Fast and Cost-effective Speculative Edge-Cloud Decoding with Early Exits

Anonymous authors
Paper under double-blind review

Abstract

Large Language Models (LLMs) enable various applications on edge devices such as smartphones, wearables, and embodied robots. However, their deployment often depends on expensive cloud-based APIs, creating high operational costs, which limit access for smaller organizations and raise sustainability concerns. Certain LLMs can be deployed on-device, offering a cost-effective solution with reduced latency and improved privacy. Yet, limited computing resources constrain the size and accuracy of models that can be deployed, necessitating a collaborative design between edge and cloud. We propose a fast and cost-effective speculative edge-cloud decoding framework with a large target model on the server and a small draft model on the device. By introducing early exits in the target model, tokens are generated mid-verification, allowing the client to preemptively draft subsequent tokens before final verification, thus utilizing idle time and enhancing parallelism between edge and cloud. Using an NVIDIA Jetson Nano (client) and an A100 GPU (server) with Vicuna-68M (draft) and Llama2-7B (target) models, our method achieves up to a 35% reduction in latency compared to cloud-based autoregressive decoding, with an additional 11% improvement from preemptive drafting. To demonstrate real-world applicability, we deploy our method on the Unitree Go2 quadruped robot using Vision-Language Model (VLM) based control, achieving a 21% speedup over traditional cloud-based autoregressive decoding. These results demonstrate the potential of our framework for real-time LLM and VLM applications on resource-constrained edge devices.

1 Introduction

Large Language Models (LLMs) have become pivotal in advancing artificial intelligence, transforming natural language processing (NLP), and enabling a wide range of applications such as chatbots, virtual assistants, robotics, translation, coding, and content generation Zeng et al. (2023); Huang et al. (2024); Sun et al. (2024); Zhang et al. (2023). Their importance lies in their ability to understand and generate human-like text, making interactions between humans and machines seamless and suggesting potential emergent capabilities Wei et al. (2022). Recent advances include large-scale models like OpenAI's GPT Radford et al. (2019); Brown (2020); Achiam et al. (2023), Meta's LLaMA Touvron et al. (2023); Dubey et al. (2024), and Google's Gemma Team et al. (2024), driving breakthroughs in applications ranging from personalized assistants to complex problem-solving across various domains.

However, running large models is costly, requiring extensive computational resources for training, often spanning thousands of GPU hours, while inference at scale demands specialized hardware to maintain responsiveness Samsi et al. (2023). This creates significant barriers for smaller organizations and researchers who rely on expensive cloud-based APIs; for example, GPT-4.1 text generation costs \$2.00/1M input tokens and \$8.00/1M output tokens at the time of writing this paper.[1]

A potential solution is deploying LLMs on edge devices, which offers benefits like low latency, faster customization, and enhanced privacy in addition to cost-effectiveness. This is especially critical for real-time robotics applications, where decisions must be made on the fly, and the server cost can add up. For example,

[1] OpenAI's API pricing as of May 2025.

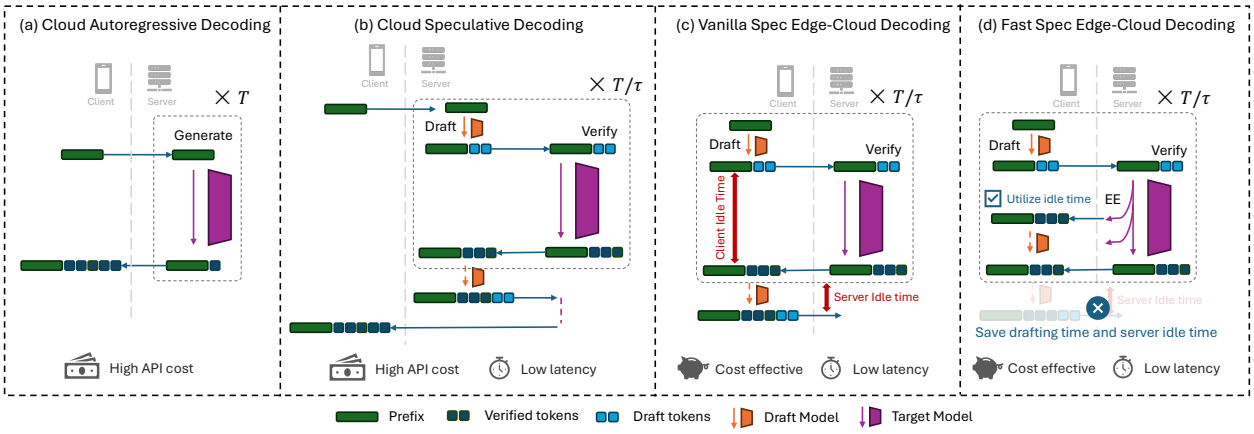

Figure 1: Illustration of traditional cloud-based autoregressive decoding versus cloud-based speculative decoding, vanilla speculative edge-cloud decoding, and the proposed preemptive drafting mechanism.

Table 1: Cost comparison between cloud autoregressive (AR) decoding and cloud speculative decoding (SD) and speculative edge-cloud decoding across different API providers on a set of candidate models. The measurement is based on 1 million requests, each consisting of 100 input tokens and 500 output tokens, assuming a draft length of $\gamma = 4$ tokens and an average of $\tau = 2.5$ accepted tokens per draft.

API Provider	Draft/Target	Cost (In/Out per 1M tokens)		API Cost		
		Draft	Target	Cloud AR	Cloud SD	Edge-cloud SD
Together AI	Qwen1.5-0.5B/Qwen1.5-72B	\$0.1/\$0.1	\$0.9/\$0.9	\$540	\$360 (33% ↓)	\$270 (**50%** ↓)
OpenRouter	llama-3.1-8b/llama-3.1-405b	\$0.02/\$0.05	\$0.9/\$0.9	\$540	\$312 (42% ↓)	\$270 (**50%** ↓)
Groq	llama3-8b-8192/llama3-70b-8192	\$0.05/\$0.08	\$0.59/\$0.79	\$454	\$286 (37% ↓)	\$217 (**52%** ↓)
OpenRouter	Qwen-2-VL-7B/Qwen-2-VL-72B	\$0.2/\$0.2	\$0.7/\$0.7	\$420	\$390 (7% ↓)	\$210 (**50%** ↓)

robotic platforms such as the Unitree Go2 quadruped are being equipped with language interfaces for real-world tasks like navigation, object interaction, and instruction following Cheng et al. (2024). However, such robots typically run on compute-constrained devices, making it infeasible to host large LLMs locally. For instance, the Unitree Go2 is powered by a Jetson Orin board with 16GB of unified memory, which is insufficient to run models over 10B parameters that require over 40GB of memory. Efficient decoding strategies like speculative decoding provide cost-effective solutions to bridge this gap. Speculative decoding Leviathan et al. (2023) uses a smaller model to generate tokens quickly, which are then verified by a larger model in parallel, significantly speeding up LLM inference. Despite its success on standalone machines, the application of speculative decoding on edge devices remains underexplored.

In this work, we propose a novel **speculative edge-cloud decoding method** to enable fast and cost-effective LLM inference at the edge. As shown in Fig. 1(a), traditional cloud-based autoregressive decoding takes a prompt from the client and performs T forward passes on the target model to generate T tokens, incurring an API cost proportional to T. Speculative decoding on the cloud (Fig. 1(b)) reduces target model calls by a factor of τ, the number of tokens generated per draft-verify round. However, it introduces additional draft model calls which comes with a non-negligible cost Yan et al. (2024). Shifting drafting to the edge can eliminate this cost. Table 1 shows potential savings for example model pairs from various API providers.[2] Speculative edge-cloud decoding can reduce costs by up to 52% over cloud autoregressive decoding.

A straightforward edge speculation and cloud verification approach (Fig. 1(c)) suffers from inefficiencies: the client remains idle during server verification, and the server is unutilized while the client drafts tokens. To address this, we propose a *preemptive* drafting mechanism to maximize client-server utilization. As shown in Fig. 1(d), we introduce early exits in the target model to produce verified tokens before full verification. These early tokens enable the client to draft the next set preemptively, a process we call *pre-drafting*. If the final verification confirms the early tokens, the next set of draft tokens is readily available for verification, minimizing idle time and keeping both client and server continuously active. Our contributions are summarized as follows:

[2]API cost as of May 2025 based on https://www.helicone.ai/llm-cost.

- We propose a novel framework that splits speculative decoding by hosting the draft model on the edge and the target model on the server, significantly reducing target model API costs.
- We introduce early exits in the target model to generate verified tokens ahead of full verification, enabling the client to preemptively draft the next tokens, minimizing idle time for both client and server.
- We conduct a comprehensive evaluation across 6 generation tasks on 3 sets of models. With Vicuna-68M as the draft model and Llama2-7B as the target model, we show an average 35% latency reduction from autoregressive to vanilla edge cloud speculative decoding and a further speedup of 11% with our fast decoding method.
- We demonstrate our approach on a real-world robotics platform (Unitree Go2 equipped with an NVIDIA Jetson Orin), highlighting the applicability of our method for enabling edge-cloud collaborative inference in embodied intelligence applications.

2 Background

Speculative Decoding: Speculative decoding follows a Draft-and-Verify approach, where each step starts with generating multiple candidate tokens, which are then verified by the target LLM in parallel, speeding up inference Leviathan et al. (2023). Formally, given an input prefix $x_{0:t}$, and a target model $\mathcal{M}_q$, a smaller draft model $\mathcal{M}_p$ generates the next γ tokens $x_{t:t+\gamma}$ and their corresponding probability distribution $p_{t:t+\gamma}$ autoregressively:

$$x_{t:t+\gamma}, p_{t:t+\gamma} = \textsc{Draft}(\mathcal{M}_p, x_{0:t}) \tag{1}$$

The target model $\mathcal{M}_q$ verifies these tokens and decides how many to accept denoted by δ ($\delta \leq \gamma$), then produces the next token:

$$x_{t:t+\delta+1} = \textsc{Verify}(\mathcal{M}_q, x_{t:t+\gamma}, p_{t:t+\gamma}) \tag{2}$$

The process repeats with the input prefix extended to $t + \delta + 1$ and passed back to the draft model for the next round.

Early Exit in Large Language Models: Early exit strategies improve the efficiency of LLMs by terminating the generation process early if a sufficiently confident output is identified Panda et al. (2016); Chen et al. (2023). Given an LLM $\mathcal{M}$ with L layers and an input sequence $x_{1:t}$, the hidden state at each layer l is computed as:

$$h^{(l)} = f^{(l)}(h^{(l-1)}, x_{1:t}), \tag{3}$$

where $h^{(0)}$ is the input embedding. At each layer l, the model calculates logits by passing the hidden state through a language model (LM) head, denoted as $\mathbf{z}^{(l)} = \text{LM}\textsc{Head}(h^{(l)})$. It also computes a confidence score $S^{(l)}$ based on the softmax probability:

$$S^{(l)} = \max\left(\text{softmax}(\mathbf{z}^{(l)})\right). \tag{4}$$

The model exits early at layer l' if the confidence score exceeds a predefined threshold, $S^{(l')} \geq \tau$, and the next token x_{t+1} is sampled from $\text{softmax}(\mathbf{z}^{(l')})$. We leverage this mechanism to generate early verified tokens in the target model, which are used to preemptively produce the next set of draft tokens.

3 Methodology

In our distributed speculative decoding setup, the client runs a lightweight *draft model*, denoted as $\mathcal{M}_p$, while the server hosts a large *target model* $\mathcal{M}_q$. As shown in Fig. 2, the algorithm takes the following sequence of steps:

Step ①: Given a prefix sequence $x_{0:t} = \{x_0, x_1, \ldots, x_t\}$, the client uses the draft model $\mathcal{M}_p$ to predict a sequence of γ draft tokens (Eq. 1). These draft tokens $x_{t:t+\gamma}$, along with their probability distributions $p_{t:t+\gamma}$ are transmitted to the server for verification by the target model $\mathcal{M}_q$.

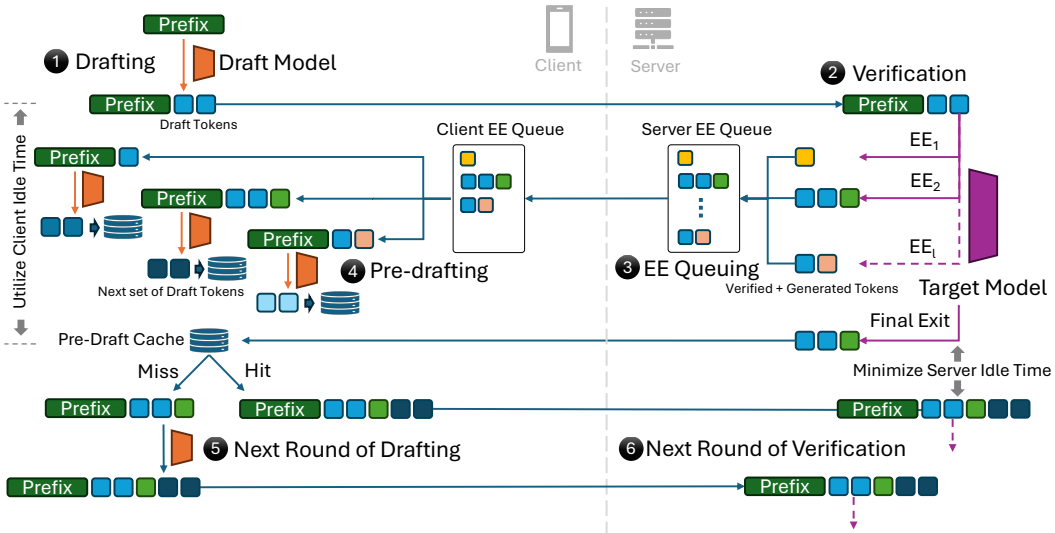

Figure 2: Illustration of our proposed approach. Given a prefix, the client generates two draft tokens and sends them to the server. The server verifies them using a target model with early exits, returning verified tokens and the next generated token. For each early exit, the client *pre-drafts* the next tokens and stores them in the pre-draft cache. If the final output matches a cache entry, the draft tokens are sent immediately, reducing latency.

Step ②: The target model $\mathcal{M}_q$ is designed with multiple early exits, denoted as $\mathcal{M}_q^{(1:n)}$. Each early exit $i \in \{1, \ldots, n\}$ performs a verification step on the draft tokens (Eq. 2) and generates the next token. For example, if the early exit i accepts $\delta^{(i)}$ tokens and generates the next token, the total generated tokens would be:

$$x_{t:t+\delta^{(i)}+1}^{(i)} = \textsc{Verify}(\mathcal{M}_q^{(i)}, x_{t:t+\gamma}, p_{t:t+\gamma}) \tag{5}$$

Here, $\delta^{(i)}$ denotes the number of draft tokens accepted by early exit i.

Step ③: Given that the communication channel is typically the bottleneck, early exit outputs are queued in the server's early exit queue as soon as they become available and are transmitted to the client sequentially.

Step ④: The client, in turn, stores the early exit outputs from the server in its own queue and processes each one in a new thread, *preemptively* generating the subsequent set of draft tokens for each early exit. This process is referred to as *pre-drafting*. For an early exit i, the newly verified/generated tokens from the server $x_{t:t+\delta^{(i)}+1}^{(i)}$ are concatenated with the original prefix $x_{1:t}$, resulting in a new prefix:

$$y_{0:t'}^{(i)} = \text{Concat}(x_{0:t}, x_{t:t+\delta^{(i)}+1}^{(i)}) \tag{6}$$

The *pre-draft* tokens represented as $y_{t':t'+\gamma}^{(i)}$ and their corresponding probabilities $p_{t':t'+\gamma}^{(i)}$, are then computed as:

$$y_{t':t'+\gamma}^{(i)}, p_{t':t'+\gamma}^{(i)} = \textsc{PreDraft}(\mathcal{M}_p, y_{0:t'}^{(i)}) \tag{7}$$

These pre-drafted tokens are subsequently stored in a cache referred to as the pre-draft cache.

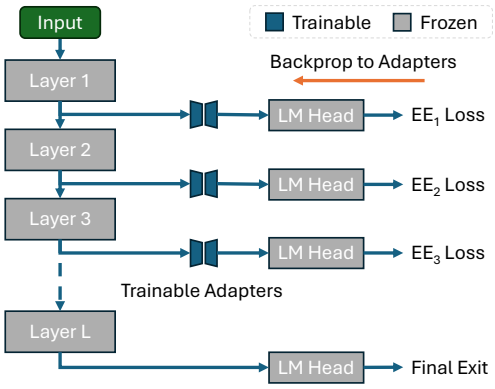

Figure 3: Illustration of training early exit adapters.

Steps ⑤ & ⑥: Once the final output $x_{t:t+\delta+1}$ from the target model is received, the client checks whether these tokens were already processed in any of the early exits by looking at the pre-draft cache. If there is a hit, the corresponding pre-draft tokens are retrieved from the pre-draft cache and immediately sent to the server for the next round of verification, avoiding any delay. If it is a miss, a new set of draft tokens is generated following the usual drafting process. The server proceeds with the next round of verification over the new set of draft tokens.

Table 2: Early Exit training details. # Params and % Params denote the total number of trainable adapter parameters and their fraction compared to total model parameters respectively.

Model	# Exits	# Params	% Params	Context	GPU Hours
lmsys/Vicuna-7B-v1.3 Zheng et al. (2023)	31	101M	1.48	1600	117
lmsys/Vicuna-13B-v1.3 Zheng et al. (2023)	39	158M	1.20	800	122
meta-llama/Llama-2-7B-hf Touvron et al. (2023)	31	101M	1.48	1600	119
Qwen/Qwen2-VL-7B-Instruct Wang et al. (2024)	27	88M	1.02	1600	136

Table 3: Notations used in our analysis.

Notation	**Description**
T_p :	Time for a single forward pass of the draft model $\mathcal{M}_p$
T_q :	Time for a forward pass of the target model $\mathcal{M}_q$
T_c :	Communication latency between the client and server
c :	Latency ratio between the draft and target models (T_p/T_q)
γ :	Number of draft tokens
τ :	Effective number of tokens generated per draft-verify round (# accepted tokens + 1 generated).
n :	Total number of tokens generated
r :	Cache miss rate
T_r :	Latency of thread synchronization on cache hit

This design enhances efficiency by leveraging the client's idle time for pre-drafting and reducing the server's idle time between verification rounds whenever there is a pre-draft cache hit. Importantly, the output is identical to that of standard speculative decoding since all tokens are verified at the final exit of the target model, guaranteeing no loss in accuracy. For detailed system design and pseudocode please refer to Appendix A.

Early Exit Training: We add adapter layers after each layer of the target model to train the early exits, as shown in Fig. 3. Each adapter connects to the language model (LM) head, and its loss is backpropagated to update only that adapter. This minimizes trainable parameters while preserving the original model. For language generation models, we train early exit adapters on the publicly available ShareGPT conversation dataset (hf:RyokoAI/ShareGPT52K) using a single NVIDIA A100 GPU with 80GB of VRAM. We fine-tune three models—Vicuna-7B, Vicuna-13B, and Llama2-7B—for 10 epochs each, using a batch size of 1 and a learning rate of 1e-4. Additionally, we train early exit adapters for a vision-language model based on Qwen2VL-7B using the Spacellava dataset (hf:remyxai/vqasynth_spacellava) which is generated by open source implementation of SpatialVLM Chen et al. (2024). Table 2 summarizes the number of early exits, total training time, and the number of trainable parameters for each model. Note that the context length was reduced during training to ensure compatibility with the memory limitations of a single A100 GPU.

4 Experiments

Models and Benchmarks: Following the standard speculative decoding literature Li et al. (2024), we evaluate our method on three model sets: Vicuna-68M/Vicuna-7B, Vicuna-160M/Vicuna-13B, and Vicuna-68M/Llama2-7B. We show the experiments on 6 standard generative task benchmarks spanning conversation Zheng et al. (2023), code generation Chen et al. (2021), mathematical reasoning Cobbe et al. (2021), instruction following Taori et al. (2023), summarization Nallapati et al. (2016), and question-answering tasks Kwiatkowski et al. (2019).

Server Side Hardware: We utilize a high performance computing cluster node equipped with a single A100 GPU with 80GB VRAM, 16 CPU cores, and 8GB of CPU memory per core as our server.

Client Side Hardware: We demonstrate our system on two types of client devices:

1. NVIDIA Jetson Nano: A compact AI development board tailored for edge computing. It includes a quad-core ARM Cortex-A57 CPU, a 128-core Maxwell GPU, and 4GB of LPDDR4 RAM shared

between the CPU and GPU. With a performance of up to 472 GFLOPs, the Jetson Nano is ideal for edge applications.

2. Cluster Node with RTX 2080 Ti: This setup features a single RTX 2080 Ti GPU with 12GB VRAM, an 8-core CPU, and 4GB of RAM per core, providing a more powerful alternative for our experiments.

Communication: Communication between cluster nodes is facilitated by InfiniBand high-speed interconnect. Ethernet is used for communication between the cluster node and the Jetson Nano.

Latency Calculation: Table 3 summarizes the notations used in our analysis. Key variables include T_q, T_p, and T_c, representing latencies of the target model, draft model, and communication, respectively. Speculative decoding metrics include τ, the effective tokens per draft-verification round. Hyperparameters are n, the total tokens, and γ, tokens per draft-verification round. Additional factors for our fast speculative decoding method include the cache miss rate r and synchronization latency T_r for cache hits. The latency calculation for autoregressive (AR) decoding, vanilla speculative edge-cloud decoding (SD), and our fast speculative edge-cloud decoding (FSD) are presented in Table 4. The latency of FSD method depends on the cache miss rate, r. In case of a cache hit, threads must synchronize, incurring a latency of T_r. Unless otherwise specified, we use $\gamma = 4$ and $n = 200$ in our experiments.

Table 4: Latency calculation. AR denotes cloud-based autoregressive decoding. SD and FSD refer to vanilla and fast speculative edge-cloud decoding, respectively.

Method	**Latency**
Cloud AR	$2T_c + nT_q$
Edge-Cloud SD	$\frac{n}{\tau}(2T_c + \gamma T_p + T_q)$
Edge-Cloud FSD	$\frac{n}{\tau}(2T_c + r\gamma T_p + (1-r)T_r + T_q)$

4.1 System Metrics

We report the system metrics in Table 5, including drafting latency (γT_p) at $\gamma = 4$, verification latency (T_q), the latency ratio c, and communication latency (T_c). On the Jetson Nano, drafting is about three times slower and communication twice as slow as on a cluster node with an RTX GPU. We report the maximum GPU VRAM and the number of early-exit threads supported by the system. On the RTX-equipped node, the system handles up to 30 threads for the Vicuna-68M model, but GPU VRAM (12 GB) limits the Vicuna-160M model to 15 threads before encountering an out-of-memory (OOM) error. On the Jetson Nano, both CPU threading and RAM are bottlenecks. The maximum number of threads is capped at 15 for the Vicuna-68M model, while the 4 GB memory limit allows only 7 threads for the Vicuna-160M model.

Table 5: Average system metrics that are dataset agnostic.

Metric	**Vicuna-68m/Vicuna-7B**		**Vicuna-160m/Vicuna-13B**		**Vicuna-68m/Llama2-7B**	
	Jetson	RTX	Jetson	RTX	Jetson	RTX
Drafting Latency ($\gamma T_p, \gamma = 4$)	334ms	102ms	1596ms	555ms	301ms	99ms
Verification Latency (T_q)	497ms	442ms	616ms	618ms	522ms	467ms
Latency Ratio ($c = T_p/T_q$)	0.17	0.06	0.65	0.22	0.14	0.05
Communication Latency (T_c)	95ms	42ms	91ms	46ms	96ms	47ms
Max GPU memory	1.7G	3.2G	3.5G	8.9G	1.7G	3.2G
Num EE Threads	15	30	7	15	15	30

4.2 Speedup Results

Evaluation Metrics: Our fast decoding method with early exit is exact, with outputs identical to standard speculative decoding, ensuring **no loss in accuracy**. We define the following metrics to evaluate our method.

- **Speedup AR $\rightarrow$ SD**: Latency savings of vanilla speculative edge-cloud decoding (SD) compared to cloud based autoregressive (AR) baseline.
- **Speedup SD $\rightarrow$ FSD**: Latency savings of our fast speculative edge-cloud decoding (FSD) compared to the vanilla speculative edge-cloud decoding (SD).

Table 6: Speedup evaluation on standard language benchmark datasets.

Benchmark	**Metric**	**Vicuna-68m/Vicuna-7B**		**Vicuna-160m/Vicuna-13B**		**Vicuna-68m/Llama2-7B**	
		Jetson	RTX	Jetson	RTX	Jetson	RTX
MT-bench	Speedup AR $\rightarrow$ SD	0.70x	1.30x	0.42x	0.97x	1.34x	2.01x
	Speedup SD $\rightarrow$ FSD	1.04x	1.04x	1.05x	1.09x	1.07x	1.02x
	Avg Tokens τ	2.30	2.01	2.28	2.98	4.12	3.48
	Cache miss rate	60.92%	20.07%	62.49%	16.40%	36.73%	13.38%
	Avg EE	8	13	9	15	9	11
HumanEval	Speedup AR $\rightarrow$ SD	0.79x	1.42x	0.47x	0.85x	1.53x	2.09x
	Speedup SD $\rightarrow$ FSD	1.04x	1.03x	1.06x	1.15x	1.22x	1.07x
	Avg Tokens τ	2.04	2.66	2.14	2.04	4.16	3.83
	Cache miss rate	64.73%	15.79%	57.64%	25.16%	17.6%	1.75%
	Avg EE	7	16	8	14	4	3
GSM8K	Speedup AR $\rightarrow$ SD	0.63x	1.11x	0.40x	0.77x	1.15x	1.69x
	Speedup SD $\rightarrow$ FSD	1.04x	1.08x	1.06x	1.13x	1.07x	1.06x
	Avg Tokens τ	2.08	1.96	2.23	2.29	3.48	3.29
	Cache miss rate	61.21%	12.40%	58.04%	18.37%	41.87%	9.55%
	Avg EE	8	13	9	14	7	10
Alpaca	Speedup AR $\rightarrow$ SD	0.63x	1.06x	0.42x	0.74x	1.42x	1.99x
	Speedup SD $\rightarrow$ FSD	1.04x	1.07x	1.05x	1.12x	1.10x	1.18x
	Avg Tokens τ	2.09	1.96	2.32	2.36	4.29	3.62
	Cache miss rate	64.60%	19.29%	60.94%	25.45%	36.60%	4.28%
	Avg EE	8	14	8	14	9	2
CNN/DM	Speedup AR $\rightarrow$ SD	0.72x	1.20x	0.38x	0.73x	1.41x	1.91x
	Speedup SD $\rightarrow$ FSD	1.03x	1.07x	1.03x	1.07x	1.07x	1.04x
	Avg Tokens τ	2.32	1.95	2.08	2.10	4.32	3.43
	Cache miss rate	70.70%	29.40%	69.92%	38.09%	47.13%	13.97%
	Avg EE	10	15	8	16	14	13
NQ	Speedup AR $\rightarrow$ SD	0.65x	1.10x	0.46x	0.82x	1.26x	1.93x
	Speedup SD $\rightarrow$ FSD	1.02x	1.06x	1.04x	1.12%	1.05x	1.01x
	Avg Tokens τ	2.08	2.05	2.44	2.62	3.83	3.62
	Cache miss rate	71.50%	22.59%	63.25%	30.25%	57.11%	14.88%
	Avg EE	8	14	8	15	13	14
Average	**Speedup AR $\rightarrow$ SD ($\uparrow$)**	0.69x	1.20x	0.42x	0.94x	1.35x	**1.94x**
	Speedup SD $\rightarrow$ FSD ($\uparrow$)	1.04x	1.06x	1.05x	1.10x	**1.11x**	1.06x
	Avg Tokens τ ($\uparrow$)	2.15	2.10	2.25	2.40	**4.03**	3.54
	Cache miss rate ($\downarrow$)	65.61%	19.59%	62.05%	27.95%	39.94%	**9.63%**
	Avg EE ($\downarrow$)	**8**	14	**8**	14	9	9

- **Cache miss rate (lower the better)**: Frequency of cache misses, that indicates how often we fail to find the final output in one of the early exits.
- **Average Early Exit (lower the better)**: The average early exit that produces the same output as the final exit.

Table 6 presents the evaluation metrics on the benchmark datasets. In addition to the aforementioned evaluation metrics, the effective number of generated tokens per verification (τ) is also reported. Note, τ remains identical to that of vanilla SD as our FSD method produces identical outputs but it highlights the reduction in API call costs.

AR $\rightarrow$ SD: On average, using RTX, vanilla SD achieves a 1.2x and 1.94x speedup over autoregressive decoding with the Vicuna-68M/Vicuna-7B and Vicuna-68M/Llama2-7B models, respectively. However, it results in a marginal slowdown with Vicuna-160M/Vicuna-13B. Jetson, being slower at drafting coupled with higher communication cost, reduces the speedup relative to autoregressive decoding, making it slower for Vicuna-68M/Vicuna-7B and Vicuna-160M/Vicuna-13B models, though it achieves a 1.34x speedup with Vicuna-68M/Llama2-7B. The speedup from autoregressive to SD primarily depends on c, τ, and T_c, with ideally requiring low values of c and T_c and a high τ. Since Jetson has a high c and T_c, it underperforms compared to autoregressive on Vicuna-68M/Vicuna-7B and Vicuna-160M/Vicuna-13B models. In contrast, for Vicuna-68M/Llama2-7B, a lower c combined with a higher τ yields a 1.35x speedup.

SD $\rightarrow$ FSD: Our FSD provides consistent speedup over vanilla SD across all datasets on both RTX and Jetson. On the RTX client, it achieves average speedups of 1.06x, 1.10x, and 1.06x for Vicuna-68M/Vicuna-7B, Vicuna-160M/Vicuna-13B, and Vicuna-68M/Llama2-7B, respectively. Similarly, on Jetson Nano, the speedups

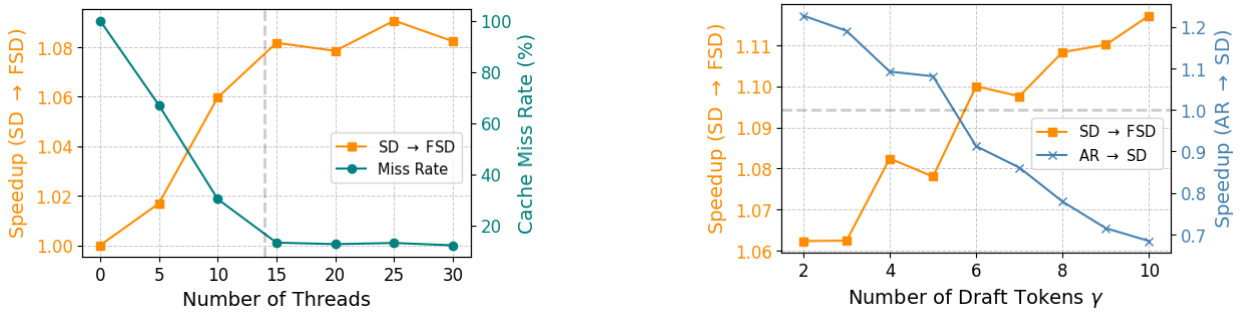

(a) Effect of number of early exit threads.

(b) Effect of number of draft tokens (γ).

Figure 4: Ablation studies: (a) Effect of varying the number of early exit threads, (b) Effect of varying the number of draft tokens (γ).

are 1.04x, 1.06x, and 1.11x for the same model pairs. The primary benefit of FSD lies in its *pre-drafting* mechanism, which enables these improvements over vanilla SD. This mechanism's impact is reflected in the cache miss rate, indicating how often the final output is available through early exits, allowing pre-drafting of the next set of tokens. The average early exit metric further highlights how quickly verified tokens are obtained, enabling efficient generation of subsequent draft tokens.

4.3 Ablation Studies

Effect of Number of Threads: In Figure 4a, we show the speedup of our FSD relative to vanilla SD and the cache miss rate as the number of early exit threads increases up to 30. Using the GSM8K dataset with the Vicuna-68M/Vicuna-7B models on an RTX client, we find that the cache miss rate decreases as more threads are added, improving speedup. However, after around 15 threads, the speedup begins to plateau, and further increases in thread count yield minimal additional speedup. This is because the priority queues process the most promising early exits first, making it more likely to match the final output with the initial threads rather than the later ones.

Effect of γ: The number of tokens, γ, significantly influences the efficiency of speculative decoding. In Fig. 4b, we plot speedup between SD and FSD, and between autoregressive (AR) and SD, as γ increases up to 10. We use the GSM8K dataset with the Vicuna-68M/Vicuna-7B models on an RTX-based client. Our FSD method shows greater latency improvements compared to vanilla SD as γ increases, enhancing the benefits of pre-drafting. However, an excessively large γ can hinder the speculative decoding process, causing the overall speedup to decrease. As shown, the speedup of SD relative to AR falls below 1x when γ exceeds 5.

Importance of Priority Queue: Since our system is asynchronous, we need queues for graceful operation. Further, we organize the queues in priority, determined by the confidence score of the generated token (Eq. 4). This prioritization is especially beneficial when the number of threads is limited. Table 7 presents an ablation study comparing different queue configurations. On the server side, we use either a priority queue or a FIFO queue, while on the client side, we also include a random queue as an option. We report the cache miss rate (r) for systems with 3, 5, and 10 threads, denoted as 3T, 5T, and 10T, respectively.

Table 7: Ablation study of client-server queue strategies. r indicates the average response time (lower is better) for different queue lengths.

Client	Server	r (3T)	r (5T)	r (10T)
Priority	Priority	**79.85**	**62.93**	27.57
	FIFO	80.40	63.48	27.73
Random	Priority	82.32	63.25	**26.92**
	FIFO	84.56	65.36	27.68
FIFO	Priority	82.61	64.43	27.69
	FIFO	85.43	65.67	27.84

Our findings indicate that when the server uses a priority queue, it significantly improves performance for any given queue type on the client, although this benefit decreases with a higher thread count. On the client side, a priority queue consistently outperforms both the random and FIFO queues.

Figure 5: Example run of the Unitree Go2 robot performing an object-finding task using vision-language-based control. The robot receives the instruction *"find the silver bottle"* and navigates the environment while distinguishing the correct object from a similar distractor.

Table 8: System-level evaluation metrics for our edge-cloud speculative decoding setup on the Unitree Go2 robot (Jetson Orin) and A100 server. (a) Reports core system and latency metrics. (b) Summarizes the performance gains with our FSD method.

Metric	**Value**
Drafting Latency (γT_p, $\gamma = 4$)	288ms
Verification Latency (T_q)	620ms
Latency Ratio ($c = T_p/T_q$)	0.11
Communication Latency (T_c)	120ms
Max GPU Memory	12.4G
Num EE Threads	6

(a) System and latency metrics

Metric	**Value**
Avg Tokens (τ) (↑)	2.92
Cache Miss Rate (↓)	55.63
Avg EE (↓)	8
Speedup AR → SD (↑)	0.90x
Speedup SD → FSD (↑)	**1.34x**

(b) FSD speedup and performance metrics

4.4 Robotics Case Study: Vision-Language Navigation on Unitree Go2

To evaluate the real-world applicability of our approach, we deploy the edge-cloud speculative decoding system on the Unitree Go2 EDU quadruped robot. This platform features an onboard NVIDIA Jetson Orin board, which includes an 8-core ARM Cortex-A78AE v8.2 64-bit CPU and 16GB of 128-bit LPDDR5 unified memory, offering up to 157 TOPS of compute. Communication between the robot and the server is established over Wi-Fi 6.

The robot receives natural language instructions such as "go to the red chair" or "turn left at the hallway" and uses its front-facing RGB camera to perceive the environment. A vision-language model (VLM) processes the visual observations and language commands to generate mid-level navigation actions (e.g., move forward small/medium/large), following the approach of Cheng et al. (2024). These actions are then executed by the robot's onboard controller. To enhance decision quality and interpretability, we additionally prompt the VLM to provide reasoning alongside its action outputs.

We deploy a quantized version of Qwen-2-VL-2B as the on-device draft model and offload token verification to the full-size Qwen-2-VL-7B model hosted on an A100 GPU in the cloud. Figure 5 illustrates an example scenario in which the robot is instructed to locate a specific object—in this case, a silver bottle. To test the model's reasoning and grounding capabilities, we introduce a distractor object of similar appearance. The robot successfully navigates the environment and identifies the correct object, demonstrating the effectiveness of our method on a vision-language-based control task.

Table 8(a) reports key system-level metrics from our deployment, including drafting and verification latencies, communication overhead, and peak GPU memory usage. Table 8(b) highlights the performance improvements enabled by our method, showing speedups from standard autoregressive decoding (AR) to edge-cloud speculative decoding (SD) and further to Fast Speculative Decoding (FSD). It also includes average accepted tokens per round, cache miss rate, and average early exits. Overall, our system achieves a **21%** speedup over conventional cloud-based autoregressive decoding, validating the practicality of our approach for real-time, language-conditioned robot control on resource-constrained edge platforms.

5 Related Work

There is a significant interest in enabling edge devices to run LLMs. The deployment of collaborative AI inference systems across the edge and the cloud introduces unique challenges such as latency constraints,

bandwidth limitations, and inconsistent network conditions. One straightforward approach is to design smaller models Lu et al. (2024). While all the popular class of models such as OPT Zhang et al. (2022), Llama Touvron et al. (2023); Dubey et al. (2024), and Gemma Team et al. (2024) have smaller scale models, they are either not small enough to run on an edge device or not accurate enough to reliably deploy in practical applications. Quantization is one of the heavily focused methods to enable on-device LLMs Lin et al. (2024). Yu et al. (2024) aim to compress the models with layer-wise pruning and quantization to enable edge LLMs. Qu et al. (2024) discuss an approach of enabling LLMs to run on 6g edge devices. On system side, Xu et al. (2024a) focus on leveraging on-device Neural Processing Unit (NPU).

Early exit strategies, which allow intermediate layers of deep networks to make predictions without waiting for the full forward pass, have been extensively explored for resource-constrained devices. Pioneering works such as Conditional Deep Learning Panda et al. (2016) and BranchyNet Teerapittayanon et al. (2016) introduced the idea of adding multiple exit points to deep neural networks to reduce computation time. Recent research has also explored layer skipping in LLMs for enhanced efficiency Fan et al. (2024), with dynamic compute allocation based on tokens Raposo et al. (2024). In terms of multi-device speculative decoding, McDanel (2024) has recently shown that asynchronous speculative decoding over multiple GPUs can be beneficial. However, it uses shared memory to communicate between devices, so it is not directly applicable to edge-cloud scenarios. To the best of our knowledge, this is the first work to show end-to-end speculative decoding with models split between edge and cloud. Further, we comprehensively analyze and demonstrate the system-level trade-offs during the implementation of collaborative edge-cloud decoding, which no prior work has investigated.

6 Conclusion and Discussion

We introduced a novel speculative edge-cloud decoding framework, offering a cost-effective alternative to traditional cloud-based deployment. By distributing the draft and target models between edge and server environments, our solution significantly reduces high API costs. Early exits and pre-drafting allow us to enhance parallelism by leveraging idle client time and reducing server idle time. Our comprehensive end-to-end evaluation on the NVIDIA Jetson Nano highlights the feasibility of efficient edge-cloud collaborative LLM inference on resource-limited edge devices. On Jetson Nano, speculative edge-cloud decoding achieves up to a 35% speedup over cloud-based autoregressive decoding, with up to an additional 11% performance gain enabled by pre-drafting and early exits. Further, we validate our approach with execution of vision language models on the Unitree Go2 quadruped robot. We achieve an overall 21% speedup over standard cloud-based autoregressive decoding, demonstrating the effectiveness and real-world applicability of our framework for robotics use cases.

Our method operates effectively without making assumptions about communication delays, and we show that it remains practical under real-world conditions. While communication latency can be a limiting factor in extreme cases, our use of priority queues helps optimize bandwidth usage. For scenarios with constrained network conditions, further tuning and adaptive scheduling policies offer promising avenues to enhance performance. Similarly, while pre-drafting leverages idle client time for parallelism, it introduces modest compute overhead on the client. This is manageable for most edge platforms, and the ability to scale the number of threads provides a flexible trade-off between latency and energy efficiency, especially for battery-powered devices.

Our proof-of-concept is implemented in Python, which, while convenient for experimentation, leaves room for further optimization. A low-level C++ implementation with shared memory could substantially improve performance, making the system even more suitable for latency-sensitive applications. Currently, our system supports single-client interaction with the server, but extending it to support multi-client concurrency is a natural next step. We envision future work enabling scalable, concurrent edge-cloud inference with early exits, making our approach even more applicable to real-world deployment scenarios.

References

Josh Achiam, Steven Adler, Sandhini Agarwal, Lama Ahmad, Ilge Akkaya, Florencia Leoni Aleman, Diogo Almeida, Janko Altenschmidt, Sam Altman, Shyamal Anadkat, et al. Gpt-4 technical report. *arXiv preprint*

arXiv:2303.08774, 2023.

Mohammed Banafaa, Ibraheem Shayea, Jafri Din, Marwan Hadri Azmi, Abdulaziz Alashbi, Yousef Ibrahim Daradkeh, and Abdulraqeb Alhammadi. 6g mobile communication technology: Requirements, targets, applications, challenges, advantages, and opportunities. *Alexandria Engineering Journal*, 64:245–274, 2023.

Tom B Brown. Language models are few-shot learners. *arXiv preprint arXiv:2005.14165*, 2020.

Boyuan Chen, Zhuo Xu, Sean Kirmani, Brain Ichter, Dorsa Sadigh, Leonidas Guibas, and Fei Xia. Spatialvlm: Endowing vision-language models with spatial reasoning capabilities. In *Proceedings of the IEEE/CVF Conference on Computer Vision and Pattern Recognition*, pp. 14455–14465, 2024.

Mark Chen, Jerry Tworek, Heewoo Jun, Qiming Yuan, Henrique Ponde De Oliveira Pinto, Jared Kaplan, Harri Edwards, Yuri Burda, Nicholas Joseph, Greg Brockman, et al. Evaluating large language models trained on code. *arXiv preprint arXiv:2107.03374*, 2021.

Yanxi Chen, Xuchen Pan, Yaliang Li, Bolin Ding, and Jingren Zhou. Ee-llm: Large-scale training and inference of early-exit large language models with 3d parallelism. *arXiv preprint arXiv:2312.04916*, 2023.

An-Chieh Cheng, Yandong Ji, Zhaojing Yang, Zaitian Gongye, Xueyan Zou, Jan Kautz, Erdem Bıyık, Hongxu Yin, Sifei Liu, and Xiaolong Wang. Navila: Legged robot vision-language-action model for navigation. *arXiv preprint arXiv:2412.04453*, 2024.

Karl Cobbe, Vineet Kosaraju, Mohammad Bavarian, Mark Chen, Heewoo Jun, Lukasz Kaiser, Matthias Plappert, Jerry Tworek, Jacob Hilton, Reiichiro Nakano, et al. Training verifiers to solve math word problems. *arXiv preprint arXiv:2110.14168*, 2021.

Abhimanyu Dubey, Abhinav Jauhri, Abhinav Pandey, Abhishek Kadian, Ahmad Al-Dahle, Aiesha Letman, Akhil Mathur, Alan Schelten, Amy Yang, Angela Fan, et al. The llama 3 herd of models. *arXiv preprint arXiv:2407.21783*, 2024.

Siqi Fan, Xin Jiang, Xiang Li, Xuying Meng, Peng Han, Shuo Shang, Aixin Sun, Yequan Wang, and Zhongyuan Wang. Not all layers of llms are necessary during inference. *arXiv preprint arXiv:2403.02181*, 2024.

Othmane Friha, Mohamed Amine Ferrag, Burak Kantarci, Burak Cakmak, Arda Ozgun, and Nassira Ghoualmi-Zine. Llm-based edge intelligence: A comprehensive survey on architectures, applications, security and trustworthiness. *IEEE Open Journal of the Communications Society*, 2024.

Kaiyu Huang, Fengran Mo, Hongliang Li, You Li, Yuanchi Zhang, Weijian Yi, Yulong Mao, Jinchen Liu, Yuzhuang Xu, Jinan Xu, et al. A survey on large language models with multilingualism: Recent advances and new frontiers. *arXiv preprint arXiv:2405.10936*, 2024.

Tom Kwiatkowski, Jennimaria Palomaki, Olivia Redfield, Michael Collins, Ankur Parikh, Chris Alberti, Danielle Epstein, Illia Polosukhin, Jacob Devlin, Kenton Lee, et al. Natural questions: a benchmark for question answering research. *Transactions of the Association for Computational Linguistics*, 7:453–466, 2019.

Yaniv Leviathan, Matan Kalman, and Yossi Matias. Fast inference from transformers via speculative decoding. In *International Conference on Machine Learning*, pp. 19274–19286. PMLR, 2023.

Yuhui Li, Fangyun Wei, Chao Zhang, and Hongyang Zhang. Eagle-2: Faster inference of language models with dynamic draft trees. *arXiv preprint arXiv:2406.16858*, 2024.

Ji Lin, Jiaming Tang, Haotian Tang, Shang Yang, Wei-Ming Chen, Wei-Chen Wang, Guangxuan Xiao, Xingyu Dang, Chuang Gan, and Song Han. Awq: Activation-aware weight quantization for on-device llm compression and acceleration. *Proceedings of Machine Learning and Systems*, 6:87–100, 2024.

Zheng Lin, Guanqiao Qu, Qiyuan Chen, Xianhao Chen, Zhe Chen, and Kaibin Huang. Pushing large language models to the 6g edge: Vision, challenges, and opportunities. *arXiv preprint arXiv:2309.16739*, 2023.

Zhenyan Lu, Xiang Li, Dongqi Cai, Rongjie Yi, Fangming Liu, Xiwen Zhang, Nicholas D Lane, and Mengwei Xu. Small language models: Survey, measurements, and insights. *arXiv preprint arXiv:2409.15790*, 2024.

Bradley McDanel. Amusd: Asynchronous multi-device speculative decoding for llm acceleration. *arXiv preprint arXiv:2410.17375*, 2024.

Ramesh Nallapati, Bowen Zhou, Caglar Gulcehre, Bing Xiang, et al. Abstractive text summarization using sequence-to-sequence rnns and beyond. *arXiv preprint arXiv:1602.06023*, 2016.

Priyadarshini Panda, Abhronil Sengupta, and Kaushik Roy. Conditional deep learning for energy-efficient and enhanced pattern recognition. In *2016 design, automation & test in europe conference & exhibition (DATE)*, pp. 475–480. IEEE, 2016.

Guanqiao Qu, Qiyuan Chen, Wei Wei, Zheng Lin, Xianhao Chen, and Kaibin Huang. Mobile edge intelligence for large language models: A contemporary survey. *arXiv preprint arXiv:2407.18921*, 2024.

Alec Radford, Jeffrey Wu, Rewon Child, David Luan, Dario Amodei, Ilya Sutskever, et al. Language models are unsupervised multitask learners. *OpenAI blog*, 1(8):9, 2019.

David Raposo, Sam Ritter, Blake Richards, Timothy Lillicrap, Peter Conway Humphreys, and Adam Santoro. Mixture-of-depths: Dynamically allocating compute in transformer-based language models. *arXiv preprint arXiv:2404.02258*, 2024.

Siddharth Samsi, Dan Zhao, Joseph McDonald, Baolin Li, Adam Michaleas, Michael Jones, William Bergeron, Jeremy Kepner, Devesh Tiwari, and Vijay Gadepally. From words to watts: Benchmarking the energy costs of large language model inference. In *2023 IEEE High Performance Extreme Computing Conference (HPEC)*, pp. 1–9. IEEE, 2023.

Qiushi Sun, Zhirui Chen, Fangzhi Xu, Kanzhi Cheng, Chang Ma, Zhangyue Yin, Jianing Wang, Chengcheng Han, Renyu Zhu, Shuai Yuan, et al. A survey of neural code intelligence: Paradigms, advances and beyond. *arXiv preprint arXiv:2403.14734*, 2024.

Rohan Taori, Ishaan Gulrajani, Tianyi Zhang, Yann Dubois, Xuechen Li, Carlos Guestrin, Percy Liang, and Tatsunori B Hashimoto. Stanford alpaca: An instruction-following llama model, 2023.

Gemma Team, Thomas Mesnard, Cassidy Hardin, Robert Dadashi, Surya Bhupatiraju, Shreya Pathak, Laurent Sifre, Morgane Rivière, Mihir Sanjay Kale, Juliette Love, et al. Gemma: Open models based on gemini research and technology. *arXiv preprint arXiv:2403.08295*, 2024.

Surat Teerapittayanon, Bradley McDanel, and Hsiang-Tsung Kung. Branchynet: Fast inference via early exiting from deep neural networks. In *2016 23rd international conference on pattern recognition (ICPR)*, pp. 2464–2469. IEEE, 2016.

Hugo Touvron, Louis Martin, Kevin Stone, Peter Albert, Amjad Almahairi, Yasmine Babaei, Nikolay Bashlykov, Soumya Batra, Prajjwal Bhargava, Shruti Bhosale, et al. Llama 2: Open foundation and fine-tuned chat models. *arXiv preprint arXiv:2307.09288*, 2023.

Peng Wang, Shuai Bai, Sinan Tan, Shijie Wang, Zhihao Fan, Jinze Bai, Keqin Chen, Xuejing Liu, Jialin Wang, Wenbin Ge, et al. Qwen2-vl: Enhancing vision-language model's perception of the world at any resolution. *arXiv preprint arXiv:2409.12191*, 2024.

Jason Wei, Yi Tay, Rishi Bommasani, Colin Raffel, Barret Zoph, Sebastian Borgeaud, Dani Yogatama, Maarten Bosma, Denny Zhou, Donald Metzler, et al. Emergent abilities of large language models. *arXiv preprint arXiv:2206.07682*, 2022.

Daliang Xu, Hao Zhang, Liming Yang, Ruiqi Liu, Gang Huang, Mengwei Xu, and Xuanzhe Liu. Empowering 1000 tokens/second on-device llm prefilling with mllm-npu. *arXiv preprint arXiv:2407.05858*, 2024a.

Minrui Xu, Dusit Niyato, Jiawen Kang, Zehui Xiong, Shiwen Mao, Zhu Han, Dong In Kim, and Khaled B Letaief. When large language model agents meet 6g networks: Perception, grounding, and alignment. *IEEE Wireless Communications*, 2024b.

Minghao Yan, Saurabh Agarwal, and Shivaram Venkataraman. Decoding speculative decoding. *arXiv preprint arXiv:2402.01528*, 2024.

Zhongzhi Yu, Zheng Wang, Yuhan Li, Haoran You, Ruijie Gao, Xiaoya Zhou, Sreenidhi Reedy Bommu, Yang Katie Zhao, and Yingyan Celine Lin. Edge-llm: Enabling efficient large language model adaptation on edge devices via layerwise unified compression and adaptive layer tuning and voting. *arXiv preprint arXiv:2406.15758*, 2024.

Fanlong Zeng, Wensheng Gan, Yongheng Wang, Ning Liu, and Philip S Yu. Large language models for robotics: A survey. *arXiv preprint arXiv:2311.07226*, 2023.

Mingjin Zhang, Jiannong Cao, Xiaoming Shen, and Zeyang Cui. Edgeshard: Efficient llm inference via collaborative edge computing. *arXiv preprint arXiv:2405.14371*, 2024.

Susan Zhang, Stephen Roller, Naman Goyal, Mikel Artetxe, Moya Chen, Shuohui Chen, Christopher Dewan, Mona Diab, Xian Li, Xi Victoria Lin, et al. Opt: Open pre-trained transformer language models. *arXiv preprint arXiv:2205.01068*, 2022.

Ziyin Zhang, Chaoyu Chen, Bingchang Liu, Cong Liao, Zi Gong, Hang Yu, Jianguo Li, and Rui Wang. A survey on language models for code. *arXiv preprint arXiv:2311.07989*, 2023.

Lianmin Zheng, Wei-Lin Chiang, Ying Sheng, Siyuan Zhuang, Zhanghao Wu, Yonghao Zhuang, Zi Lin, Zhuohan Li, Dacheng Li, Eric Xing, et al. Judging llm-as-a-judge with mt-bench and chatbot arena. *Advances in Neural Information Processing Systems*, 36:46595–46623, 2023.

A System Design

Client: On the client side, the primary goal is to maximize idle time usage and increase cache hit rates. As shown in Algorithm 1, the client maintains a priority queue Q_p, a pre-draft cache C, and a RECEIVER thread. After sending draft tokens to the server for verification, the RECEIVER thread listens for server callbacks, which provide outputs from early exits.

Since the client's bottleneck lies in the processing power required for generating pre-draft tokens, it is essential to prioritize the handling of early exit outputs. The priority queue Q_p organizes these outputs according to their confidence levels (Eq. 4), prioritizing the most promising ones for pre-drafting. It is populated asynchronously as early exit outputs are received by the client. If the client's device has multiple available threads, it can process several early exits in parallel to generate more pre-draft tokens. All the pre-draft tokens are stored in the pre-draft cache. Once the client receives the final exit output, it checks the pre-draft cache for the corresponding tokens. If there is a cache hit, the pre-drafted tokens are sent to the server immediately for the next verification round.

Server: As detailed in Algorithm 2. the server consists of two asynchronous threads: LISTENER and SENDER. The LISTENER processes the verification requests from the client. It takes in the prefix $x_{1:t}$, draft tokens $x_{t:t+\gamma}$, and their corresponding probability distribution $p_{1:\gamma}$.

As shown in Fig. 2, communication typically becomes the bottleneck in the server as early exit outputs are produced faster than the network can transmit. Early exit outputs are placed in a queue on the server side and transmitted sequentially to handle this. Let Q_e represent the server-side queue storing the early exit outputs:

$$Q_e = \{x^{(1)}_{t:t+\delta^{(1)}+1}, \ldots, x^{(L)}_{t:t+\delta^{(L)}+1}\}. \tag{8}$$

Asynchronously, the SENDER thread sends the early exit outputs from the queue based on priority determined by the confidence score (Eq. 4).

Algorithm 1 Client-Side Algorithm

Initialize: Draft model $\mathcal{M}_p$, Queue Q_p, Cache C, RECEIVER
Input: Prefix $x_{1:t}$, # Total Tokens T, # Draft tokens γ
Output: Final tokens $x_{t+1:T}$
for $i = 1$ to γ **do**
    $x_{t+i}, p_i \leftarrow \text{DRAFT}(\mathcal{M}_p, x_{1:t+i-1})$
end for
$\text{SEND}(x_{1:t+\gamma}, p_{1:\gamma})$
while $t < T$ **do**
    while Q_p not empty **do**
        $x'_{t+1:t+\delta'+1}, s' \leftarrow Q_p.\text{pop}()$
        if $x'_{t+1:t+\delta'+1}$ not in C **then**
            $C[x'_{t+1:t+\delta'+1}] \leftarrow \text{PREDRAFT}(x_{1:t}, x'_{t+1:t+\delta'+1})$
        end if
    end while
    $y_{1:t'} \leftarrow \text{Concat}(x_{1:t}, x_{t+1:t+\delta+1})$
    if $x_{t+1:t+\delta+1} \in C$ **then**
        $y_{t':t'+\gamma}, p_{1:\gamma} \leftarrow C[x_{t+1:t+\delta+1}]$
    else
        for $i = 1$ to γ **do**
            $y_{t'+i}, p_i \leftarrow \text{DRAFT}(\mathcal{M}_p, y_{1:t'+i-1})$
        end for
    end if
    $\text{SEND}(y_{t':t'+\gamma}, p_{1:\gamma})$
    $t \leftarrow t'$, $x \leftarrow y$, $C.\text{reset}()$, $Q_p.\text{reset}()$
end while

function PREDRAFT
    Input: Prefix $x_{1:t}$, Tokens $x'_{t+1:t+\delta'+1}$
    $y_{1:t'} \leftarrow \text{Concat}(x_{1:t}, x'_{t+1:t+\delta'+1})$
    for $i = 1$ to γ **do**
        $y_{t'+i}, p'_i \leftarrow \text{DRAFT}(\mathcal{M}_p, x'_{1:t'+i-1})$
    end for
    return $y_{t':t'+\gamma}, p'_{1:\gamma}$
end function

function RECEIVER
    Input: Tokens $x'_{t+1:t+\delta'+1}$, Priority s', *isfinalexit*
    if *isfinalexit* **then**
        $x_{t+1:t+\delta+1} \leftarrow x'_{t+1:t+\delta'+1}$
    else
        $Q_p.\text{push}(x'_{t+1:t+\delta'+1}, s')$
    end if
end function

B Speedup Projection Analysis

One of the bottlenecks in our system is communication between the devices. In addition to directly adding to the latency, it also bottlenecks the number of early exit verifications communicated back to the client. This increases the cache miss rate further increasing the latency. While this is a challenge at present due to limited communication network capabilities, several works have shown the vision of having edge LLMs on 6g networks with a projected network speed up to 10 Tbps Banafaa et al. (2023); Lin et al. (2023); Xu et al. (2024b); Friha et al. (2024); Qu et al. (2024); Zhang et al. (2024). In scenarios where communication latencies

Algorithm 2 Server-Side Algorithm

Initialize: Target Model $\mathcal{M}_q$, Verification criterion VERIFY, Queue Q_e, LISTENER, SENDER
function LISTENER
  Input: Prefix and draft tokens $x_{1:t+\gamma}$, Probs. $p_{1:\gamma}$
  $x^{(1:L)}_{t+1:t+\delta+1}, q^{(1:L)}_{1:\delta+1} \leftarrow \text{VERIFY}(\mathcal{M}_q, x_{1:t+\gamma}, p_{1:\gamma})$
  for all $i = 1, \ldots, L-1$ **do**
    $s^{(i)} \leftarrow \max(q^{(i)}_{1:\delta+1})$
    $Q_e.\text{push}(x^{(i)}_{t+1:t+\delta+1}, s^{(i)})$
  end for
  $\text{SEND}(x^{(L)}_{t+1:t+\delta+1}, \text{isfinalexit} = \text{True})$
  $Q_e.\text{reset}()$
end function
function SENDER
  while Q_e not empty **do**
    $(x'_{t+1:t+\delta+1}, s') \leftarrow Q_e.\text{pop}()$
    $\text{SEND}(x'_{t+1:t+\delta+1}, s', \text{isfinalexit} = \text{False})$
  end while
end function

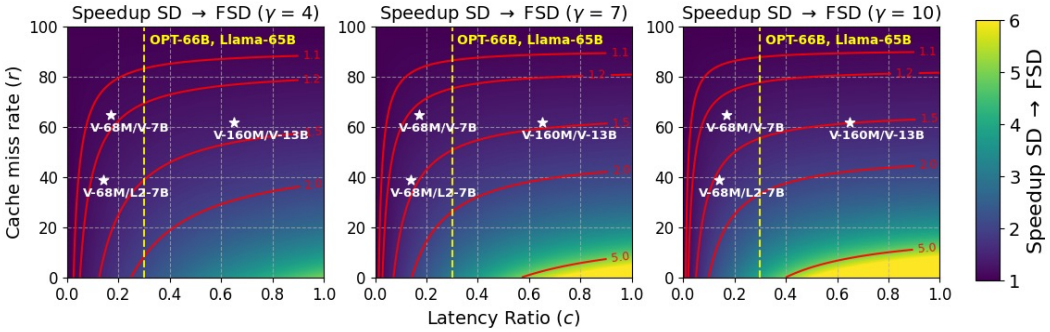

Figure 6: Estimated speedup per round of our FSD relative to vanilla SD method assuming no communication latency. We emphasize the contours for speedups of 1.1x, 1.2x, 1.5x, 2x, and 5x, and we indicate the position of our models within this landscape. Additionally, we highlight the operating range for the larger models OPT-66B and Llama-65B.

T_c is negligible relative to drafting and verification time, and ignoring thread synchronization latency (T_r) for simplicity, we can approximate the speedup SD $\rightarrow$ FSD as:

$$\text{Speedup (SD} \rightarrow \text{FSD)} = \frac{\gamma c + 1}{r(\gamma c) + 1} \tag{9}$$

This formula reduces the final speedup to be affected by two factors—Cache miss rate r and Latency Ratio c. Cache miss rate r depends on the redundancy in the target model and how well the early exit adapters are trained. On the other hand, c is highly dependent on the compute capability of the edge device. Since edge devices are often slower, this pushes the c to be higher.

We visualize Eq. 9 as a heatmap in Fig. 6 for γ values 4, 7 and 10. For reference, we plot the measured c and r values based on the Jetson implementation of our current set of models within this landscape. Naturally, having a lower r will improve speedup, but the usefulness of our FSD method becomes more pronounced as we get to higher c and γ. For model sets with a latency ratio greater than 0.5 and well-trained early exit adapters that achieve a cache miss rate of less than 10%, we can anticipate a speedup over 5x.

Extending our analysis to larger models, specifically OPT-66B and Llama-65B with draft models OPT-125M and NoFT-Wide-796M, we use reported latencies from Yan et al. (2024) (6.6 ms for draft, 67 ms for target) and factor in a 3x slowdown on Jetson, arriving at $c \approx 0.3$. This value is illustrated by the yellow line in Fig. 6. For instance, to achieve a 2x speedup with γ values of 4, 7, and 10, the cache miss rate must remain below 10%, 25%, and 35%, respectively.

C Batch Processing

Table 9 shows latency analysis for Vicuna-7B (A100) and Vicuna-68M (Jetson Nano). Batch processing improves throughput but not always latency; e.g., batch size 32 increases A100 latency by over 5x. However, API providers often offer discounts for batch processing (e.g., OpenAI provides 50% discount OpenAI Pricing), making it a cost-saving approach. On the client, batch processing shows a smaller latency increase—batch sizes of 1 and 8 differ by 15%. A batched pre-drafting approach could reduce latency but requires waiting to accumulate multiple early exits, introducing a trade-off.

Table 9: Server and client latency for different batch sizes.

Batch Size	**Server Latency (Vicuna-7B) (A100)**	**Client Latency (Vicuna-68M) (Jetson)**
1	17.94	7.76
2	21.75	8.02
3	24.35	7.57
4	24.63	7.87
8	30.73	8.97
12	44.52	9.71
16	45.79	10.63
32	96.94	14.49
64	258.79	OOM