Beyond Markovian RL: Efficient Offline RL in Regular Decision Processes

Roberto Cipollone
Sapienza University of Rome
cipollone@diag.uniroma1.it

Anders Jonsson
Universitat Pompeu Fabra
anders.jonsson@upf.edu

Alessandro Ronca*
University of Oxford
alessandro.ronca@cs.ox.ac.uk

Mohammad Sadegh Talebi
University of Copenhagen
m.shahi@di.ku.dk

Abstract

This paper deals with offline (or batch) Reinforcement Learning (RL) in episodic Regular Decision Processes (RDPs). RDPs are the subclass of Non-Markov Decision Processes where the dependency on the history of past events can be captured by a finite-state automaton. We consider a setting where the automaton that underlies the RDP is unknown, and a learner strives to learn a near-optimal policy using pre-collected data, in the form of non-Markov sequences of observations, without further exploration. We present RegORL, an algorithm that suitably combines automata learning techniques and state-of-the-art algorithms for offline RL in MDPs. RegORL has a modular design allowing one to use any off-the-shelf offline RL algorithm in MDPs. We report a non-asymptotic high-probability sample complexity bound for RegORL to yield an ε-optimal policy, which makes appear a notion of concentrability relevant for RDPs. Furthermore, we present a sample complexity lower bound for offline RL in RDPs. To our best knowledge, this is the first work presenting a provably efficient algorithm for offline learning in RDPs.

1 Introduction

Most reinforcement learning (RL) algorithms hinge on the Markovian assumption, i.e. that the underlying system transitions and rewards are Markovian in some natural notion of (observable) state, and hence, the distribution of future observations depends only on the current state-action of the system. This fundamental assumption allows one to model decision making using the powerful framework of Markov Decision Processes (MDPs) [1]. However, there are many application scenarios where rewards are issued according to temporal conditions over histories (or trajectories), and others where the environment itself evolves in a history-dependent manner. As a result, Markovian approaches may prove unsuitable for modeling such situations. These scenarios can be appropriately modeled as *Non-Markovian Decision Processes (NMDPs)* [2, 3].

NMDPs describe environments where the distribution on the next observation and reward is a function of the history. In these environments, behaving optimally may also require to take histories into account. For example, a robot may receive a reward for delivering an item only if the item was previously requested, and a self-driving car is more likely to skid and lose control if it previously rained. Also, consider a mobile robot that has to track an object which may disappear from its field of view. The object is likely to be found again in the same place where it was seen last time. This

*Most of the work was carried out while the author was affiliated with Sapienza University of Rome.

16th European Workshop on Reinforcement Learning (EWRL 2023).

requires the agent to remember, hence to act according to information in its interaction history. In general, an NMDP can show an arbitrary dependency on the history or trace, preventing efficient learning. Consequently, recent research has focused on tractable sub-classes of NMDPs. In Regular Decision Processes (RDPs) [3], the next observation and reward distributions depend on regular properties of the history, which can be captured by a deterministic finite-state automaton. This determines the existence of a finite state space where states are determined by histories, and where the Markov property is regained.

In this paper, we investigate offline RL in episodic Regular Decision Processes, where the agent is provided with some pre-collected dataset sampled using a fixed behavior policy, and the goal is to find a near-optimal policy in the RDP using a dataset with as few samples as possible (and without further exploration). Offline RL in MDPs has received extensive attention in the past few years, and provably sample efficient algorithms have been proposed for various settings. Despite extensive and rich literature on MDPs, comparatively little work exists on offline RL in NMDPs. The scarcity of results may likely be attributed to the difficult nature of the problem rather than the lack of interest.

Partially-Observable Markov Decision Processes (POMDPs) [4] are also NMDPs, and RDPs can be seen as the subclass of POMDPs that enjoy the property of having hidden states determined by the history of observations. This is a key property that allows one to take advantage of a set of planning and learning techniques that do not apply to arbitrary POMDPs. Planning in POMDPs is computationally intractable [5], and two common approaches to solve (and learn) them rely on maintaining either a belief state or a finite history of observations. Maintaining and updating a belief state is worst-case exponential in the size of the original observation space, while the latter approach yields a space whose size is exponential in the history length. State-of-the-art work on offline RL in POMDPs considers restricted classes of POMDPs such as undercomplete POMDPs (e.g., [6, 7]), which cannot be used to model all RDP instances. General POMDPs are only considered under assumptions such as the possibility of reaching every belief state in a few steps [8] or ergodicity [9]. While existing offline RL algorithms for solving POMDPs cannot guarantee provable learning in a generic RDP, the structural properties of RDPs indicate that they can be solved more efficiently using techniques that are carefully tailored to their structure. Therefore, provably sample-efficient learning of near-optimal policies entails exploiting the intrinsic structure of RDPs in an efficient manner.

1.1 Summary of Contributions

We formalize offline RL in RDPs (Section 2), and establish a first, to the best of our knowledge, sample complexity lower bound thereof (Section 5). We introduce an algorithm, called `RegORL`, that learns ε-optimal policies for any RDP, in the episodic setting. At the core of `RegORL`, there is a component called AdaCT–H, which is a variant of AdaCT [10], carefully tailored to the episodic setting here. AdaCT–H learns a minimal automaton that underlies the unknown RDP without prior knowledge. The output automaton is further used to derive a Markov abstraction of data to be used by any off-the-shelf algorithm for offline RL in episodic MDPs. We present a sample-complexity bound for AdaCT–H to return a minimal underlying automaton with high probability. This bound substantially improves the existing bound for the original AdaCT, and can be of independent interest. In view of the modular design of `RegORL`, the total sample complexity is controlled by twice that of AdaCT–H (Theorem 6) and that for the incorporated off-the-shelf algorithm. Furthermore, we provide a first lower-bound for offline RL in RDPs that involves relevant parameters for the problem, such as the RDP single-policy concentrability, which extends an analogous notion for MDPs from the literature. Finally, if contrasted to both online learning in RDPs and automata learning, our results suggest possible improvements in sample complexity results for both areas.

1.2 Related Work

There is a rich and growing literature on offline RL in MDPs and learning algorithm with provably efficient sample efficiency have been proposed for various settings for both tabular MDPs and using function approximation; see, e.g., [11, 12, 13, 14, 15, 16, 17, 18, 19, 20]. For example, in episodic MDPs, it is established that the optimal sample size in offline RL depends on the size of state-space, episode length, as well as some notion of concentrability reflecting the distribution mismatch between the behavior and optimal policy. A closely related problem is off-policy learning; see, e.g., [21, 22, 23] and the recent survey [24].

NMDPs. Non-Markov Decision Processes have been studied under many different names. RL in RDPs or equivalent settings is considered in [25, 26, 27, 28]. The only existing sample complexity bounds for RL in RDPs are given in [27] for the online discounted setting, which are derived under the (restrictive) assumption that the behaviour policy is uniform. Further, they are arguably loose in view of their dependency on problem parameters. The simpler settings where only rewards are non-Markovian is considered in [29, 30, 31, 32, 33, 34]. RDPs are related to feature MDPs [35, 36] as they map histories to states. Solution techniques for feature MDPs [35, 37] are based on suffix trees, which can be of exponential size in the horizon when an automaton of linear size exists. The convergence properties of Q-learning over a (known) underlying state space such as the one of an RDP are studied in [38]. State representations are a more abstract approach [39, 40, 41, 42]. Our automata are one kind of state representation. Here the existing bounds show a linear dependency on the number of candidate representations, which is exponential in the number of states in our case. A similar dependency is also observed in [43]. Non-Markovianity is also introduced by logical specifications that the agent is required to satisfy [44, 45, 46, 47, 48]; however, it is resolved a priori from the known specification.

Regular Decision Processes (RDPs). RDPs have been introduced in Brafman and De Giacomo [3] originally as a formalism based on temporal logic. In particular, the temporal logics of the future on finite traces LTL_f and LDL_f. Formulas of these logics can be translated to automata. This is a key fact leveraged by algorithmic solutions for RDPs. The first RL algorithm for RDPs appears in [25] for the online discounted setting. It is automaton-based, and in particular, it learns the RDP in the form of a Mealy machine. The algorithm does not have performance guarantees, and it is shown in [27] to incur an exponential dependency on the length of the relevant histories.

The first complexity bounds for RL in RDPs are given in [27] in the online discounted setting. Also here RDPs are seen as an automaton-based formalism. This work shows the correspondence between RDPs and Probabilistic Deterministic Finite Automata (PDFA), and it introduces the idea of using PDFA-learning techniques to learn RDPs. Their sample complexity bounds are not immediately comparable to ours, due to the different setting. However, our bounds show an improved dependency on several key quantities. Furthermore, we provide a sample complexity lower bound, whereas their results are limited to showing that a dependency on the quantities occurring in their upper bounds is necessary. Finally, our analysis allows for an arbitrary behavior policy, whereas they assume uniform exploration. Ronca et al. [28] introduce the idea of seeing the transition function of a PDFA as a Markov abstraction of the histories to be passed to an RL algorithm for MDPs, so as to employ it in a modular manner. A setting equivalent to RDPs is considered in [26], although using the terminology of reward machines—discussed in Appendix A. The work proposes an RL algorithm based on automata learning, with no performance guarantees.

POMDPs and PSRs. Every RDP can be seen as a POMDP whose hidden dynamics evolves according to its finite-state automaton. However, RL in POMDPs is a largely open problem. Even for a known POMDP, computing a near-optimal policy is PSPACE-complete [5]. For unknown dynamics, which is the setting considered here, favourable bounds have been obtained for the class of undercomplete POMDPs [6, 7], which does not include all RDPs, or alternatively, under other assumptions such as few-step reachability [8] or ergodicity [9]. This relationship between RDPs and POMDPs can be also seen from the notion of state. In fact, the automaton state of an RDP is an instance of information state, as defined in [49], and of belief, as in classic POMDP literature [50].

Predictive State Representations (PSRs) [51, 52, 53, 54] are general descriptions of dynamical systems that capture POMDPs and hence RDPs. There exist polynomial PAC bounds for online RL in PSRs [55]. Nonetheless, these bounds are looser than the one we show here, since they must necessarily consider a wider class of models. Moreover, although a minimum core set for PSRs is similar to a minimal RDP, the bounds feature a number of quantities that are specific to PSRs (e.g., regularity parameter) and do not immediately apply to RDPs.

We provide additional literature review in Appendix A.

2 Preliminaries and Problem Formulation

Notations. Given a set $\mathcal{Y}$, $\Delta(\mathcal{Y})$ denotes the set of probability distributions over $\mathcal{Y}$. For a function $f : \mathcal{X} \to \Delta(\mathcal{Y})$, $f(x, y)$ is the probability of y given x. For $y \in \mathcal{Y}$, we use $\mathbb{1}_y \in \Delta(\mathcal{Y})$ to denote

the Kronecker delta defined as $\mathbb{1}_y(y) = 1$ and $\mathbb{1}_y(y') = 0$ for each $y' \in \mathcal{Y}$ such that $y' \neq y$. Given an event E, $\mathbb{I}(E)$ denotes the indicator function of E, which equals 1 if E is true, and 0 otherwise, e.g. $\mathbb{1}_y(y') = \mathbb{I}(y = y')$. For any integer $Z \geq 0$, $[Z]$ is an abbreviation of the set $\{0, \dots, Z\}$.

2.1 Episodic Regular Decision Processes

We first introduce generic episodic decision processes. An episodic decision process is a tuple $\mathcal{P} = \langle \mathcal{O}, \mathcal{A}, \mathcal{R}, \bar{T}, \bar{R}, H \rangle$, where $\mathcal{O}$ is a finite set of observations, $\mathcal{A}$ is a finite set of actions, $\mathcal{R} \subset [0, 1]$ is a finite set of rewards, which we assume are bounded in $[0, 1]$, and $H \geq 1$ is a finite horizon. As is common in automata theory, we use sequences $a_m r_m o_m \cdots a_n r_n o_n$ to denote traces of actions, rewards and observations, and concatenation $\mathcal{ARO} = \{aro : a \in \mathcal{A}, r \in \mathcal{R}, o \in \mathcal{O}\}$ to denote sets of sequences. Let $\mathcal{E}_t = (\mathcal{ARO})^{t+1}$ be the set of traces of length $t + 1$, and let $e_{m:n} \in \mathcal{E}_{n-m}$ denote a trace from time m to time n. A *trajectory* $e_{0:T}$ is the full trace generated until time T. We assume that a trajectory $e_{0:T}$ can be partitioned into *episodes* $e_{\ell:\ell+H} \in \mathcal{E}_H$ of length $H + 1$, and that the dynamics at time $T = k(H + 1) + t$, $t \in [H]$, are *conditionally independent* of the previous episodes and all rewards, i.e. the dynamics only depend on $a_{k(H+1)} o_{k(H+1)} \cdots a_T o_T$. For $t \in [H]$, let $\mathcal{H}_t = (\mathcal{AO})^{t+1}$ denote the relevant part of the trajectory for decision making, and let $\mathcal{H} = \cup_{t=0}^{H} \mathcal{H}_t$. We refer to elements in $\mathcal{H}$ as *histories* even though they are not complete trajectories. In each episode $e_{0:H}$, $a_0 = a_\perp$ is a dummy action used to initialize the distribution on $\mathcal{H}_0$. The transition function $\bar{T} : \mathcal{H} \times \mathcal{A} \to \Delta(\mathcal{O})$ and reward function $\bar{R} : \mathcal{H} \times \mathcal{A} \to \Delta(\mathcal{R})$ only depend on the history of the current episode. Given $\mathcal{P}$, a generic policy is a function $\pi : (\mathcal{AO})^* \to \Delta(\mathcal{A})$ that maps trajectories to distributions over actions. The value function $V^\pi : [H] \times \mathcal{H} \to \mathbb{R}$ of a policy π is a mapping that assigns real values to histories. For $h \in \mathcal{H}$, it is defined as $V^\pi(H, h) := 0$ and

$$V^\pi(t, h) := \mathbb{E}\left[\sum_{i=t+1}^{H} r_i \,\middle|\, h, \pi \right], \quad \forall t < H, \forall h \in \mathcal{H}_t. \tag{1}$$

For brevity, we write $V_t^\pi(h) := V^\pi(t, h)$. Solving $\mathcal{P}$ amounts to computing an optimal policy π^* whose value function $V^{\pi^*} = V^*$ is optimal. The optimal value function V^* is defined as $V_t^*(h) := \sup_\pi V_t^\pi(h)$ for all $t \in [H]$ and $h \in \mathcal{H}_t$, where sup is taken over all policies $\pi : (\mathcal{AO})^* \to \Delta(\mathcal{A})$. In what follows we consider simpler policies of the form $\pi : \mathcal{H} \to \Delta(\mathcal{A})$ mapping histories to distributions over actions. Let $\Pi_\mathcal{H}$ denote the set of such policies. It can be shown that $\Pi_\mathcal{H}$ always contains an optimal policy, i.e. $V_t^*(h) := \max_{\pi \in \Pi_\mathcal{H}} V_t^\pi(h), \forall t \in [H], \forall h \in \mathcal{H}_t$. An episodic MDP is an episodic decision process whose dynamics only depend on the last observation and action [1].

Episodic RDPs. An episodic Regular Decision Process (RDP) [3, 25] is an episodic decision process $\mathbf{R} = \langle \mathcal{O}, \mathcal{A}, \mathcal{R}, \bar{T}, \bar{R}, H \rangle$ described by a *finite transducer* (Moore machine) $\langle \mathcal{Q}, \Sigma, \Omega, \tau, \theta, q_0 \rangle$, where $\mathcal{Q}$ is a finite set of states, $\Sigma = \mathcal{A}\,\mathcal{O}$ is a finite input alphabet composed of actions and observations, Ω is a finite output alphabet, $\tau : \mathcal{Q} \times \Sigma \to \mathcal{Q}$ is a transition function, $\theta : \mathcal{Q} \to \Omega$ is an output function, and $q_0 \in \mathcal{Q}$ is an initial state [56, 57, 58]. The output space $\Omega = \Omega_\mathsf{o} \times \Omega_\mathsf{r}$ consists of a finite set of functions that compute the conditional probabilities of observations and rewards, where $\Omega_\mathsf{o} \subset \mathcal{A} \to \Delta(\mathcal{O})$ and $\Omega_\mathsf{r} \subset \mathcal{A} \to \Delta(\mathcal{R})$. For simplicity, we use $\theta_\mathsf{o} : \mathcal{Q} \times \mathcal{A} \to \Delta(\mathcal{O})$ and $\theta_\mathsf{r} : \mathcal{Q} \times \mathcal{A} \to \Delta(\mathcal{R})$ to denote the individual conditional probabilities. Let τ^{-1} denote the inverse of τ, i.e. $\tau^{-1}(q) \subseteq \mathcal{Q} \times \mathcal{A}\,\mathcal{O}$ is the subset of state-symbol pairs that map to $q \in \mathcal{Q}$. We use A, R, O, Q to denote the cardinality of $\mathcal{A}, \mathcal{R}, \mathcal{O}, \mathcal{Q}$, respectively, and assume $A \geq 2$.

An RDP $\mathbf{R}$ implicitly represents a function $\bar{\tau} : \mathcal{H} \to \mathcal{Q}$ from histories in $\mathcal{H}$ to states in $\mathcal{Q}$, recursively defined as $\bar{\tau}(h_0) := \tau(q_0, a_0 o_0)$ and $\bar{\tau}(h_t) := \tau(\bar{\tau}(h_{t-1}), a_t o_t)$. The dynamics of $\mathbf{R}$ are defined as $\bar{T}(h, a, o) = \theta_\mathsf{o}(\bar{\tau}(h), a, o)$ and $\bar{R}(h, a, r) = \theta_\mathsf{r}(\bar{\tau}(h), a, r), \forall h \in \mathcal{H}, \forall aro \in \mathcal{ARO}$. Episodic RDPs are acyclic, i.e. the states can be partitioned as $\mathcal{Q} = \mathcal{Q}_0 \cup \cdots \cup \mathcal{Q}_{H+1}$, with $\mathcal{Q}_{t+1}$ the set of states generated by histories in $\mathcal{H}_t$ for each $t \in [H]$. An RDP is minimal if its Moore machine is minimal. Since there is nothing to predict at time $H + 1$, a minimal RDP contains a single state q_{H+1} in $\mathcal{Q}_{H+1}$. To ensure that an acyclic RDP $\mathbf{R}$ is minimal, we introduce a designated termination observation $o_\perp$ in $\mathcal{O}$ and define $\tau(q_{H+1}, a o_\perp) = q_{H+1}$ and $\theta_\mathsf{o}(q_{H+1}, a) = \mathbb{1}_{o_\perp}$ for each $a \in \mathcal{A}$. Hence, q_{H+1} is absorbing and the states in $\mathcal{Q}$ implicitly count how many steps are left until we observe $o_\perp$. Without $o_\perp$, a Moore machine could potentially represent all episodes using fewer than $H + 2$ states.

Since the conditional probabilities of observations and rewards are fully determined by the current state-action pair (q, a), an RDP $\mathbf{R}$ adheres to the Markov property over its states, but *not over the*

(a) Cookie domain. (b) Agent's view.

Figure 1: The *cookie* domain: The agent can only see what is in the current room [26].

observations. Given a state $q_t \in \mathcal{Q}$ and an action $a_t \in \mathcal{A}$, the probability of the next transition is

$$\mathbb{P}(r_t, o_t, q_{t+1} \mid q_t, a_t, \mathbf{R}) = \theta_{\mathsf{r}}(q_t, a_t, r_t)\, \theta_{\mathsf{o}}(q_t, a_t, o_t)\, \mathbb{I}(q_{t+1} = \tau(q_t, a_t o_t)).$$

Evidently, in the special case where an RDP is Markovian in both observations and rewards, it reduces to an episodic MDP. More precisely, any episodic MDP with actions $\mathcal{A}$, states $\mathcal{O}$ and horizon H can be represented by some episodic RDP with states $\mathcal{Q} \subseteq \mathcal{O} \times [H+1]$ and inputs $\mathcal{A}\mathcal{O}$.

An important class of policies for RDPs are the regular policies. Given an RDP $\mathbf{R}$, a policy $\pi : \mathcal{H} \to \Delta(\mathcal{A})$ is called *regular* if $\pi(h_1) = \pi(h_2)$ whenever $\bar{\tau}(h_1) = \bar{\tau}(h_2)$, for all $h_1, h_2 \in \mathcal{H}$. Let $\Pi_{\mathbf{R}}$ denote the set of regular policies for $\mathbf{R}$. Regular policies exhibit powerful properties: First, under a regular policy, suffixes have the same probability of being generated for histories that map to the same RDP state. Second, there exists at least one optimal policy that is regular.

Proposition 1. *Consider an RDP $\mathbf{R}$, a regular policy $\pi \in \Pi_{\mathbf{R}}$ and two histories h_1 and h_2 in $\mathcal{H}_t$, $t \in [H]$, such that $\bar{\tau}(h_1) = \bar{\tau}(h_2)$. For each suffix $e_{t+1:H} \in \mathcal{E}_{H-t-1}$, the probability of generating $e_{t+1:H}$ is the same for h_1 and h_2, i.e. $\mathbb{P}(e_{t+1:H} \mid h_1, \pi, \mathbf{R}) = \mathbb{P}(e_{t+1:H} \mid h_2, \pi, \mathbf{R})$.*

Proposition 2. *Each RDP $\mathbf{R}$ has at least one optimal policy $\pi^* \in \Pi_{\mathbf{R}}$.*

Due to Proposition 2, when solving an RDP $\mathbf{R}$, we can restrict to the set of regular policies $\Pi_{\mathbf{R}}$. A regular policy can be compactly defined as $\pi : \mathcal{Q} \to \Delta(\mathcal{A})$, where $\pi(q_0) = \mathbb{1}_{a_\perp}$ always selects the dummy action $a_\perp$, and its value function as $V^\pi : [H] \times \mathcal{Q} \to \mathbb{R}$.

Next, we define occupancy measures for RDPs. Given a regular policy $\pi : \mathcal{Q} \to \Delta(\mathcal{A})$ and $t \in [H]$, let $d_t^\pi \in \Delta(\mathcal{Q}_t \times \mathcal{A}\,\mathcal{O})$ be the induced probability distribution over states in $\mathcal{Q}_t$ and input symbols in $\mathcal{A}\,\mathcal{O}$, recursively defined as $d_0^\pi(q_0, a_0 o_0) = \theta_{\mathsf{o}}(q_0, a_0, o_0)$ and

$$d_t^\pi(q_t, a_t o_t) = \sum_{(q, ao) \in \tau^{-1}(q_t)} d_{t-1}^\pi(q, ao) \cdot \pi(q_t, a_t) \cdot \theta_{\mathsf{o}}(q_t, a_t, o_t), \quad t > 0.$$

We also overload the notation by writing $d_t^\pi(q_t, a_t) = \sum_{o_t \in \mathcal{O}} d^\pi(q_t, a_t o_t)$. Of particular interest are the occupancy distributions $d_t^* := d_t^{\pi^*}$, associated with an optimal policy π^*.

Example 1 (The cookie domain [26])**.** The *cookie domain* (Figure 1a) has three rooms connected by a hallway. The agent (purple triangle) can move in the four cardinal directions. When pressing a button in the orange room, a cookie randomly appears in the green or blue room. The agent receives a reward of $+1$ for eating the cookie and may then press the button again. This domain is partially observable since the agent can only see what is in the room that it currently occupies (Figure 1b). The cookie domain can be modelled as an episodic RDP with states $\mathcal{Q} = [H+1] \times \mathcal{O} \times \mathcal{U}$, where $\mathcal{U} = \{u_1, u_2, u_3, u_4\}$. The value of $\mathcal{U}$ is u_1 when the button has *not* been pressed yet (or not pressed since the last cookie was eaten). The value is u_2 when the button has been pressed, but the agent has not visited the blue or green room yet. In this case, the agent knows that visiting either room, it has a 0.5 probability of finding a cookie. If the agent visits the green room and finds no cookie, the value becomes u_3, meaning that the cookie is in the blue room. The meaning of u_4 is dual to that of u_3.

2.2 Offline RL in RDPs

We are now ready to formally present the offline RL problem in episodic RDPs. Assume that we have access to a batch dataset $\mathcal{D}$ collected through interacting with an unknown (but fixed) episodic RDP $\mathbf{R}$ using a regular *behavior* policy π^{b}. We assume that $\mathcal{D}$ comprises N episodes, where the k-th episode is of the form $e_{0:H}^k = a_0^k r_0^k o_0^k \cdots a_H^k r_H^k o_H^k$, where $q_0^k = q_0$ and where, for each $t \in [H]$,

$$a_t^k \sim \pi^{\mathsf{b}}(q_t^k), \quad r_t^k \sim \theta_{\mathsf{r}}(q_t^k, a_t^k), \quad o_t^k \sim \theta_{\mathsf{o}}(q_t^k, a_t^k), \quad q_{t+1}^k = \tau(q_t^k, a_t^k o_t^k).$$

The goal is to compute a near-optimal policy $\widehat{\pi}$ using the dataset $\mathcal{D}$ (and without further exploration). More precisely, for a pre-specified accuracy $\varepsilon \in (0, H]$, we aim to find an ε-optimal policy $\widehat{\pi}$ satisfying $V_0^*(h) - V_0^{\widehat{\pi}}(h) \leq \varepsilon$ for each $h \in \mathcal{H}_0$, using the smallest dataset $\mathcal{D}$ possible. By virtue of Proposition 2, one may expect that it is sufficient to search for regular ε-optimal policies. The following assumption ensures that the dataset $\mathcal{D}$, collected under a behavior policy π^{b} with occupancy distribution $d_t^{\mathsf{b}} := d_t^{\pi^{\mathsf{b}}}$, suffices to find a ε-optimal policy in a provably sample efficient way.

Assumption 1. The minimal occupancy distribution under π^{b} is bounded away from zero. More precisely, $\min_{t \in [H], q \in \mathcal{Q}_t, a \in \mathcal{A}} d_t^{\mathsf{b}}(q, a) > 0$.

The second assumption concerns the richness of π^{b} and its capability to allow us to distinguish between the various states using data. This is perfectly captured by notions of *distiguishability* arising in automata theory (e.g., [10]). We apply these concepts in our context, where such discrete distributions are generated from an RDP and a policy. Consider a minimal RDP $\mathbf{R}$ with states $\mathcal{Q} = \cup_{t \in [H+1]} \mathcal{Q}_t$, a policy π, and any metric L over $\Delta((\mathcal{A}\mathcal{R}\mathcal{O})^*)$. We define the L-*distinguishability* of $\mathbf{R}$ and π as the maximum μ_0 such that, for any $t \in [H]$ and two distinct $q, q' \in \mathcal{Q}_t$, the probability distributions over suffix traces $e_{t:H}$ from the two states satisfy $L(\mathbb{P}(e_{t:H} \mid q_t = q, \pi), \mathbb{P}(e_{t:H} \mid q_t = q', \pi)) \geq \mu_0$. In particular, we consider the L_∞^{p}-distinguishability as the parameter defined according to the metric $L_\infty^{\mathsf{p}}(p_1, p_2) = \max_{u \in [t], e_{0:u} \in \mathcal{E}_u} |p_1(e_{0:u} *) - p_2(e_{0:u} *)|$, where $p(e_{0:u} *)$ represents the probability of the trace prefix $e_{0:u} \in \mathcal{E}_u$, followed by any trace $e_{u+1:t}$. The L_1^{p}-distinguishability is defined analogously, from $L_1^{\mathsf{p}}(p_1, p_2) = \sum_{u \in [t], e_{0:u} \in \mathcal{E}_u} |p_1(e_{0:u} *) - p_2(e_{0:u} *)|$.

Assumption 2. The behavior policy π^{b} has L_∞^{p}-distinguishability of at least $\mu_0 > 0$.

Finally, in order to capture the mismatch in occupancy measure between the optimal policy and the behavior policy, we introduce a key quantity called *single-policy RDP concentrability coefficient*, which extends the single-policy concentrability coefficient in MDPs to RDPs:

Definition 1. The *single-policy RDP concentrability coefficient* of an RDP $\mathbf{R}$ with episode horizon H and with respect to a policy π^{b} is defined as:

$$C_{\mathbf{R}}^* = \max_{t \in [H], q \in \mathcal{Q}_t, ao \in \mathcal{A}\mathcal{O}} \frac{d_t^*(q, ao)}{d_t^{\mathsf{b}}(q, ao)} \,. \tag{2}$$

The concentrability coefficient in Definition 1 resembles the notions of concentrability in MDPs (e.g., [14, 15]). It should be stressed, however, that those in MDPs are defined in terms of observation-action pairs (o, a), whereas $C_{\mathbf{R}}^*$ is defined in terms of *hidden* RDP states and actions-observations, i.e. (q, ao). It is worth remarking that $C_{\mathbf{R}}^*$ could be equivalently defined in terms of state-action pairs (q, a). Finally, in the special case where the RDP is Markovian – in which case it coincides with an episodic MDP – we have $\mathcal{Q} \subseteq \mathcal{O} \times [H+1]$ and $C_{\mathbf{R}}^*$ coincides with the standard single-policy concentrability coefficient for MDPs in [15]. This fact is shown in the proof of Corollary 16.

3 `RegORL`: Learning an Episodic RDP

In this section we present an algorithm for learning the transition function of an RDP $\mathbf{R}$ from a dataset $\mathcal{D}$ of episodes generated by a regular behavior policy π^{b}. To simplify the presentation, we treat $\mathcal{D}$ as a multiset of traces in $\mathcal{E}_H$. The learning agent only has access to the non-Markovian traces in $\mathcal{D}$, and needs prior knowledge of $\mathcal{A}$, $\mathcal{R}$ and $\mathcal{O}$, but no prior knowledge of π^{b} and $\mathbf{R}$. Our algorithm is an adaptation of AdaCT [10] to episodic RDPs, and we thus refer to the algorithm as AdaCT–H.

The intuition behind AdaCT–H is that due to Proposition 1, two histories h_1 and h_2 should map to the same RDP state if they induce the same probability distribution on suffixes. AdaCT–H starts by adding an initial RDP state q_0 to $\mathcal{Q}_0$, whose suffixes are the full traces in $\mathcal{D}$ (line 1). The algorithm then iteratively constructs the state sets $\mathcal{Q}_1, \ldots, \mathcal{Q}_{H+1}$. In each iteration $t \in [H]$, AdaCT–H creates a set of candidate states $\mathcal{Q}_{\mathsf{c},t+1}$ by extending all states in $\mathcal{Q}_t$ with symbols in $\mathcal{A}\,\mathcal{O}$ (line 3). We use qao to simultaneously refer to a candidate state and its state-symbol prefix (q, ao). We associate each candidate state qao with a multiset of suffixes $\mathcal{X}(qao)$, i.e. traces in $\mathcal{E}_{H-t-1}$, obtained by selecting all suffixes in $\mathcal{X}(q)$ that start with action a and observation o (line 4).

Next, AdaCT–H finds the candidate state whose suffix multiset has maximum cardinality, and promotes this candidate to $\mathcal{Q}_{t+1}$ by defining the transition function τ accordingly (lines 5-7). The

Function ADACT–H($\mathcal{D}$, δ)

Input: Dataset $\mathcal{D}$ containing N traces in $\mathcal{E}_H$, failure probability $0 < \delta < 1$
Output: Set $\mathcal{Q}$ of RDP states, transition function $\tau : \mathcal{Q} \times \mathcal{A}\,\mathcal{O} \to \mathcal{Q}$

1 $\mathcal{Q}_0 \leftarrow \{q_0\}$, $\mathcal{X}(q_0) \leftarrow \mathcal{D}$ `// initial state`
2 **for** $t = 0, \dots, H$ **do**
3 $\quad \mathcal{Q}_{\mathsf{c},t+1} \leftarrow \{qao \mid q \in \mathcal{Q}_t, ao \in \mathcal{A}\,\mathcal{O}\}$ `// get candidate states`
4 $\quad$ **foreach** $qao \in \mathcal{Q}_{\mathsf{c},t+1}$ **do** $\mathcal{X}(qao) \leftarrow \{e_{t+1:H} \mid aroe_{t+1:H} \in \mathcal{X}(q)\}$ `// compute suffixes`
5 $\quad q_{\mathsf{m}}a_{\mathsf{m}}o_{\mathsf{m}} \leftarrow \arg\max_{qao \in \mathcal{Q}_{\mathsf{c},t+1}} |\mathcal{X}(qao)|$ `// most common candidate`
6 $\quad \mathcal{Q}_{t+1} \leftarrow \{q_{\mathsf{m}}a_{\mathsf{m}}o_{\mathsf{m}}\}$, $\tau(q_{\mathsf{m}}, a_{\mathsf{m}}o_{\mathsf{m}}) = q_{\mathsf{m}}a_{\mathsf{m}}o_{\mathsf{m}}$ `// promote candidate`
7 $\quad \mathcal{Q}_{\mathsf{c},t+1} \leftarrow \mathcal{Q}_{\mathsf{c},t+1} \setminus \{q_{\mathsf{m}}a_{\mathsf{m}}o_{\mathsf{m}}\}$ `// remove from candidate states`
8 $\quad$ **for** $qao \in \mathcal{Q}_{\mathsf{c},t+1}$ **do**
9 $\quad\quad$ *Similar* $\leftarrow \{q' \in \mathcal{Q}_{t+1} \mid \text{not TESTDISTINCT}(t, \mathcal{X}(qao), \mathcal{X}(q'), \delta)\}$ `// confidence test`
10 $\quad\quad$ **if** *Similar* $= \emptyset$ **then** $\mathcal{Q}_{t+1} \leftarrow \mathcal{Q}_{t+1} \cup \{qao\}$, $\tau(q, ao) = qao$ `// promote candidate`
11 $\quad\quad$ **else** $q' \leftarrow$ element in *Similar*, $\tau(q, ao) = q'$, $\mathcal{X}(q') \leftarrow \mathcal{X}(q') \cup \mathcal{X}(qao)$ `// merge states`
12 $\quad$ **end**
13 **end**
14 **return** $\mathcal{Q}_0 \cup \dots \cup \mathcal{Q}_{H+1}$, τ
15 **Function** TESTDISTINCT(t, $\mathcal{X}_1$, $\mathcal{X}_2$, δ)
16 $\quad$ **return** $L^{\mathsf{p}}_{\infty}(\mathcal{X}_1, \mathcal{X}_2) \geq \sqrt{2\log(8(ARO)^{H-t}/\delta)/\min(|\mathcal{X}_1|, |\mathcal{X}_2|)}$

algorithm then iterates over each remaining candidate state $qao \in \mathcal{Q}_{\mathsf{c},t+1}$, comparing the distribution on suffixes in $\mathcal{X}(qao)$ to those of states in $\mathcal{Q}_{t+1}$ (line 9). If the suffix distribution is different from that of each state in $\mathcal{Q}_{t+1}$, qao is promoted to $\mathcal{Q}_{t+1}$ (line 10), else qao is merged with a state $q' \in \mathcal{Q}_{t+1}$ that has a similar suffix distribution (line 11). Finally, ADACT–H returns the set of RDP states $\mathcal{Q}$ and the associated transition function τ. The function TESTDISTINCT compares two multisets $\mathcal{X}_1$ and $\mathcal{X}_2$ of traces in $\mathcal{E}_{H-t-1}$ using the metric L^{p}_{∞}. For $i \in \{1, 2\}$ and each trace $e \in \mathcal{E}_{H-t-1}$, let $\widehat{p}_i(e) = \sum_{x \in \mathcal{X}_i} \mathbb{I}(x = e)/|\mathcal{X}_i|$ be the empirical estimate of p_i, i.e. the proportion of elements in $\mathcal{X}_i$ equal to e. TESTDISTINCT compares $L^{\mathsf{p}}_{\infty}(\mathcal{X}_1, \mathcal{X}_2) \coloneqq L^{\mathsf{p}}_{\infty}(\widehat{p}_1, \widehat{p}_2)$ to a confidence threshold.

Markov transformation. We are now ready to connect the RDP learning phase with the MDP learning phase. RDPs do not respect the Markov property over their observations and rewards, if automaton states remain hidden. However, we can use the reconstructed transition function τ returned by ADACT–H, extended over histories as $\bar{\tau} : \mathcal{H} \to \mathcal{Q}$, to recover the Markov property. In what follows we formalize the notion of Markov transformation and the properties that its outputs satisfy.

Definition 2. Let $e_{0:H} \in \mathcal{E}_H$ be an episode collected from an RDP $\mathbf{R}$ and a policy π^{b} that is regular in $\mathbf{R}$. The *Markov transformation* of e_H with respect to $\mathbf{R}$ is the episode constructed as $a_0 r_0 q_1 \dots a_H r_H q_{H+1}$, where $q_{t+1} = \bar{\tau}(h_t)$ and $h_t = a_0 o_0 \cdots a_t o_t$, $t \in [H]$. The Markov transformation of a dataset $\mathcal{D}$ is the Markov transformation of all the episodes it contains.

A Markov transformation discards all observations from $\mathcal{D}$ and replaces them with RDP states output by $\bar{\tau}$. The dataset so constructed can be seen as generated from an MDP, which we define next.

Definition 3. The episodic MDP *associated to* an episodic RDP $\mathbf{R}$ is $\mathbf{M}_{\mathbf{R}} = \langle \mathcal{Q}, \mathcal{A}, \mathcal{R}, T, \theta_{\mathsf{r}}, H \rangle$, where $T(q, a, q') = \sum_{o \in \mathcal{O}} \mathbb{I}(q' = \tau(q, ao))\, \theta_{\mathsf{o}}(q, a, o)$ for each $(q, a, q') \in \mathcal{Q} \times \mathcal{A} \times \mathcal{Q}$.

The associated MDP in Definition 3 is the decision process that corresponds to the Markov transformation of Definition 2, i.e. any episode produced with the Markov transformation can be equivalently seen as being generated from the associated MDP, in the sense of the following proposition.

Proposition 3. *Let $e_{0:H}$ be an episode sampled from an episodic RDP $\mathbf{R}$ under a regular policy $\pi \in \Pi_{\mathbf{R}}$, with $\pi(h, a) = \pi_{\mathsf{r}}(\bar{\tau}(h), a)$. If e'_H is the Markov transformation of e_H with respect to $\mathbf{R}$, then $\mathbb{P}(e'_H \mid \mathbf{R}, \pi) = \mathbb{P}(e'_H \mid \mathbf{M}_{\mathbf{R}}, \pi_{\mathsf{r}})$, where $\mathbf{M}_{\mathbf{R}}$ is the MDP associated to $\mathbf{R}$.*

Rewards are not affected by the Markov transformation, only observations, implying the following.

Proposition 4. *Let $\pi \in \Pi_{\mathbf{R}}$ be a regular policy in $\mathbf{R}$ s.t. $\pi(h, a) = \pi_{\mathsf{r}}(\bar{\tau}(h), a)$. Then $V^{\pi}_{0,\mathbf{R}} = V^{\pi_{\mathsf{r}}}_{0,\mathbf{M}_{\mathbf{R}}}$, where $V^{\pi}_{0,\mathbf{R}}$ and $V^{\pi_{\mathsf{r}}}_{0,\mathbf{M}_{\mathbf{R}}}$ are the values in the respective decision process, and $V^{*}_{0,\mathbf{R}} = V^{*}_{0,\mathbf{M}_{\mathbf{R}}}$.*

Corollary 5. *Given $\varepsilon \in (0, H]$, if $\pi_{\mathsf{r}} : \mathcal{Q} \to \Delta(\mathcal{A})$ is an ε-optimal policy of $\mathbf{M}_{\mathbf{R}}$, the MDP associated to some RDP $\mathbf{R}$, then, $\pi(h, a) = \pi_{\mathsf{r}}(\bar{\tau}(h), a)$ is ε-optimal in $\mathbf{R}$.*

In summary, from Proposition 3, if $\mathcal{D}_{\mathsf{m}}$ is the Markov transformation of a dataset $\mathcal{D}$ with respect to an RDP $\mathbf{R}$, then, $\mathcal{D}_{\mathsf{m}}$ can be seen as being generated from the associated MDP $\mathbf{M}_{\mathbf{R}}$. Hence, any offline RL algorithm for MDPs can be used for learning in $\mathcal{D}_{\mathsf{m}}$. Moreover, according to Corollary 5, any solution for $\mathbf{M}_{\mathbf{R}}$ can be translated via $\bar{\tau}$ into a policy for the original RDP, with the same guarantees.

Complete algorithm The complete procedure is illustrated in Algorithm 1. Initially, the input dataset $\mathcal{D}$ is separated in two halves. The first portion is used for learning the transition function of the unknown RDP with ADACT–H (Section 3). If an upper bound $\overline{Q}$ on $|\mathcal{Q}|$ is available, it can optionally be provided to compute a more appropriate failure parameter for ADACT–H. If not available, we adopt the upper bound of $2(AO)^H$ states, which is valid for any instance, due to histories having finite length. As we will see in Theorem 6, this would only contribute linearly in H to the required dataset size. The output function computed by ADACT–H is then used to compute a Markov transformation of the second phase, as specified in Definition 2. The resulting dataset, now Markovian, can be passed to a generic offline RL algorithm, which we represent with the function $\text{OFFLINERL}(\mathcal{D}, \varepsilon, \delta)$. In Appendix D, we instantiate it for a specific state-of-the-art offline RL algorithm.

Algorithm 1: Full procedure (`RegORL`)

Input: Dataset $\mathcal{D}$, accuracy $\varepsilon \in (0, H]$, failure probability $0 < \delta < 1$, (optionally) upper bound $\overline{Q}$ on $|\mathcal{Q}|$
Output: Policy $\hat{\pi} : \mathcal{H} \to \Delta(\mathcal{A})$

$\mathcal{D}_1, \mathcal{D}_2 \leftarrow$ separate $\mathcal{D}$ into two datasets of the same size
$\mathcal{Q}, \tau \leftarrow$ ADACT–H$(\mathcal{D}_1, \delta/(4AO\overline{Q}))$, where $\overline{Q} = 2(AO)^H$ if not provided
$\mathcal{D}_2' \leftarrow$ Markov transformation of $\mathcal{D}_2$ with respect to $\bar{\tau}$ as in Definition 2
$\hat{\pi}_{\mathsf{m}} \leftarrow \text{OFFLINERL}(\mathcal{D}_2', \varepsilon, \delta/2)$
return $\hat{\pi} : h \mapsto \hat{\pi}_{\mathsf{m}}(\bar{\tau}(h))$

4 Theoretical Guarantees

We now turn to theoretical performance guarantees of `RegORL`. Our main performance result is a sample complexity bound in Theorem 7, ensuring that an ε-optimal policy for any accuracy $\varepsilon \in (0, H]$ is found by `RegORL`. We also report a sample complexity bound for ADACT–H in Theorem 6, and an alternative bound in Theorem 8. In comparison, the sample complexity bound for ADACT [10] is

$$\mathcal{O}\left(\frac{Q^4 A^2 O^2 H^5 \log(1/\delta)}{\varepsilon^2} \max\left\{\frac{1}{\mu_0^2}, \frac{H^4 O^2 A^2}{\varepsilon^4}\right\}\right).$$

We achieve a tighter bound by using Bernstein's inequalities and exploiting the finiteness of histories.

Theorem 6. *Consider a dataset $\mathcal{D}$ of episodes sampled from an RDP $\mathbf{R}$ and a regular policy $\pi^{\mathsf{b}} \in \Pi_{\mathbf{R}}$. If* ADACT–H *is called with $\mathcal{D}$ and $\delta = \delta_0/2QAO$ in input, with probability $1 - \delta_0$, it returns the transition function of the minimal RDP equivalent to $\mathbf{R}$, provided that*

$$|\mathcal{D}| \geq N_{\delta_0} = \frac{21 \log(8QAO/\delta_0)}{d_{\min}^{\mathsf{b}}\, \mu_0} \sqrt{H \log(2ARO)} = \mathcal{O}\left(\frac{\sqrt{H} \log(Q/\delta_0)}{d_{\min}^{\mathsf{b}}\, \mu_0}\right). \tag{3}$$

where the minimal occupancy distribution is $d_{\min}^{\mathsf{b}} := \min_{t \in [H], q \in \mathcal{Q}_t, ao \in \mathcal{A}\mathcal{O}} d_t^{\mathsf{b}}(q, ao)$.

The proof appears in Appendix C.2. Theorem 6 tells us that the sample complexity of ADACT–H, to return a minimal RDP, is inversely proportional to μ_0, the L_∞^{p}-distinguishability of $\mathbf{R}$ and π^{b}, and the minimal occupancy $d_{\min}^{\mathsf{b}}$. Note that $d_{\min}^{\mathsf{b}} \leq 1/(QOA)$. The bound also depends on Q, the number of RDP states, implicitly through $d_{\min}^{\mathsf{b}}$ and explicitly via a logarithmic term. In the absence of prior knowledge of Q, one may use the worst-case upper bound $\overline{Q} = 2(AO)^H$. The sample complexity would then have an additional linear term in H, since $\overline{Q}$ is only used in the logarithmic term to set the appropriate value of δ. However, this will not impact the value of the $d_{\min}^{\mathsf{b}}$ term.

This result is the sample complexity guarantee for the first phase of the algorithm, which learns τ, the structure of the minimal RDP that is equivalent to the underlying RDP. If δ is the desired failure probability of the complete algorithm, `RegORL` executes ADACT–H so that its success probability is

at least $1-\delta/2$. This means that with the same probability, $\mathcal{D}'_2$ is an MDP dataset with the properties listed in Section 3. As a consequence, provided that OFFLINERL is some generic $(\varepsilon, \delta/2)$-PAC offline RL algorithm for MDPs, the output of RegORL is an ε-optimal policy with probability $1-\delta$.

Theorem 7. *Consider a dataset $\mathcal{D}$ of episodes sampled from an RDP $\mathbf{R}$ and a regular policy $\pi^{\mathsf{b}} \in \Pi_{\mathbf{R}}$. For any $\varepsilon \in (0, H]$ and $0 < \delta < 1$, if* OFFLINERL *is an $(\varepsilon, \delta/2)$-PAC Offline algorithm for MDPs with sample complexity N_{m}, then, the output of* RegORL$(\mathcal{D}, \varepsilon, \delta)$ *is an ε-optimal policy in $\mathbf{R}$, with probability at least $1-\delta$, provided that $|\mathcal{D}| \geq 2\max\{N_{\delta/2}, N_{\mathsf{m}}\}$.*

As we can see, the sample complexity requirement separates for the two phases. While N_δ is due to the RDP learning component, defined in Theorem 6, the quantity N_{m} completely depends on the offline RL algorithm for MDPs that is adopted. Among other terms, the performance guarantees of offline algorithms can often be characterized through the single-policy concentrability for MDPs, C^*. However, since states become observations in the associated MDP, due to the properties of Proposition 3, C^* coincides with $C^*_{\mathbf{R}}$, the RDP single-policy concentrability of Definition 1.

In Appendix D, we demonstrate a specific instantiation of RegORL with an off-the-shelf offline RL algorithm from the literature by Li et al. [16], which yields the following expression for N_{m}:

$$N_{\mathsf{m}} = \frac{c_N\, H^3 Q C^*_{\mathbf{R}} \log \frac{2NH}{\delta}}{\varepsilon^2},$$

where $c_N > 0$ is a constant.

To eliminate the dependence on $d^{\mathsf{b}}_{\min}$, we develop a variant of ADACT–H which does not learn a complete RDP. Rather it only reconstruct a subset of states that are likely under the behavior policy. The algorithm, which we call ADACT–H–A (for "approximation"), is defined in Appendix C.3. Theorem 8 is an upper bound on the sample complexity of ADACT–H–A, that takes the accuracy ε as input and returns the transition function of an $\varepsilon/2$-approximate RDP $\mathbf{R}'$, whose optimal policy is $\varepsilon/2$-optimal for the original RDP $\mathbf{R}$. By performing a Markov transformation for $\mathbf{R}'$ and using an $(\varepsilon/2, \delta/2)$-PAC Offline algorithm for MDPs, we can compute an ε-optimal policy for $\mathbf{R}$.

Theorem 8. *Consider a dataset $\mathcal{D}$ of episodes sampled from an RDP $\mathbf{R}$ and a regular policy $\pi^{\mathsf{b}} \in \Pi_{\mathbf{R}}$. A modified version of* ADACT–H *called with $\mathcal{D}$, $\delta = \delta_1/2QAO$ and $\varepsilon \in (0, H]$, returns the transition function of an $\varepsilon/2$-approximate RDP $\mathbf{R}'$ with probability $1-\delta_1$ if $|\mathcal{D}| \geq N_{\delta_1}$, where*

$$N_{\delta_1} = \frac{252 HQAOC^*_{\mathbf{R}} \log(16QAO/\delta_1)}{\varepsilon\, \mu_0} \sqrt{H \log(2ARO)} = \mathcal{O}\left(\frac{H^{3/2} QAOC^*_{\mathbf{R}} \log(Q/\delta_1)}{\varepsilon\, \mu_0}\right).$$

5 Sample Complexity Lower Bound

The main result of this section is Theorem 9, a sample complexity lower bound for offline RL in RDPs. It shows that the dataset size required by any RL algorithm scales with the relevant parameters.

Theorem 9. *For any $(C^*_{\mathbf{R}}, H, \varepsilon, \mu_0)$ satisfying $C^*_{\mathbf{R}} \geq 2$, $H \geq 2$ and $\varepsilon \leq \mu_0/32$, there exists an RDP with horizon H, L^{p}_1-distinguishability μ_0 and $Q < 4H$ states, and a regular behavior policy π^{b} with RDP single-policy concentrability $C^*_{\mathbf{R}}$, such that for $\mathcal{D}$ generated using π^{b} and $\mathbf{R}$, if*

$$|\mathcal{D}| \notin \Omega\Big(\frac{H}{\mu_0} + \frac{C^*_{\mathbf{R}} H^2}{\varepsilon^2}\Big) \tag{4}$$

then $\mathbb{P}(V^*_0 - V^{\widehat{\pi}}_0 > \varepsilon) \geq 1/4$ for any algorithm $\mathfrak{A} : \mathcal{D} \mapsto \widehat{\pi}$.

The proof relies on worst-case RDP instances that carefully combine two-armed bandits with noisy parity functions. This last component allows to capture the difficulty of learning in presence of temporal dependencies. Figure 2 shows an RDP in this class. At the beginning of each episode, the observation causes a transition towards either the bandit component (bottom branch) or the noisy parity function (top branches). Acting optimally in the two parity branches requires to predict the output of a parity function, which depends on some unknown binary code (of length 3, in the example). The first term in Theorem 9 is due to this component, because the code scales linearly with H, or Q, while the amount of information revealed about the code is controlled by μ_0. The second term is caused by the required optimality in the bandit.

Differently from this lower bound, the parameter μ_0, appearing in the upper bounds of Theorems 6 and 8, is a L^{p}_∞-distinguishability. However, the two are related, since $L^{\mathsf{p}}_1(q, q') \geq L^{\mathsf{p}}_\infty(q, q')$.

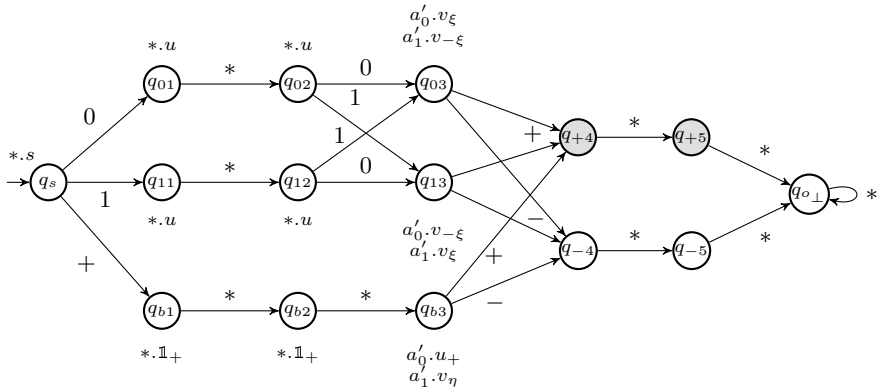

Figure 2: One episodic RDP instance $\mathbf{R}_{101,1} \in \mathbb{R}(L, H, \xi, \eta)$, associated to the parity function f_{101}, with code 101, and the optimal arm a'_1. The length is $L = |101| = 3$, the horizon $H = 5$, the noise parameter ξ and the bandit bonus parameter is η. The transition function only depends on the observations, not the actions. The output distributions are: $u = \text{unif}\{0, 1\}$, $u_+ = \text{unif}\{+, -\}$, $v_\alpha(+) = (1 + \alpha)/2$, $v_\alpha(-) = (1 - \alpha)/2$. The star denotes any symbol. If the label of a state q is $a.d$, then the observation function is $\theta_o(q, a) = d$. Refer to Appendix E for details.

Intuitively, the L_1^{p}-distinguishability accounts for all the information that is available as differences in episode probabilities. The L_∞^{p}-distinguishability, on the other hand, quantifies the maximum the difference in probability associated to specific suffixes. This is the information used by the algorithm and the one appearing in the two upper bounds.

6 Conclusion

In this paper we propose an algorithm for Offline RL in episodic Regular Decision Processes. Our algorithm exploits automata learning techniques to reduce the problem of RL in RDPs, in which observations and rewards are non-Markovian, into standard offline RL for MDPs. We provide the first high-probability sample complexity guarantees for this setting, as well as a lower bound that shows how its complexity relates to the parameters that characterize the decision process and the behavior policy. We identify the RDP single-policy concentrability as an analogous quantity to the one used for MDPs in the literature. Our sample complexity upper bound depends on the L_∞^{p}-distinguishability of the behavior policy. As a future work, we plan to investigate if any milder notion of distinguishability also suffices. This is motivated by our lower bound which only involves the L_1^{p}-distinguishability over the same policy. Finally, our results have strong implications for online learning in RDPs, which is a relevant setting to be explored.

Acknowledgments

Roberto Cipollone is partially supported by the EU H2020 project AIPlan4EU (No. 101016442), the ERC-ADG White-Mech (No. 834228), the EU ICT-48 2020 project TAILOR (No. 952215), the PRIN project RIPER (No. 20203FFYLK), and the PNRR MUR project FAIR (No. PE0000013). Anders Jonsson is partially supported by the EU ICT-48 2020 project TAILOR (No. 952215), AGAUR SGR, and the Spanish grant PID2019-108141GB-I00. Alessandro Ronca is partially supported by the ERC project WhiteMech (No. 834228), and the ERC project ARiAT (No. 852769). Mohammad Sadegh Talebi is partially supported by the Independent Research Fund Denmark, grant number 1026-00397B.

References

[1] Martin L. Puterman. *Markov Decision Processes: Discrete Stochastic Dynamic Programming*. Wiley, 1994.

[2] Fahiem Bacchus, Craig Boutilier, and Adam J. Grove. Rewarding behaviors. In *AAAI*, pages 1160–1167, 1996.

[3] Ronen I. Brafman and Giuseppe De Giacomo. Regular Decision Processes: A Model for Non-Markovian Domains. In *IJCAI*, pages 5516–5522, 2019.

[4] Leslie Pack Kaelbling, Michael L. Littman, and Anthony R. Cassandra. Planning and acting in partially observable stochastic domains. *Artif. Intell.*, 101(1–2):99–134, 1998.

[5] Christos H. Papadimitriou and John N. Tsitsiklis. The complexity of Markov decision processes. *Mathematics of Operations Research*, 12(3):441–450, 1987.

[6] Chi Jin, Sham M. Kakade, Akshay Krishnamurthy, and Qinghua Liu. Sample-efficient reinforcement learning of undercomplete POMDPs. In *NeurIPS*, 2020.

[7] Hongyi Guo, Qi Cai, Yufeng Zhang, Zhuoran Yang, and Zhaoran Wang. Provably efficient offline reinforcement learning for partially observable Markov decision processes. In *ICML*, pages 8016–8038, 2022.

[8] Zhaohan Daniel Guo, Shayan Doroudi, and Emma Brunskill. A PAC RL algorithm for episodic POMDPs. In *AISTATS*, pages 510–518, 2016.

[9] Kamyar Azizzadenesheli, Alessandro Lazaric, and Animashree Anandkumar. Reinforcement learning of pomdps using spectral methods. In *COLT*, pages 193–256, 2016.

[10] Borja Balle, Jorge Castro, and Ricard Gavaldà. Learning probabilistic automata: A study in state distinguishability. *Theor. Comput. Sci.*, 473:46–60, 2013.

[11] Masatoshi Uehara and Wen Sun. Pessimistic model-based offline reinforcement learning under partial coverage. In *ICLR*, 2022.

[12] Ming Yin and Yu-Xiang Wang. Towards instance-optimal offline reinforcement learning with pessimism. In *NeurIPS*, pages 4065–4078, 2021.

[13] Jinglin Chen and Nan Jiang. Information-theoretic considerations in batch reinforcement learning. In *ICML*, pages 1042–1051, 2019.

[14] Tengyang Xie, Nan Jiang, Huan Wang, Caiming Xiong, and Yu Bai. Policy finetuning: Bridging sample-efficient offline and online reinforcement learning. In *NeurIPS*, pages 27395–27407, 2021.

[15] Paria Rashidinejad, Banghua Zhu, Cong Ma, Jiantao Jiao, and Stuart Russell. Bridging offline reinforcement learning and imitation learning: A tale of pessimism. In *NeurIPS*, pages 11702–11716, 2021.

[16] Gen Li, Laixi Shi, Yuxin Chen, Yuejie Chi, and Yuting Wei. Settling the sample complexity of model-based offline reinforcement learning. *CoRR*, abs/2204.05275, 2022.

[17] Wenhao Zhan, Baihe Huang, Audrey Huang, Nan Jiang, and Jason Lee. Offline reinforcement learning with realizability and single-policy concentrability. In *COLT*, pages 2730–2775, 2022.

[18] Ying Jin, Zhuoran Yang, and Zhaoran Wang. Is pessimism provably efficient for offline rl? In *ICML*, pages 5084–5096, 2021.

[19] Tongzheng Ren, Jialian Li, Bo Dai, Simon S Du, and Sujay Sanghavi. Nearly horizon-free offline reinforcement learning. In *NeurIPS*, pages 15621–15634, 2021.

[20] Masatoshi Uehara, Xuezhou Zhang, and Wen Sun. Representation learning for online and offline rl in low-rank mdps. In *ICLR*, 2022.

[21] Philip Thomas and Emma Brunskill. Data-efficient off-policy policy evaluation for reinforcement learning. In *International Conference on Machine Learning*, pages 2139–2148. PMLR, 2016.

[22] Hamid Reza Maei, Csaba Szepesvári, Shalabh Bhatnagar, and Richard S Sutton. Toward off-policy learning control with function approximation. In *ICML*, volume 10, pages 719–726, 2010.

[23] Nathan Kallus and Masatoshi Uehara. Double reinforcement learning for efficient off-policy evaluation in markov decision processes. *The Journal of Machine Learning Research*, 21(1):6742–6804, 2020.

[24] Masatoshi Uehara, Chengchun Shi, and Nathan Kallus. A review of off-policy evaluation in reinforcement learning. *arXiv preprint arXiv:2212.06355*, 2022.

[25] Eden Abadi and Ronen I. Brafman. Learning and solving Regular Decision Processes. In *IJCAI*, pages 1948–1954, 2020.

[26] Rodrigo Toro Icarte, Ethan Waldie, Toryn Q. Klassen, Richard Anthony Valenzano, Margarita P. Castro, and Sheila A. McIlraith. Learning reward machines for partially observable reinforcement learning. In *NeurIPS*, pages 15497–15508, 2019.

[27] Alessandro Ronca and Giuseppe De Giacomo. Efficient PAC reinforcement learning in regular decision processes. In *IJCAI*, pages 2026–2032, 2021.

[28] Alessandro Ronca, Gabriel Paludo Licks, and Giuseppe De Giacomo. Markov abstractions for PAC reinforcement learning in non-Markov decision processes. In *IJCAI*, pages 3408–3415, 2022.

[29] Rodrigo Toro Icarte, Toryn Q. Klassen, Richard Anthony Valenzano, and Sheila A. McIlraith. Using reward machines for high-level task specification and decomposition in reinforcement learning. In *ICML*, pages 2112–2121, 2018.

[30] Zhe Xu, Ivan Gavran, Yousef Ahmad, Rupak Majumdar, Daniel Neider, Ufuk Topcu, and Bo Wu. Joint inference of reward machines and policies for reinforcement learning. In *ICAPS*, pages 590–598, 2020.

[31] Giuseppe De Giacomo, Luca Iocchi, Marco Favorito, and Fabio Patrizi. Foundations for restraining bolts: Reinforcement learning with LTLf/LDLf restraining specifications. In *ICAPS*, pages 128–136, 2019.

[32] Giuseppe De Giacomo, Marco Favorito, Luca Iocchi, Fabio Patrizi, and Alessandro Ronca. Temporal logic monitoring rewards via transducers. In *KR*, pages 860–870, 2020.

[33] Mohammadhosein Hasanbeig, Natasha Yogananda Jeppu, Alessandro Abate, Tom Melham, and Daniel Kroening. DeepSynth: automata synthesis for automatic task segmentation in deep reinforcement learning. In *AAAI*, pages 7647–7656, 2021.

[34] Hippolyte Bourel, Anders Jonsson, Odalric-Ambrym Maillard, and Mohammad Sadegh Talebi. Exploration in reward machines with low regret. In *International Conference on Artificial Intelligence and Statistics*, pages 4114–4146. PMLR, 2023.

[35] Marcus Hutter. Feature reinforcement learning: Part I. Unstructured MDPs. *J. Artif. Gen. Intell.*, 1(1): 3–24, 2009.

[36] Marcus Hutter. Extreme state aggregation beyond Markov decision processes. *Theor. Comp. Sci.*, pages 73–91, 2016.

[37] Joel Veness, Kee Siong Ng, Marcus Hutter, William T. B. Uther, and David Silver. A monte-carlo AIXI approximation. *J. Artif. Intell. Res.*, 40:95–142, 2011.

[38] Sultan Javed Majeed and Marcus Hutter. On Q-learning convergence for non-Markov decision processes. In *IJCAI*, pages 2546–2552, 2018.

[39] Odalric-Ambrym Maillard, Rémi Munos, and Daniil Ryabko. Selecting the state-representation in reinforcement learning. In *NeurIPS*, pages 2627–2635, 2011.

[40] Phuong Nguyen, Odalric-Ambrym Maillard, Daniil Ryabko, and Ronald Ortner. Competing with an infinite set of models in reinforcement learning. In *AISTATS*, pages 463–471, 2013.

[41] Odalric-Ambrym Maillard, Phuong Nguyen, Ronald Ortner, and Daniil Ryabko. Optimal regret bounds for selecting the state representation in reinforcement learning. In *ICML*, pages 543–551, 2013.

[42] Ronald Ortner, Matteo Pirotta, Alessandro Lazaric, Ronan Fruit, and Odalric-Ambrym Maillard. Regret bounds for learning state representations in reinforcement learning. In *NeurIPS*, pages 12717–12727, 2019.

[43] Tor Lattimore, Marcus Hutter, and Peter Sunehag. The sample-complexity of general reinforcement learning. In *ICML*, 2013.

[44] Jie Fu and Ufuk Topcu. Probably approximately correct MDP learning and control with temporal logic constraints. In *RSS*, 2014.

[45] Mohammadhosein Hasanbeig, Alessandro Abate, and Daniel Kroening. Cautious reinforcement learning with logical constraints. In *AAMAS*, pages 483–491, 2020.

[46] Lewis Hammond, Alessandro Abate, Julian Gutierrez, and Michael J. Wooldridge. Multi-agent reinforcement learning with temporal logic specifications. In *AAMAS*, pages 583–592, 2021.

[47] Alper Kamil Bozkurt, Yu Wang, Michael M. Zavlanos, and Miroslav Pajic. Control synthesis from linear temporal logic specifications using model-free reinforcement learning. In *ICRA*, pages 10349–10355, 2020.

[48] Ernst Moritz Hahn, Mateo Perez, Sven Schewe, Fabio Somenzi, Ashutosh Trivedi, and Dominik Wojtczak. Omega-regular objectives in model-free reinforcement learning. In *TACAS*, pages 395–412, 2019.

[49] Jayakumar Subramanian, Amit Sinha, Raihan Seraj, and Aditya Mahajan. Approximate information state for approximate planning and reinforcement learning in partially observed systems. *The Journal of Machine Learning Research*, 23(1):483–565, 2022.

[50] Karl Johan Åström. Optimal control of Markov processes with incomplete state information. *Journal of Mathematical Analysis and Applications*, 10(1):174–205, 1965.

[51] Satinder Singh, Michael L. Littman, Nicholas K. Jong, David Pardoe, and Peter Stone. Learning predictive state representations. In *ICML*, pages 712–719, 2003.

[52] Michael R. James and Satinder Singh. Learning and discovery of predictive state representations in dynamical systems with reset. In *ICML*, 2004.

[53] Michael H. Bowling, Peter McCracken, Michael James, James Neufeld, and Dana F. Wilkinson. Learning predictive state representations using non-blind policies. In *ICML*, pages 129–136, 2006.

[54] Alex Kulesza, Nan Jiang, and Satinder Singh. Spectral learning of predictive state representations with insufficient statistics. In *AAAI*, pages 2715–2721, 2015.

[55] Wenhao Zhan, Masatoshi Uehara, Wen Sun, and Jason D. Lee. PAC reinforcement learning for predictive state representations. In *ICLR*, 2023.

[56] Edward F Moore. Gedanken-experiments on sequential machines. *Automata studies*, 34:129–153, 1956.

[57] John E. Hopcroft, Rajeev Motwani, and Jeffrey D. Ullman. *Introduction to Automata Theory, Languages, and Computation*. Addison-Wesley Longman Publishing Co., Inc., 2006.

[58] Jeffrey Shallit. *A second course in formal languages and automata theory*. Cambridge University Press, 2008.

[59] Ronen I. Brafman, Giuseppe De Giacomo, and Fabio Patrizi. LTLf/LDLf non-Markovian rewards. In *AAAI*, pages 1771–1778, 2018.

[60] Maor Gaon and Ronen I. Brafman. Reinforcement learning with non-Markovian rewards. In *AAAI*, pages 3980–3987, 2020.

[61] Andrew Kachites McCallum. *Reinforcement Learning with Selective Perception and Hidden State*. PhD thesis, University of Rochester, 1996.

[62] Jorma Rissanen. A universal data compression system. *IEEE Transactions on information theory*, 29(5): 656–664, 1983.

[63] Dana Ron, Yoram Singer, and Naftali Tishby. The power of amnesia: Learning probabilistic automata with variable memory length. *Mach. Learn.*, 25(2-3):117–149, 1996.

[64] Andreas Maurer and Massimiliano Pontil. Empirical Bernstein bounds and sample-variance penalization. In *COLT*, 2009.

[65] Christoph Dann, Tor Lattimore, and Emma Brunskill. Unifying PAC and regret: Uniform PAC bounds for episodic reinforcement learning. In *NeurIPS*, pages 5713–5723, 2017.

[66] Thomas M. Cover and Joy A. Thomas. *Elements of Information Theory (2. Ed.)*. Wiley, 2006. ISBN 978-0-471-24195-9.

[67] Dana Ron, Yoram Singer, and Naftali Tishby. On the learnability and usage of acyclic probabilistic finite automata. *J. Comput. Syst. Sci.*, 56(2):133–152, 1998.

[68] Borja Balle. *Learning Finite-State Machines: Statistical and Algorithmic Aspects*. PhD thesis, Universitat Politècnica de Catalunya, 2013.

[69] Balázs Szörényi. Characterizing statistical query learning: Simplified notions and proofs. In *ALT*, pages 186–200, 2009.

[70] Avrim Blum, Merrick L. Furst, Jeffrey C. Jackson, Michael J. Kearns, Yishay Mansour, and Steven Rudich. Weakly learning DNF and characterizing statistical query learning using Fourier analysis. In *STOC*, pages 253–262, 1994.

[71] Sumegha Garg, Ran Raz, and Avishay Tal. Extractor-based time-space lower bounds for learning. In *STOC*, pages 990–1002, 2018.

[72] Sumegha Garg, Pravesh K. Kothari, Pengda Liu, and Ran Raz. Memory-sample lower bounds for learning parity with noise. *CoRR*, abs/2107.02320, 2021.

Appendices

A Extended Discussion of Related Work **15**

A.1 Offline RL in MDPs . . . 15

A.2 Non-Markov Rewards and Reward Machines . . . 15

A.3 Feature MDPs . . . 15

A.4 State Representations . . . 16

A.5 General RL . . . 16

B RDP properties **16**

B.1 RDPs and Regular Policies . . . 16

B.2 Markov Transformation . . . 17

C Sample Complexity of ADACT–H **18**

C.1 Preliminaries . . . 18

C.2 Proof of Theorem 6 . . . 19

C.3 Proof of Theorem 8 . . . 21

C.4 Distinguishability Parameters . . . 23

D `RegORL` with Subsampled `VI-LCB` **24**

E Sample Complexity Lower Bound: Proof of Theorem 9 **25**

E.1 Learning parity with noise . . . 25

E.2 Class of hard RDP instances . . . 26

E.3 Proof of Theorem 9 . . . 27

A Extended Discussion of Related Work

Some of the related work mentioned in the introduction requires a more extensive discussion, which we provide below.

A.1 Offline RL in MDPs

There is a rich and growing literature on offline RL in MDPs; see, e.g., [11, 12, 13, 14, 15, 16, 17, 18, 19, 20]. A closely related line of work is off-policy learning in MDPs [21, 22, 23]; we refer to the recent survey [24] for a discussion on how the various settings are related. For offline RL in MDPs, the papers cited above report learning algorithms with theoretical guarantees on their sample efficiency. The majority of these algorithms are designed based on the *pessimism principle*. While most literature focuses on tabular MDPs, the case of linear function approximation is discussed in some papers, e.g., [20]. In several settings, the presented algorithms are shown to be minimax optimal. For instance, in the case of tabular episodic MDPs, it is established in [16] that the optimal sample complexity depends on the size of state-space, episode length, as well as some notion of concentrability reflecting the distribution mismatch between the behavior and optimal policy.

A.2 Non-Markov Rewards and Reward Machines

MDPs with non-Markov rewards are a special case of NMDPs, where only rewards are non-Markovian. Namely, observed states satisfy the Markov property, while rewards may depend on the history of past states. The specific kind of non-Markov rewards considered in the literature amount to the subclass of RDPs where the automaton's state is only needed to predict the next reward—while the next observation (i.e., state) can be predicted from the last observation.

Non-Markov rewards can already be found in [2], where the reward function is specified in a temporal logic of the past. More recently, the setting has been revisited with so-called reward machines [29] as well as with temporal logics of the future on finite traces [59, 32]. A *reward machine* is a finite automaton (or transducer) used to specify a non-Markovian reward function. Reward machines have been introduced in [29] along with an RL algorithm that assumes the reward machine to be known. RL algorithms with unknown reward machine, or equivalently unknown temporal specification, are presented in [60, 30], with no performance guarantees. Reward machines have been generalised so as to predict observations as well [26], which makes them equivalent to RDPs—as mentioned above.

The first performance bounds for RL with reward machines have been recently established in [34]. The work shows regret bounds that take into account the structure provided by a reward machine, and hence improve over the bounds that one would obtain by naively adapting regret bounds for MDPs.

An automaton-based method for dealing with non-Markov sparse rewards is proposed in [33].

A.3 Feature MDPs

Hutter [35] introduces *feature MDPs*, where histories are mapped to states by a feature map. It relates to our work since the map provided by the transition function of an RDP is a feature map. The concrete feature maps considered in [35] are based on U-Trees [61]. The idea is also revisited in [37] with Prediction Suffix Trees (PSTs) [62, 63]. Both U-Trees and PSTs are suffix trees. There are cases when their size is exponential in the horizon, while an automaton of linear size exists. For instance, in the case of a parity condition over the history. To see this, note that a suffix x of a bit string bx does not suffice to establish parity of bx. In fact, the parity of $0x$ is different from the parity of $1x$. Thus a suffix tree for parity must encode all suffixes, and hence it will have a number of leaves that is exponential in the maximum length of a relevant string—the horizon H in the case of episodic RL.

Hutter [36] provides several formal characterisations of feature maps. All the characterisations are less restrictive than the one defined by an RDP. In particular, their most restrictive characterisation is given in their Equation (6). It only requires to preserve the ability to predict rewards, not observations. The states of our automata suffice to predict observations as well. It is unclear whether automata techniques can be used to learn directly abstractions that do not preserve the dynamics entirely.

Majeed and Hutter [38] study convergence of Q-learning when executed over the state space of an MDP that underlies a non-Markov decision processes. Such a state space corresponds to the state space of the RDP, but they do not consider the problem of learning the state space.

A.4 State Representations

State representations are maps from histories to a finite state space. The map defined by the transition function of an RDP is a state representation. The studies on state representations [39, 40, 41, 42] focus on regret bounds for RL given a candidate set of state representations. While in our case the state representations are concretely defined by the class of finite-state automata, in their case they are arbitrary maps. This is a challenging setting, which does not allow for taking advantage of the properties of specific classes of state representations. The regret bounds in [39, 41, 42] are for finite sets of state representations, and they all show a linear dependency on the cardinality of the given set of state representations. In our case, the candidate state representations correspond to the set of automata with at most $Q = 2(AO)^H$ states and AO input letters. Such a set contains at least Q^{QAO} automata—the number of distinct transition functions. Thus, if we could apply their bounds to our setting, they would have an exponential dependency on the number Q of RDP states, and hence a doubly-exponential dependency on the horizon H. We avoid this dependency, obtaining polynomial bounds in the mentioned quantities.

Nguyen et al. [40] consider the case of a countably infinite set of state representations, and present an algorithm whose regret bound does not show a dependency such as the one discussed above. Instead, they show a dependency on a quantity K_0, which admits several interpretations, including one based on the descriptional complexity of the candidate state representations. Thus, there may be a way to relate K_0 to the quantities we use in our bounds. However, the formal relationship between the two, if any, renders highly non-trivial, which prevents one to use their ideas in the case of RDPs. We believe establishing a fomal relationship between their model and RDPs is an interesting, yet challenging, topic for future work. Furthermore, it should be stressed that even if the relationship was clear and one could borrow ideas from [40], the resulting sample complexity bound would have to grow as $1/\varepsilon^3$ in view of their regret bound scaling as $T^{2/3}$. In contrast, our bounds achieve an optimal dependency of $1/\varepsilon^2$ on ε.

A.5 General RL

Lattimore et al. [43] consider General RL as the problem of RL when we are given a set of candidate NDMPs, rather than assuming the decision process to belong to a fixed class. Similarly to the works on state representations, it does not commit to specific classes of NMDPs, and their bounds have a linear dependency on the number of candidate models. As remarked above, in our setting, it amounts to an exponential dependency on the number of states of the candidate RDPs, and hence a doubly-exponential dependency on the horizon; we avoid such exponential dependencies.

B RDP properties

In this section we prove several properties of RDPs that are stated in Sections 2 and 3.

B.1 RDPs and Regular Policies

In this section, we prove Propositions 1 and 2.

Proposition 1. *Consider an RDP* $\mathbf{R}$*, a regular policy* $\pi \in \Pi_{\mathbf{R}}$ *and two histories* h_1 *and* h_2 *in* $\mathcal{H}_t$*,* $t \in [H]$*, such that* $\bar{\tau}(h_1) = \bar{\tau}(h_2)$*. For each suffix* $e_{t+1:H} \in \mathcal{E}_{H-t-1}$*, the probability of generating* $e_{t+1:H}$ *is the same for* h_1 *and* h_2*, i.e.* $\mathbb{P}(e_{t+1:H} \mid h_1, \pi, \mathbf{R}) = \mathbb{P}(e_{t+1:H} \mid h_2, \pi, \mathbf{R})$.

Proof. By induction on t. For $t = H$, all histories in $\mathcal{H}_H$ generate the empty suffix in $(\mathcal{ARO})^0$ with probability 1. For $t < H$, the probability of generating a suffix $aroe_{t+2:H}$ is

$$\begin{aligned}\mathbb{P}(aroe_{t+2:H} \mid h_1, \pi, \mathbf{R}) &= \pi(h_1, a) \cdot \mathbb{P}(r, o \mid \bar{\tau}(h_1), a, \mathbf{R}) \cdot \mathbb{P}(e_{t+2:H} \mid h_1 ao, \pi, \mathbf{R}) \\ &= \pi(h_2, a) \cdot \mathbb{P}(r, o \mid \bar{\tau}(h_2), a, \mathbf{R}) \cdot \mathbb{P}(e_{t+2:H} \mid h_2 ao, \pi, \mathbf{R}) = \mathbb{P}(aroe_{t+2:H} \mid h_2, \pi, \mathbf{R}),\end{aligned}$$

where we have used the fact that π is regular, $\bar{\tau}(h_1) = \bar{\tau}(h_2)$, $\bar{\tau}(h_1 ao) = \tau(\bar{\tau}(h_1), ao) = \tau(\bar{\tau}(h_2), ao) = \bar{\tau}(h_2 ao)$, and the induction hypothesis. □

The following statement appears in the literature [3, Theorem 2], but the authors do not provide a complete proof, so for completeness we prove the statement here.

Proposition 2. *Each RDP* $\mathbf{R}$ *has at least one optimal policy* $\pi^* \in \Pi_{\mathbf{R}}$.

Proof. Given $\mathbf{R}$, consider any optimal policy $\pi^* : \mathcal{H} \to \Delta(\mathcal{A})$, not necessarily regular. We prove the statement by constructing a policy π and showing by induction on $t \in [H]$ that π is both optimal and regular. The base case is given by $t = H$. In this case, for an arbitrary $a \in \mathcal{A}$, define $\pi(h) := \mathbb{1}_a$ for each history $h \in \mathcal{H}_H$. Since $V_H^{\pi}(h) = 0$ by definition, π is optimal for each history $h \in \mathcal{H}_H$, and regular since it always selects the same action.

For $t < H$, we first construct a new policy π_{c} which is the composition of policies π^* and π. Concretely, for each history $h \in \mathcal{H}_u$ such that $u \leq t$, $\pi_{\mathsf{c}}(h) = \pi^*(h)$ acts according to π^*, while for each history $h \in \mathcal{H}_u$ such that $u > t$, $\pi_{\mathsf{c}}(h) = \pi(h)$ acts according to π. Clearly, π_{c} is an optimal policy for $\mathbf{R}$ since π^* is optimal and since by induction, π is optimal for histories in $\mathcal{H}_u$, $u > t$.

Consider a pair of histories h_1 and h_2 in $\mathcal{H}_t$ such that $\bar{\tau}(h_1) = \bar{\tau}(h_2)$ but $\pi_{\mathsf{c}}(h_1) \neq \pi_{\mathsf{c}}(h_2)$. Define $\pi(h_1) := \pi(h_2) := \pi_{\mathsf{c}}(h_1)$. Since the value function can be written as an expectation over suffixes, due to Proposition 1 and the fact that π is regular for histories in $\mathcal{H}_u$, $u > t$, we have $V_t^{\pi}(h_1) = V_t^{\pi}(h_2)$. Since π_{c} is the same as π for histories in $\mathcal{H}_u$, $u > t$, this implies $V_t^{\pi}(h_1) = V_t^{\pi_{\mathsf{c}}}(h_1) \leq V_t^{\pi_{\mathsf{c}}}(h_2)$ since π_{c} is optimal for h_2. If we were to instead define $\pi(h_1) := \pi(h_2) := \pi_{\mathsf{c}}(h_2)$, we would obtain $V_t^{\pi_{\mathsf{c}}}(h_2) \leq V_t^{\pi_{\mathsf{c}}}(h_1)$. The only possibility is $V_t^{\pi_{\mathsf{c}}}(h_1) = V_t^{\pi_{\mathsf{c}}}(h_2)$, which is the same value achieved by the policy π. Hence π is optimal for h_1 and h_2.

We now repeat the same procedure for each pair of histories h_1 and h_2 in $\mathcal{H}_t$ such that $\bar{\tau}(h_1) = \bar{\tau}(h_2)$ but $\pi_{\mathsf{c}}(h_1) \neq \pi_{\mathsf{c}}(h_2)$. If necessary, we complete the definition of π by copying the action choices of π_{c}. The resulting policy π is optimal for each history $h \in \mathcal{H}_t$, and regular since it makes the same action choices for each pair of histories h_1 and h_2 in $h \in \mathcal{H}_t$ such that $\bar{\tau}(h_1) = \bar{\tau}(h_2)$. □

B.2 Markov Transformation

In this section, we verify the properties of the Markov transformation, which is the intermediate step that `RegORL` uses to recover the Markov property in the original dataset. This transformation has been formalized in Definition 2. We use $\mathcal{D}$ and $\mathcal{D}'$ to denote the original and the transformed datasets, respectively.

Proposition 3. *Let* $e_{0:H}$ *be an episode sampled from an episodic RDP* $\mathbf{R}$ *under a regular policy* $\pi \in \Pi_{\mathbf{R}}$*, with* $\pi(h, a) = \pi_{\mathsf{r}}(\bar{\tau}(h), a)$*. If* e'_H *is the Markov transformation of* e_H *with respect to* $\mathbf{R}$*, then* $\mathbb{P}(e'_H \mid \mathbf{R}, \pi) = \mathbb{P}(e'_H \mid \mathbf{M}_{\mathbf{R}}, \pi_{\mathsf{r}})$ *, where* $\mathbf{M}_{\mathbf{R}}$ *is the MDP associated to* $\mathbf{R}$*.*

Proof. For $t \in [H]$, let $e_t \in \mathcal{E}_t = (\mathcal{ARO})^{t+1}$ be an episode prefix in $\mathbf{R}$, $\phi(e_t) \in \mathcal{E}'_t = (\mathcal{ARQ})^{t+1}$ be its Markov transformation and $e'_t \in \mathcal{E}'_t$ be an episode of the associated MDP. The statement says that $\mathbb{P}(\phi(e_t) \mid \mathbf{R}, \pi) = \mathbb{P}(e'_t \mid \mathbf{M}_{\mathbf{R}}, \pi_{\mathsf{r}})$. We prove this by induction. For $t = 0$, we recall that the irrelevant quantities a_0, r_0 are constant and,

$$\begin{aligned}
\mathbb{P}(\phi(a_0 r_0 o_0) = a_0 r_0 q \mid \mathbf{R}, \pi) &= \sum_{o \in \mathcal{O}} \mathbb{I}(\tau(q_0, a_0 o) = q)\, \theta_{\mathsf{o}}(q_0, a_0, o) \\
&= T(q_0, a_0, q) \\
&= \mathbb{P}(e'_0 = a_0 r_0 q \mid \mathbf{M}_{\mathbf{R}}, \pi_{\mathsf{r}}) \qquad (5)
\end{aligned}$$

where $T : \mathcal{Q} \times \mathcal{A} \to \Delta(\mathcal{Q})$ is the transition function of $\mathbf{M}_{\mathbf{R}}$, from Definition 3. Due to the role of the dummy action, $T(q_0, a_0)$ is the initial distribution of the MDP.

For the inductive step, assume that $\mathbb{P}(\phi(e_{t-1}) \mid \mathbf{R}, \pi) = \mathbb{P}(e'_{t-1} \mid \mathbf{M}_{\mathbf{R}}, \pi_{\mathsf{r}})$. Then, for any $e' \in \mathcal{E}'_{t-1}$, $arq \in \mathcal{ARQ}$, if q' is the last element of e', we have

$$\begin{aligned}
&\mathbb{P}(\phi(e_t) = e' arq \mid \mathbf{R}, \pi) = \mathbb{P}(\phi(e_{t-1}) = e' \mid \mathbf{R}, \pi)\, \mathbb{P}(a_t r_t q_{t+1} = arq \mid \phi(e_{t-1}) = e', \mathbf{R}, \pi) \qquad (6) \\
&= \mathbb{P}(e'_{t-1} = e' \mid \mathbf{M}_{\mathbf{R}}, \pi_{\mathsf{r}})\, \mathbb{P}(a_t r_t q_{t+1} = arq \mid q_t = q', \mathbf{R}, \pi) \qquad (7) \\
&= \mathbb{P}(e'_{t-1} = e' \mid \mathbf{M}_{\mathbf{R}}, \pi_{\mathsf{r}})\, \pi_{\mathsf{r}}(q', a)\, \theta_{\mathsf{r}}(q', a, r) \sum_{o \in \mathcal{O}} \theta_{\mathsf{o}}(q', a, o)\, \mathbb{I}(q = \tau(q', ao)) \qquad (8) \\
&= \mathbb{P}(e'_{t-1} = e' \mid \mathbf{M}_{\mathbf{R}}, \pi_{\mathsf{r}})\, \pi_{\mathsf{r}}(q', a)\, \theta_{\mathsf{r}}(q', a, r)\, T(q', a, q) \qquad (9)
\end{aligned}$$

$$= \mathbb{P}(e'_t = e'arq \mid \mathbf{M}_{\mathbf{R}}, \pi_{\mathsf{r}}) \tag{10}$$

where, in (7), we have used the induction hypothesis and the fact that $a_t r_t q_{t+1}$ are Markov in q' by regularity of the policy. □

Thanks to this relation, the values of corresponding policies are also related in the following way.

Proposition 4. *Let $\pi \in \Pi_{\mathbf{R}}$ be a regular policy in $\mathbf{R}$ s.t. $\pi(h, a) = \pi_{\mathsf{r}}(\bar{\tau}(h), a)$. Then $V^{\pi}_{0,\mathbf{R}} = V^{\pi_{\mathsf{r}}}_{0,\mathbf{M}_{\mathbf{R}}}$, where $V^{\pi}_{0,\mathbf{R}}$ and $V^{\pi_{\mathsf{r}}}_{0,\mathbf{M}_{\mathbf{R}}}$ are the values in the respective decision process, and $V^{*}_{0,\mathbf{R}} = V^{*}_{0,\mathbf{M}_{\mathbf{R}}}$.*

Proof. The statement is composed of two parts. First, we show that $\mathbb{E}[V^{\pi}_{0,\mathbf{R}}] = \mathbb{E}[V^{\pi_{\mathsf{r}}}_{0,\mathbf{M}_{\mathbf{R}}}]$, which is a direct consequence of Proposition 3. Following the same convention as in the proof of Proposition 3, we use $\mathcal{E}'_t = (\mathcal{ARQ})^{t+1}$ and ϕ for the Markov transformation. Then,

$$\mathbb{E}[V^{\pi}_{0,\mathbf{R}}] = \sum_{r_1 \dots r_H \in \mathcal{R}^{H+1}} \mathbb{P}(r_{1:H} = r_1 \dots r_H \mid \mathbf{R}, \pi) \sum_{i=1}^{H} r_i \tag{11}$$

$$= \sum_{e' \in \mathcal{E}'_H} \mathbb{P}(\phi(e_H) = e' \mid \mathbf{R}, \pi) \sum_{i=1}^{H} r_i \tag{12}$$

$$= \sum_{e' \in \mathcal{E}'_H} \mathbb{P}(e'_H = e' \mid \mathbf{M}_{\mathbf{R}}, \pi_{\mathsf{r}}) \sum_{i=1}^{H} r_i \tag{13}$$

$$= \mathbb{E}[V^{\pi_{\mathsf{r}}}_{0,\mathbf{M}_{\mathbf{R}}}] \tag{14}$$

For the second part of the statement, let $\Pi_{\mathbf{R}}$ and $\Pi_{\mathbf{M}}$ be the regular and the Markov policies in $\mathbf{R}$ and $\mathbf{M}_{\mathbf{R}}$, respectively. Then, using Proposition 2 and the first part of this statement,

$$V^{*}_{0,\mathbf{R}} = \max_{\pi \in \Pi_{\mathbf{R}}} \mathbb{E}[V^{\pi}_{0,\mathbf{R}}] = \max_{\pi \in \Pi_{\mathbf{R}}} \mathbb{E}[V^{\pi_{\mathsf{r}}}_{0,\mathbf{M}_{\mathbf{R}}}] = \max_{\pi_{\mathsf{r}} \in \Pi_{\mathbf{M}}} \mathbb{E}[V^{\pi_{\mathsf{r}}}_{0,\mathbf{M}_{\mathbf{R}}}] = V^{*}_{0,\mathbf{M}_{\mathbf{R}}} \tag{15}$$

□

Corollary 5 is a consequence of the two parts of Proposition 4. Since $V^{\pi}_{0,\mathbf{R}} = V^{\pi_{\mathsf{r}}}_{0,\mathbf{M}_{\mathbf{R}}}$ and the value achieved by the optimal policy in the respective model is the same, ε-optimality of π in $\mathbf{R}$ implies ε-optimality of π_{r} in $\mathbf{M}_{\mathbf{M}}$, and vice versa.

C Sample Complexity of ADACT–H

In this section we prove high-probability upper bounds on the sample complexity of ADACT–H.

C.1 Preliminaries

We first state Hoeffding's inequality for Bernoulli variables. In what follows we take $\log$ to be the natural logarithm.

Lemma 10 (Hoeffding's inequality)**.** *Let $X_1, \dots, X_N$ be N independent random Bernoulli variables with the same expected value $\mathbb{E}[X_1] = p$, and let $\widehat{p}_N = \sum_{i=1}^{N} X_i/N$ be an empirical estimate of p. Then, for any $\delta \in (0, 1)$,*

$$\mathbb{P}\left(|\widehat{p}_N - p| \geq \sqrt{\frac{\log(2/\delta)}{2N}} \right) \leq \delta. \tag{16}$$

An alternative to Hoeffding's inequality is the empirical Bernstein inequality, which can be expressed as follows for Bernoulli variables [64, 65].

Lemma 11 (Empirical Bernstein inequality)**.** *Let $X_1, \dots, X_N$ be N independent random Bernoulli variables with the same expected value $\mathbb{E}[X_1] = p$, and let $\widehat{p}_N = \sum_{i=1}^{N} X_i/N$ be an empirical estimate of p. Then, for any $\delta \in (0, 1)$,*

$$\mathbb{P}\left(|\widehat{p}_N - p| \geq \sqrt{\frac{2\widehat{p}\log(4/\delta)}{N}} + \frac{14\log(4/\delta)}{3N} \right) \leq \delta. \tag{17}$$

If $X \sim p_X$ is a discrete random variable, the entropy of X is $H(X) = -\sum_{x \in \mathcal{X}} p_X(x) \log p_X(x)$. Further, for $x \in (0,1)$, we define the binary entropy function as $H_2(x) = -x\log(x) - (1-x)\log(1-x)$. If $(X,Y) \sim p_{XY}$ are two discrete variables, the conditional entropy is $H(Y \mid X) = \sum_{x \in \mathcal{X}} p_X(x)\, H(Y \mid X = x)$. The mutual information is $I(X;Y) = I(Y;X) = D_{\mathrm{KL}}(p_{XY} \parallel p_X \cdot p_Y)$, where D_{KL} is the Kullback–Leibler divergence. If X, Y, Z are three random variables, we write $X \to Y \to Z$ if the conditional distribution of Z does not depend on X, given Y. With these definition, we state Fano's inequality, as one can find in Cover and Thomas [66], (2.140).

Theorem 12 (Fano's inequality)**.** *Let $X \to Y \to \hat{X}$, for $X, \hat{X} \in \mathcal{X}$ and $P_e = \mathbb{P}(\hat{X} \neq X)$. Then,*

$$H_2(P_e) + P_e \log(|\mathcal{X}| - 1) \geq H(X \mid Y) \tag{18}$$

C.2 Proof of Theorem 6

In this section we prove Theorem 6, which states a high-probability upper bound on the sample complexity of ADACT–H. The first two lemmas are adaptations of Lemmas 19 and 20 in Balle et al. [10] to the episodic setting.

Lemma 13. *For $t \in [H]$, let $\mathcal{X}_1$ and $\mathcal{X}_2$ be multisets sampled from distributions p_1 and p_2 in $\Delta(\mathcal{E}_{H-t-1})$. If $p_1 = p_2$, then* TESTDISTINCT$(t, \mathcal{X}_1, \mathcal{X}_2, \delta)$ *returns False with probability $1 - \delta$.*

Proof. For each $i \in \{1,2\}$ and each trace $e \in \mathcal{E}_{H-t-1}$, we can view each episode as a random Bernoulli variable with expected value $p_i(e)$ that takes value 1 if we observe e, and 0 otherwise. Let $\widehat{p}_i(e) = \sum_{x \in \mathcal{X}_i} \mathbb{I}(x = e)/|\mathcal{X}_i|$ be the empirical estimate of p_i, i.e. the proportion of elements in $\mathcal{X}_i$ equal to e. For each $i \in \{1,2\}$, each $u \in [H-t-1]$ and each prefix $e_{0:u} \in \mathcal{E}_u$, Hoeffding's inequality yields

$$\mathbb{P}\left(|\widehat{p}_i(e_{0:u}\,*) - p_i(e_{0:u}\,*)| \geq \sqrt{\frac{\log(2/\delta_{\mathsf{s}})}{2|\mathcal{X}_i|}} \right) \leq \delta_{\mathsf{s}}.$$

The total number of non-empty prefixes of $\mathcal{E}_{H-t-1}$ equals a geometric sum:

$$(ARO)^1 + \cdots + (ARO)^{H-t} = \frac{(ARO)^{H+1-t} - 1}{ARO - 1} - 1 \leq 2(ARO)^{H-t}.$$

Choosing $\delta_{\mathsf{s}} = \delta/4(ARO)^{H-t}$ and taking a union bound implies that the above inequality holds for each $i \in \{1,2\}$ and each $e_{0:u}$ simultaneously with probability $1 - 4(ARO)^{H-t}\delta_{\mathsf{s}} = 1 - \delta$, implying

$$\begin{aligned} L^{\mathsf{p}}_{\infty}(\mathcal{X}_1, \mathcal{X}_2) = \max_{u, e_{0:u}} |\widehat{p}_1(e_{0:u}*) - \widehat{p}_2(e_{0:u}*)| &\leq L^{\mathsf{p}}_{\infty}(p_1, p_2) + \sqrt{\frac{\log(2/\delta_{\mathsf{s}})}{2|\mathcal{X}_1|}} + \sqrt{\frac{\log(2/\delta_{\mathsf{s}})}{2|\mathcal{X}_2|}} \\ &\leq 0 + 2\sqrt{\frac{\log(2/\delta_{\mathsf{s}})}{2\min(|\mathcal{X}_1|, |\mathcal{X}_2|)}} = \sqrt{\frac{2\log(8(ARO)^{H-t}/\delta)}{\min(|\mathcal{X}_1|, |\mathcal{X}_2|)}}, \end{aligned}$$

which is precisely the condition under which TESTDISTINCT$(t, \mathcal{X}_1, \mathcal{X}_2, \delta)$ returns False. □

Lemma 14. *For $t \in [H]$, let $\mathcal{X}_1$ and $\mathcal{X}_2$ be multisets sampled from distributions p_1 and p_2 in $\Delta(\mathcal{E}_{H-t-1})$. If the L^{p}_{∞}-distinguishability of π^{b} is μ_0, then* TESTDISTINCT$(t, \mathcal{X}_1, \mathcal{X}_2, \delta)$ *returns True with probability $1 - \delta$ provided that*

$$\min(|\mathcal{X}_1|, |\mathcal{X}_2|) \geq \frac{8}{\mu_0^2} \left(\log(2(ARO)^{H-t}) + \log(4/\delta) \right).$$

Proof. Using the same argument as in the proof of Lemma 13, Hoeffding's inequality yields

$$\mathbb{P}\left(|\widehat{p}_i(e_{0:u}\,*) - p_i(e_{0:u}\,*)| > \sqrt{\frac{\log(2/\delta_{\mathsf{s}})}{2|\mathcal{X}_i|}} \right) \leq \delta_{\mathsf{s}},$$

with the inequality holding simultaneously for $i \in \{1,2\}$ and each prefix $e_{0:u}$ with probability $1 - \delta$ by choosing $\delta_{\mathsf{s}} = \delta/4(ARO)^{H-t}$. Choosing $\mu_0 \geq 4\sqrt{\log(2/\delta_{\mathsf{s}})/2|\mathcal{X}_i|}$ for each $i \in \{1,2\}$ yields

$$|\mathcal{X}_i| \geq \min(|\mathcal{X}_1|, |\mathcal{X}_2|) \geq \frac{8}{\mu_0^2} \log(2/\delta_{\mathsf{s}}) = \frac{8}{\mu_0^2} \left(\log(2(ARO)^{H-t}) + \log(4/\delta) \right).$$

In this case we have

$$L_\infty^{\mathsf{p}}(\mathcal{X}_1, \mathcal{X}_2) = \max_{u, e_{0:u}} |\widehat{p}_1(e) - \widehat{p}_2(e)| \geq L_\infty^{\mathsf{p}}(p_1, p_2) - \sqrt{\frac{\log(2/\delta_{\mathsf{s}})}{2|\mathcal{X}_1|}} - \sqrt{\frac{\log(2/\delta_{\mathsf{s}})}{2|\mathcal{X}_2|}}$$

$$\geq \mu_0 - \frac{\mu_0}{4} - \frac{\mu_0}{4} = \frac{\mu_0}{2} \geq 2\sqrt{\frac{\log(2/\delta_{\mathsf{s}})}{2\min(|\mathcal{X}_1|, |\mathcal{X}_2|)}} = \sqrt{\frac{2\log(8(ARO)^{H-t}/\delta)}{\min(|\mathcal{X}_1|, |\mathcal{X}_2|)}},$$

which is precisely the condition under which TESTDISTINCT$(t, \mathcal{X}_1, \mathcal{X}_2, \delta)$ returns True. □

We are now ready to prove Theorem 6, which we restate below:

Theorem 6. *Consider a dataset $\mathcal{D}$ of episodes sampled from an RDP $\mathbf{R}$ and a regular policy $\pi^{\mathsf{b}} \in \Pi_{\mathbf{R}}$. If* ADACT–H *is called with $\mathcal{D}$ and $\delta = \delta_0/2QAO$ in input, with probability $1 - \delta_0$, it returns the transition function of the minimal RDP equivalent to $\mathbf{R}$, provided that*

$$|\mathcal{D}| \geq N_{\delta_0} = \frac{21\log(8QAO/\delta_0)}{d_{\min}^{\mathsf{b}}\,\mu_0}\sqrt{H\log(2ARO)} = \mathcal{O}\left(\frac{\sqrt{H}\log(Q/\delta_0)}{d_{\min}^{\mathsf{b}}\,\mu_0}\right). \tag{3}$$

where the minimal occupancy distribution is $d_{\min}^{\mathsf{b}} := \min_{t\in[H], q\in\mathcal{Q}_t, ao\in\mathcal{AO}} d_t^{\mathsf{b}}(q, ao)$.

Proof. The proof consists in choosing N and δ such that the condition in Lemma 14 is true with high probability for each application of TESTDISTINCT. Consider an iteration $t \in [H]$ of ADACT–H. For a candidate state $qao \in \mathcal{Q}_{\mathsf{c},t+1}$, its associated probability is $d_t^{\mathsf{b}}(q, ao)$ with empirical estimate $\widehat{p}_t(qao) = |\mathcal{X}(qao)|/N$, i.e. the proportion of episodes in $\mathcal{D}$ that are consistent with qao. We can apply the empirical Bernstein inequality in (17) to show that

$$\mathbb{P}\left(\left|\widehat{p}_t(qao) - d_t^{\mathsf{b}}(q, ao)\right| \geq \sqrt{\frac{2\widehat{p}_t(qao)\ell}{N}} + \frac{14\ell}{3N} = \frac{\sqrt{2M\ell} + 14\ell/3}{N}\right) \leq \delta,$$

where $M = |\mathcal{X}(qao)|$, $\ell = \log(4/\delta)$, and δ is the failure probability of ADACT–H. To obtain a bound on M and N, assume that we can estimate $d_t^{\mathsf{b}}(q, ao)$ with accuracy $d_t^{\mathsf{b}}(q, ao)/2$, which yields

$$\frac{d_t^{\mathsf{b}}(q, ao)}{2} \geq \frac{\sqrt{2M\ell} + 14\ell/3}{N} \tag{19}$$

$$\widehat{p}(qao) \geq d_t^{\mathsf{b}}(q, ao) - \frac{\sqrt{2M\ell} + 14\ell/3}{N} \geq d_t^{\mathsf{b}}(q, ao) - \frac{d_t^{\mathsf{b}}(q, ao)}{2} = \frac{d_t^{\mathsf{b}}(q, ao)}{2}. \tag{20}$$

Combining these two results, we obtain

$$M = N\widehat{p}(qao) \geq N d_t^{\mathsf{b}}(q, ao)/2 \geq \frac{N}{2N}\left(\sqrt{2M\ell} + 14\ell/3\right) = \frac{1}{2}\left(\sqrt{2M\ell} + 14\ell/3\right). \tag{21}$$

Solving for M yields $M \geq 4\ell$, which is subsumed by the bound on M in Lemma 14 since $\mu_0 < 1$. Hence the bound on M in Lemma 14 is sufficient to ensure that we estimate $d_t^{\mathsf{b}}(q, ao)$ with accuracy $d_t^{\mathsf{b}}(q, ao)/2$. We can now insert the bound on M from Lemma 14 into (19) to obtain a bound on N:

$$N \geq \frac{2(\sqrt{2M\ell} + 14\ell/3)}{d_t^{\mathsf{b}}(q, ao)} \geq \frac{2\ell}{d_t^{\mathsf{b}}(q, ao)}\left(\frac{4}{\mu_0}\sqrt{\frac{(H-t)\log(2ARO)}{\ell} + 1} + \frac{14}{3}\right) \equiv N_1. \tag{22}$$

To simplify the bound, we can choose any value larger than N_1:

$$N_1 \leq \frac{2\ell}{d_t^{\mathsf{b}}(q, ao)}\left(\frac{4}{\mu_0}\sqrt{H\log(2ARO) + H\log(2ARO)} + \frac{14}{3\mu_0}\sqrt{H\log(2ARO)}\right)$$

$$< \frac{21\ell}{d_{\min}^{\mathsf{b}}\,\mu_0}\sqrt{H\log(2ARO)} \equiv N_0, \tag{23}$$

where we have used $d_t^{\mathsf{b}}(q, ao) \geq d_{\min}^{\mathsf{b}}$, $\mu_0 < 1$, $\ell = \log 4 + \log(1/\delta) \geq 1$, $H\log(2ARO) \geq \log 4 \geq 1$ and $4\sqrt{2} + 14/3 < \frac{21}{2}$. Choosing $\delta = \delta_0/2QAO$, a union bound implies that accurately estimating $d_t^{\mathsf{b}}(q, ao)$ for each candidate state qao and accurately estimating $p(e_{0:u}*)$ for each prefix in the

multiset $\mathcal{X}(qao)$ associated with qao occurs with probability $1 - 2QAO\delta = 1 - \delta_0$, since there are at most QAO candidate states. Substituting the expression for δ in N_0 yields the bound in the theorem.

It remains to show that the resulting RDP is minimal. We show the result by induction. The base case is given by the set $\mathcal{Q}_0$, which is clearly minimal since it only contains the initial state q_0. For $t \in [H]$, assume that the algorithm has learned a minimal RDP for sets $\mathcal{Q}_0, \ldots, \mathcal{Q}_t$. Let $\mathcal{Q}_{t+1}$ be the set of states at layer $t+1$ of a minimal RDP. Due to Proposition 1, each pair of histories that map to a state $q_{t+1} \in \mathcal{Q}_{t+1}$ generate the same probability distribution over suffixes. Hence by Lemma 13, with high probability $\textsc{TestDistinct}(t, \mathcal{X}(qao), \mathcal{X}(q'a'o'), \delta)$ returns false for each pair of candidate states qao and $q'a'o'$ that map to q_{t+1}. Consequently, the algorithm merges qao and $q'a'o'$. On the other hand, by assumption, each pair of histories that map to different states of $\mathcal{Q}_{t+1}$ have L^{p}_{∞}-distinguishability μ_0. Hence by Lemma 14, with high probability $\textsc{TestDistinct}(t, \mathcal{X}(qao), \mathcal{X}(q'a'o'), \delta)$ returns true for each pair of candidate states qao and $q'a'o'$ that map to different states in $\mathcal{Q}_{t+1}$. Consequently, the algorithm does not merge qao and $q'a'o'$. It follows that with high probability, ADACT–H will generate exactly the set $\mathcal{Q}_{t+1}$, which is that of a minimal RDP. □

C.3 Proof of Theorem 8

In this section we prove Theorem 8, which states an alternative upper bound on the sample complexity of ADACT–H. The proof requires an alternative definition of the algorithm, which we call ADACT–H–A (for "approximation").

Theorem 8. *Consider a dataset $\mathcal{D}$ of episodes sampled from an RDP $\mathbf{R}$ and a regular policy $\pi^{\mathsf{b}} \in \Pi_{\mathbf{R}}$. A modified version of* ADACT–H *called with $\mathcal{D}$, $\delta = \delta_1/2QAO$ and $\varepsilon \in (0, H]$, returns the transition function of an $\varepsilon/2$-approximate RDP $\mathbf{R}'$ with probability $1 - \delta_1$ if $|\mathcal{D}| \geq N_{\delta_1}$, where*

$$N_{\delta_1} = \frac{252 HQAOC^*_{\mathbf{R}} \log(16QAO/\delta_1)}{\varepsilon\, \mu_0} \sqrt{H \log(2ARO)} = \mathcal{O}\left(\frac{H^{3/2} QAOC^*_{\mathbf{R}} \log(Q/\delta_1)}{\varepsilon\, \mu_0} \right).$$

Function ADACT–H–A($\mathcal{D}$, δ, ε, $\overline{Q}$, $C^*_{\mathbf{R}}$)

Input: Dataset $\mathcal{D}$, failure probability $0 < \delta < 1$, accuracy ε, upper bound $\overline{Q}$ on $|\mathcal{Q}'|$, concentrability $C^*_{\mathbf{R}}$
Output: Set $\mathcal{Q}'$ of RDP states, transition function $\tau' : \mathcal{Q}' \times \mathcal{A}\mathcal{O} \to \mathcal{Q}'$ of an approximate RDP $\mathbf{R}'$

```
Q'_0 ← {q_0}, X(q_0) ← D                                          // initial state
Q'_0 ← Q'_0 ∪ {q^e_0}, X(q^e_0) ← ∅                               // initial side state
for t = 0, ..., H do
    Q'_{t+1} ← {q^e_{t+1}}                                        // side state
    foreach ao ∈ AO do τ'(q^e_t, ao) = q^e_{t+1}, X(q^e_{t+1}) ← {e_{t+1:H} | aroe_{t+1:H} ∈ X(q^e_t)}
    Q'_{c,t+1} ← {qao | q ∈ Q'_t, ao ∈ AO}                        // get candidate states
    foreach qao ∈ Q'_{c,t+1} do X(qao) ← {e_{t+1:H} | aroe_{t+1:H} ∈ X(q)}   // compute suffixes
    q_m a_m o_m ← arg max_{qao ∈ Q'_{c,t+1}} |X(qao)|             // most common candidate
    Q'_{t+1} ← Q'_{t+1} ∪ {q_m a_m o_m}, τ'(q_m, a_m o_m) = q_m a_m o_m   // promote candidate
    Q'_{c,t+1} ← Q'_{c,t+1} \ {q_m a_m o_m}                       // remove from candidate states
    for qao ∈ Q'_{c,t+1} such that |X(qao)|/N ≥ ε/(4Q̄AOHC*_R) do
        Similar ← {q' ∈ Q'_{t+1} | not TestDistinct(t, X(qao), X(q'), δ)}   // confidence test
        if Similar = ∅ then Q'_{t+1} ← Q'_{t+1} ∪ {qao}, τ'(q, ao) = qao   // promote candidate
        else q' ← element in Similar, τ'(q, ao) = q', X(q') ← X(q') ∪ X(qao)   // merge states
        if |Q'_0| + ··· + |Q'_{t+1}| > Q̄ then return Failure
    end
    for qao ∈ Q'_{c,t+1} such that |X(qao)|/N < ε/(4Q̄AOHC*_R) do
        τ'(q, ao) = q^e_{t+1}, X(q^e_{t+1}) ← X(q^e_{t+1}) ∪ X(qao)   // merge with side state
    end
end
return Q'_0 ∪ ··· ∪ Q'_{H+1}, τ'
```

Proof. ADACT–H–A returns the set of RDP states $\mathcal{Q}'$ and transition function τ' of an approximate RDP $\mathbf{R}'$, taking as input the accuracy ε, an upper bound $\overline{Q}$ on $|\mathcal{Q}'|$, and the concentrability $C^*_{\mathbf{R}}$.

If, at any moment, the number of RDP states $|\mathcal{Q}'|$ exceeds $\overline{Q}$, the algorithm returns Failure (line 15). ADACT–H–A defines a sequence of side states $q^{\mathsf{e}}_0, \ldots, q^{\mathsf{e}}_{H+1}$ (lines 2 and 4), and defines $\tau'(q^{\mathsf{e}}_t, ao) = q^{\mathsf{e}}_{t+1}$ for each $t \in [H]$ and $ao \in \mathcal{AO}$ (line 5). For each candidate state $qao \in \mathcal{Q}'_{\mathsf{c},t+1}$ such that $|\mathcal{X}(qao)|/N \geq \varepsilon/(4\overline{Q}AOHC^*_{\mathbf{R}})$, the definition of ADACT–H–A is the same as that of ADACT–H, including the call to TESTDISTINCT (lines 11-14). For each candidate state $qao \in \mathcal{Q}'_{\mathsf{c},t+1}$ such that $|\mathcal{X}(qao)|/N < \varepsilon/(4\overline{Q}AOHC^*_{\mathbf{R}})$, instead of mapping (q, ao) to the correct RDP state, ADACT–H–A maps (q, ao) to the side state q^{e}_{t+1} (lines 17-18). Once in q^{e}_{t+1}, $\mathbf{R}'$ remains in a side state for the rest of the episode. The side states do not satisfy Proposition 1, since the histories that map to side states may assign different probabilities to suffixes (and TESTDISTINCT is never called).

We define an alternative occupancy measure $d'_t(q, ao)$ associated with the approximate RDP $\mathbf{R}'$ and the behavior policy π^{b}. The new definition is given by $d'_0(q_0, a_0 o_0) = \theta_{\mathsf{o}}(q_0, a_0, o_0)$ and

$$d'_t(q_t, a_t o_t) = \sum_{(q,ao) \in \tau'^{-1}(q_t)} d'_{t-1}(q, ao) \cdot \pi^{\mathsf{b}}(q_t, a_t) \cdot \theta_{\mathsf{o}}(q_t, a_t, o_t), \quad t > 0.$$

The only difference between d'_t and d^{b}_t is that d'_t is defined with respect to the transition function τ' of the approximate RDP $\mathbf{R}'$, instead of the transition function τ associated with the original RDP $\mathbf{R}$. Note that apart from the side states, $\mathbf{R}'$ will contain the same states as $\mathbf{R}$, as long as the candidate states satisfy the condition on line 11, and τ' will be the same as τ on those states. Since the states and behavior policy are the same, the L^{p}_{∞}-distingishability μ_0 of $\mathbf{R}'$ will be the same as that of $\mathbf{R}$.

First consider each candidate state $qao \in \mathcal{Q}'_{\mathsf{c},t+1}$ such that $|\mathcal{X}(qao)|/N \geq \varepsilon/(4\overline{Q}AOHC^*_{\mathbf{R}})$. In this case, ADACT–H–A calls TESTDISTINCT, so Lemmas 13 and 14 apply to these candidate states. The associated occupancy is $d'_t(q, ao)$ with empirical estimate $\widehat{p}_t(qao) = |\mathcal{X}(qao)|/N$. Hence the empirical Bernstein inequality applies to $d'_t(q, ao)$ and $\widehat{p}_t(qao)$. Just as in the proof of Theorem 6, we choose $\mathcal{X}(qao)$ large enough to accurately estimate $d'_t(q, ao)$ within a factor $d'_t(q, ao)/2$ with probability $1 - \delta$. We thus obtain an alternative upper bound on $d'_t(q, ao)$ as follows:

$$d'_t(q, ao) \geq \frac{|\mathcal{X}(qao)|}{N} - \frac{d'_t(q, ao)}{2} \quad \Leftrightarrow \quad \frac{3d'_t(q, ao)}{2} \geq \frac{|\mathcal{X}(qao)|}{N} \geq \frac{\varepsilon}{4\overline{Q}AOHC^*_{\mathbf{R}}}.$$

From here, we can use the proof of Theorem 6 by substituting d'_t for d^{b}_t, up until the definition of the bound N_1 on $|\mathcal{D}|$ in (22). Inserting the bound on $d'_t(q, ao)$ into the expression for N_1 yields

$$\begin{aligned} N_1 &\leq \frac{2\ell}{d'_t(q, ao)} \left(\frac{4}{\mu_0} \sqrt{H \log(2ARO) + H \log(2ARO)} + \frac{14}{3\mu_0} \sqrt{H \log(2ARO)} \right) \\ &\leq \frac{126\overline{Q}AOHC^*_{\mathbf{R}}\ell}{\varepsilon\mu_0} \sqrt{H \log(2ARO)} \equiv N_2. \end{aligned} \tag{24}$$

Next, consider each candidate state $qao \in \mathcal{Q}'_{\mathsf{c},t+1}$ such that $|\mathcal{X}(qao)|/N < \varepsilon/(4\overline{Q}AOHC^*_{\mathbf{R}})$. In this case, we instead choose $\mathcal{X}(qao)$ large enough to estimate $d'_t(q, ao)$ with accuracy β with probability $1 - \delta$. From the empirical Bernstein inequality, estimating $d'_t(q, ao)$ with accuracy β implies

$$\beta \geq \sqrt{\frac{2\widehat{p}_t(qao)\ell}{N}} + \frac{14\ell}{3N} \quad \Leftrightarrow \quad N \geq \frac{2\ell}{\beta} \left(\frac{14}{3} + \frac{\widehat{p}_t(qao)}{\beta} \right) \equiv N_3.$$

Choosing $\beta = \varepsilon/(4\overline{Q}AOHC^*_{\mathbf{R}})$ implies $\widehat{p}_t(qao) < \beta$, and we can thus simplify N_3 as

$$N_3 = \frac{2\ell}{\beta} \left(\frac{14}{3} + \frac{\widehat{p}_t(qao)}{\beta} \right) < \frac{12\ell}{\beta} = \frac{48\overline{Q}AOHC^*_{\mathbf{R}}\ell}{\varepsilon} \equiv N_4. \tag{25}$$

In addition, this choice of β yields the following bound on $d'_t(q, ao)$:

$$d'_t(q, ao) \leq \widehat{p}_t(qao) + \beta < \frac{\varepsilon}{4\overline{Q}AOHC^*_{\mathbf{R}}} + \frac{\varepsilon}{4\overline{Q}AOHC^*_{\mathbf{R}}} = \frac{\varepsilon}{2\overline{Q}AOHC^*_{\mathbf{R}}}.$$

We prove that $\mathbf{R}'$ is an $\varepsilon/2$-approximation of the original RDP $\mathbf{R}$. We briefly overload notation by letting $d^*_t(q, ao)$ refer to the occupancy of an optimal policy π^* *with respect to the transition function* τ' *of* $\mathbf{R}'$. We also need the additional assumption $C^*_{\mathbf{R}} \geq \max_{t,q,ao} d^*_t(q, ao)/d'_t(q, ao)$, which is not implied by the concentrability of $\mathbf{R}$ (though the assumption is mild if $C^*_{\mathbf{R}}$ holds for $\mathbf{R}$).

Consider a candidate state $qao \in \mathcal{Q}'_{\mathsf{c},t+1}$ such that $|\mathcal{X}(qao)|/N < \varepsilon/(4\overline{Q}AOHC^*_{\mathbf{R}})$. The contribution to the expected optimal reward of $\mathbf{R}$ of all histories that map to qao is bounded as

$$d^*_t(q, ao)(H - t) \leq C^*_{\mathbf{R}} d'_t(q, ao)H < \frac{\varepsilon}{2\overline{Q}AO},$$

since $(H - t)$ is the maximum reward obtained during the remaining time steps. Since qao is mapped to a side state of $\mathbf{R}'$, an optimal policy for $\mathbf{R}'$ may not accurately estimate the expected optimal value for qao, but the contribution of all such candidate states to the expected optimal value is at most

$$\sum_{t\in[H-1]} \sum_{q\in\mathcal{Q}_t} \sum_{ao\in\mathcal{AO}} d^*_t(q, ao)(H - t) \leq \sum_{t\in[H-1]} \sum_{q\in\mathcal{Q}_t} \sum_{ao\in\mathcal{AO}} \frac{\varepsilon}{2\overline{Q}AO} \leq \frac{\varepsilon}{2},$$

since there can be at most $\overline{Q}AO$ such candidate states. Hence any optimal policy for $\mathbf{R}'$ is an $\varepsilon/2$-optimal policy for $\mathbf{R}$, which implies that we can approximate an ε-optimal regular policy for the exact RDP $\mathbf{R}$ by finding an $\varepsilon/2$-optimal policy for the approximate RDP $\mathbf{R}'$.

It is easy to verify that the bound N_4 in (25) is less than the bound N_2 in (24). Hence a worst-case bound is obtained by assuming that $|\mathcal{X}(qao)|/N \geq \varepsilon/(4\overline{Q}AOHC^*_{\mathbf{R}})$ for each $t \in [H]$ and each candidate state $qao \in \mathcal{Q}'_{\mathsf{c},t+1}$, which yields an upper bound N_2. Note that ADACT–H–A takes as input an upper bound $\overline{Q}$ on the number of RDP states $|\mathcal{Q}'|$ of $\mathbf{R}'$, as well as the concentrability coefficient $C^*_{\mathbf{R}}$. If the learning agent has no prior knowledge of $\overline{Q}$, it could call ADACT–H–A with the trivial upper bound $\overline{Q} = 2(AO)^H$. However, this would make the bound N_2 exponential in H, even in the case for which the actual number of states of $\mathbf{R}'$ is much smaller. A more efficient approach is to start with a small estimate of $\overline{Q}$, and in the case that ADACT–H–A returns Failure, iteratively double the estimate $\overline{Q}$ and call the algorithm again. This only increases the computational complexity of ADACT–H–A by a factor $O(\log Q)$, and the resulting upper bound $\overline{Q}$ does not exceed $2Q$. Since we already have an estimate $\overline{Q}$, in each iteration we can call ADACT–H–A with $\delta = \delta_1/(2\overline{Q}AO)$ to ensure that the bound N_2 holds for each candidate state simultaneously with probability $1 - \delta_1$. Substituting this value of δ in the bound N_2 in (24) and using $\overline{Q} < 2Q$ yields the sample complexity bound stated in the theorem. If the agent does not have prior knowledge of $C^*_{\mathbf{R}}$, any upper bound will also work, though this upper bound will appear in the sample complexity bound instead of $C^*_{\mathbf{R}}$. □

C.4 Distinguishability Parameters

Let L be any metric over $\Delta((\mathcal{ARO})^*)$, that is the space of probability distributions over traces. Then, as defined in the main body, the L-distinguishability of an RDP $\mathbf{R}$ and a policy π is the maximum μ_0 such that, for any $t \in [H]$ and $q, q' \in \mathcal{Q}_t$, the probability distributions over suffix traces $e_{t:H}$ from the two states satisfy

$$L(\mathbb{P}(e_{t:H} \mid q_t = q, \pi), \mathbb{P}(e_{t:H} \mid q_t = q', \pi)) \geq \mu_0 \tag{26}$$

In other words, it is a feature of the RDP and the policy combined that quantifies the distance between any two distinct states of the RDP with respect to the distribution over the observable quantities. Distinguishability parameters have been first introduced in Ron et al. [67] and later generalized for other metrics. They can be also found in Balle [68] for PDFA learning and in Ronca and De Giacomo [27], Ronca et al. [28] for RDP learning.

According to the definition we adopt, there exists an L-distinguishability for any RDP and policy. However, as stated in Assumption 2, we require μ_0 to be strictly positive. This does not constitute a restriction for the RDP, since it can be always minimized while preserving all conditional probabilities. Though it implies that, in any state, the behavior policy takes with positive probability all actions that are needed to observe episode suffixes that have different probability under the two states. Clearly if this was not the case for $q, q' \in \mathcal{Q}_t$ at some t, $\mathbb{P}(e_{t:H} \mid q_t = q, \pi) = \mathbb{P}(e_{t:H} \mid q_t = q', \pi)$ and no information would be available for the algorithm to distinguish them.

The metric selected also influences the actual value of the distinguishability parameter. In this paper, we adopt L^{p}_∞, as it can be seen from the TESTDISTINCT function in the two algorithms. A more standard distance would be L_∞. According to Eq. (26), an L_∞-distinguishability of μ_0 implies that for any $t \in [H], q, q' \in \mathcal{Q}_t$, $\max_{e\in\mathcal{E}_{H-t}} |\mathbb{P}(e_{t:H} = e \mid q_t = q) - \mathbb{P}(e_{t:H} = e \mid q_t = q')| \geq \mu_0$. Meaning that some trace e until the end of the episode has a different probability of being generated from the two states. Although similar, the L^{p}_∞ distance, maximizes for the full trace as well as

any of its prefixes as $\max_{u\in[H-t],e\in\mathcal{E}_u}|\mathbb{P}(e_{t:H}=e*\mid q_t=q)-\mathbb{P}(e_{t:H}=e*\mid q_t=q')|\geq\mu_0$. As it has been discussed in Balle [68], Appendix A.5, the prefix L^{p}_∞ metric always upper bounds the L_∞ metric, up to a multiplicative factor, while there are pairs of distributions in which L_∞ is exponentially smaller than L^{p}_∞ with respect to the expected suffix length. This motivates our choice. Moreover, in the specific case of our fixed horizon setting, we have that the L^{p}_∞-distinguishability is never lower than L_∞-distinguishability. Note that in the hard instance of Appendix E.2, the two coincide. The lower bound is stated in terms of the L^{p}_1-distinguishability of the RDP. While L^{p}_∞ is achieved for one specific trace prefix maximizing the difference in probability, L^{p}_1 takes all traces into account as $\sum_{u\in[H-t],e\in\mathcal{E}_u}|\mathbb{P}(e_{t:H}=e*\mid q_t=q)-\mathbb{P}(e_{t:H}=e*\mid q_t=q')|$. Due to this relation, the L^{p}_∞-distinguishability always lower bounds the L^{p}_1-distinguishability in the fixed horizon setting.

D `RegORL` with Subsampled `VI-LCB`

In this section we demonstrate the composition of our proposed algorithm with a specific Offline Reinforcement Learning algorithm for MDPs. Specifically, we adopt Subsampled `VI-LCB`, from Algorithm 3 of Li et al. [16] and report the combined sample complexity of this choice, through a simple application of Theorem 7.

First, we introduce the occupancy distribution and the single-policy conentrability coefficient for MDPs. Let $\mathbf{M}=\langle\mathcal{Q},\mathcal{A},\mathcal{R},T,R,H\rangle$ be an MDP with states $\mathcal{Q}$, horizon H, transition function $T:\mathcal{Q}\times\mathcal{A}\to\mathcal{Q}$ and reward function $R:\mathcal{Q}\times\mathcal{A}\to\Delta(\mathcal{R})$. The state-action occupancy distribution of a policy $\pi:\mathcal{Q}\to\Delta(\mathcal{A})$ in $\mathbf{M}$ at step $t\in[H]$ is $d^{\pi}_{\mathsf{m},t}(q,a)=\mathbb{P}(q_t=q,a_t=a\mid\mathbf{M})$. For our purposes, it suffices to consider a fixed initial state q_0. Finally, the MDP single-policy concentrability of a policy π^{b} is [15]:

$$C^*=\max_{t\in[H],q\in\mathcal{Q},a\in\mathcal{A}}\frac{d^{\pi^*}_{\mathsf{m},t}(q,a)}{d^{\pi^{\mathsf{b}}}_{\mathsf{m},t}(q,a)}\tag{27}$$

We can now express the sample complexity of Subsampled `VI-LCB`.

Theorem 15 (Li et al. [16])**.** *Let $\mathcal{D}$ be a dataset of N_{m} episodes, sampled from an MDP $\mathbf{M}$ with a Markov policy π^{b}. For any $\varepsilon\in(0,H]$ and $0<\delta<1/12$, with probability exceeding $1-\delta$, the policy $\widehat{\pi}$ returned by Subsampled `VI-LCB` obeys $V^*_0(q_0)-V^{\widehat{\pi}}_0(q_0)\leq\varepsilon$, as long as:*

$$N_{\mathsf{m}}\geq\frac{c_N\,H^3QC^*\log\frac{N_{\mathsf{m}}H}{\delta}}{\varepsilon^2}\tag{28}$$

for a sufficiently large constant c_N.

The analysis in Li et al. [16] of Subsampled `VI-LCB` assumes that the reward function is deterministic and known. Thus, restricting our attention to this setting, we consider any episodic RDP with history-dependent, deterministic rewards. The reward function can be regarded as known, since it may be easily extracted from the dataset resulting from the Markov transformation of Definition 2.

Corollary 16. *Let $\mathcal{D}$ be a dataset of N episodes, sampled with a regular policy $\pi^{\mathsf{b}}\in\Pi_{\mathbf{R}}$ from an RDP $\mathbf{R}$ with deterministic rewards. If Subsampled `VI-LCB` is the* OFFLINERL *algorithm in Algorithm 1, then, for any $\varepsilon\in(0,H]$ and $0<\delta<1/12$, with probability exceeding $1-\delta$, the output of `RegORL`$(\mathcal{D},\varepsilon,\delta)$ is an ε-optimal policy of $\mathbf{R}$, as long as*

$$N\geq 2\max\Big\{\frac{14\log(16QAO/\delta)}{d^{\mathsf{b}}_{\min}\,\mu_0}\sqrt{H\log(2ARO)},\ \frac{c\,H^3QC^*_{\mathbf{R}}\log\frac{2NH}{\delta}}{\varepsilon^2}\Big\}\tag{29}$$

for a sufficiently large constant c.

Proof. This corollary follows as a direct application of Theorem 15 to Theorem 6. It only remains to verify that the single-policy concentrability of the MDP underlying the dataset $\mathcal{D}'$ that Subsampled `VI-LCB` receives is $C^*_{\mathbf{R}}$. The dataset $\mathcal{D}'$ is generated according to the Markov transformation $\bar{\tau}$ from Definition 2. We only consider the cases in which ADACT–H succeeds. Let $\pi\in\Pi_{\mathbf{R}}$ be any regular policy and q_t,q'_t the states reached at step t by $\mathbf{R}$ and $\mathbf{M}_{\mathbf{R}}$, respectively. Then for $t>0$,

$$d^{\pi}_t(q,a)\coloneqq\mathbb{P}(q_t=q\mid\mathbf{R},\pi)\,\pi_{\mathsf{r}}(q,a)\tag{30}$$

$$=\mathbb{P}(\bar{\tau}(h_{t-1})=q\mid\mathbf{R},\pi)\,\pi_{\mathsf{r}}(q,a)\tag{31}$$

$$= \mathbb{P}(q'_t = q \mid \mathbf{M}_{\mathbf{R}}, \pi_{\mathsf{r}})\, \pi_{\mathsf{r}}(q, a) \tag{32}$$
$$= d^{\pi_{\mathsf{r}}}_{\mathsf{m},t}(q, a) \tag{33}$$

This is valid for any regular policy, and for the optimal and behavior policies in particular. Then,

$$C^*_{\mathbf{R}} = \max_{t \in [H], q \in \mathcal{Q}_t, ao \in \mathcal{A}\mathcal{O}} \frac{d^*_t(q, ao)}{d^{\mathsf{b}}_t(q, ao)} \tag{34}$$
$$= \max_{t \in [H], q \in \mathcal{Q}_t, ao \in \mathcal{A}\mathcal{O}} \frac{d^{\pi^*}_t(q, a)\, \theta_{\mathsf{o}}(q, a, o)}{d^{\pi^{\mathsf{b}}}_t(q, a)\, \theta_{\mathsf{o}}(q, a, o)} \tag{35}$$
$$= \max_{t \in [H], q \in \mathcal{Q}, a \in \mathcal{A}} \frac{d^{\pi^*_{\mathsf{r}}}_{\mathsf{m},t}(q, a)}{d^{\pi^{\mathsf{b}}_{\mathsf{r}}}_{\mathsf{m},t}(q, a)} \tag{36}$$
$$= C^* \tag{37}$$

□

Similarly to the previous corollary, it is also possible to combine Theorem 15 with Theorem 8. In this case, the sample complexity of Subsampled `VI-LCB` for learning an $\varepsilon/2$-accurate policy with probability $1 - \delta/2$ would be combined with $N_{\delta_1/2}$ of Theorem 8.

E Sample Complexity Lower Bound: Proof of Theorem 9

In this section, we prove the sample complexity lower bound in Theorem 9. The proof is based on a suitable composition of a two-armed bandit and an instance of the noisy parity learning problem. We first describe this latter problem and its sample-complexity lower bound in Appendix E.1. Then, we compose a hard class of RDP instances in Appendix E.2, and prove the final statement in Appendix E.3.

E.1 Learning parity with noise

Let $\mathbb{B} = \{0, 1\}$ and $L \in \mathbb{N}$. For any string $x \in \mathbb{B}^L$, the parity function $f_x : \mathbb{B}^L \to \mathbb{B}$ is $f_x(y) = \oplus_{i \in [L-1]} x_i y_i$, where $\oplus$ is addition modulo 2. For noise parameter $\xi \in (0, 0.5)$, a noisy parity function $f_{x,\xi}$ returns $f_x(y)$ with probability $0.5 + \xi$ and $1 - f_x(y)$ otherwise. Consider the class of parity functions $\mathbb{F}(L) = \{f_x\}_{x \in \mathbb{B}^L}$ and the class of noisy parity functions $\mathbb{F}(L, \xi) = \{f_{x,\xi}\}_{x \in \mathbb{B}^L}$. Assume that $x, y_1, y_2, \ldots \sim \mathrm{unif}(\mathbb{B}^L)$ are uniformly sampled. The success probability of a streaming algorithm $\mathfrak{A}$ for $\mathbb{F}(L, \xi)$ is the probability that $\mathfrak{A}$ recovers x, given in input a sequence of observations $(y_i, f_{x,\xi}(y_i))_i$.

Lemma 17. *Any streaming algorithm for $\mathbb{F}(L, \xi)$ with a success probability higher than $O(2^{-L})$ requires at least $\Omega(L/\xi)$ or $2^{\Omega(L)}$ input samples $(y_i, f_{x,\xi}(y_i))_i$.*

Proof. Learning in $\mathbb{F}(L, \xi)$ is the problem of recovering $x \in 2^{\mathbb{B}}$ from noisy data (y_i, b_i), where $b_i = f_x(y_i)$ with probability $0.5 + \xi$, and $b_i = 1 - f_x(y_i)$ otherwise. This is the problem of learning in $\mathbb{F}(L)$ with corruption rate $0.5 - \xi$. Hence, we focus on the problem of learning noiseless parity first.

The Statistical Query dimension $\mathrm{SQ\textsc{dim}}(\mathcal{C}, d)$, characterizes the complexity of learning in the class $\mathcal{C}$ with respect to the prior distribution $d \in \Delta(\mathcal{C})$. As defined in [69], $\mathrm{SQ\textsc{dim}}(\mathcal{C}, d)$ is the maximum $n \in \mathbb{N}$ such that there exist distinct $f_1, \ldots, f_n \in \mathcal{C}$, such that their pairwise correlations with respect to d are between $-1/n$ and $1/n$. For the class of parity functions, under the uniform distribution over x, $\mathrm{SQ\textsc{dim}}(\mathbb{F}(L), \mathrm{unif}) = 2^L$. This was already observed in [70], for a slightly different notion of SQ dimension. However, to verify this, we can consider a natural ordering over binary strings in $\mathcal{X}$, and represent the problem of learning $\mathbb{F}(L)$ as a matrix $M = (m_{ij}) \in \{1, -1\}^{2^L \times 2^L}$, defined as $m_{ij} = (-1)^{f_{x_j}(y_i)} = (-1)^{y_i \cdot x_j}$, where scalar product is modulo 2. It is easy to verify that M is a Hadamard matrix. Then, since every row is orthogonal to the others, and the same is true for columns, every couple of parity functions are uncorrelated under the uniform distribution over x.

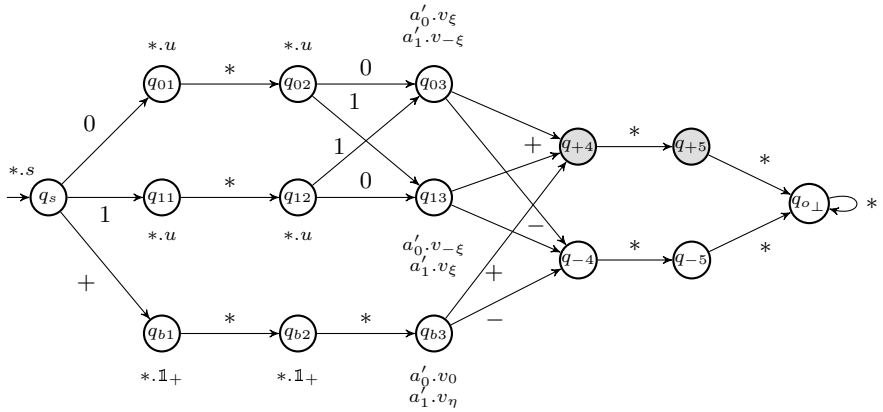

Figure 3: One episodic RDP instance $\mathbf{R}_{101,1} \in \mathbb{R}(3, 5, \xi, \eta)$, associated to the parity function f_{101} and optimal arm a'_1. The transition function is represented by the arcs, labelled by observations (transitions do not depend on actions). The star denotes any symbol. If the label of a state q is $a.d$, then the observation function is $\theta_{\mathsf{o}}(q, a) = d$ (some irrelevant labels are omitted).

Regarding the noisy parity problem, since $\text{SQDIM}(\mathbb{F}(L), \text{unif}) = 2^L$, we can apply Corollary 8 of [71] with $m = 2^L$, to have that the matrix M corresponding to the parity problem is a (k, l)-L_2-extractor with error 2^{-r}, for $k, l, r \in \Omega(L)$. Since M is a suitable extractor, we can apply Theorem 1 of [72], which considers the problem of learning M with the additional noise parameter ξ. We obtain that, in the streaming setting, any branching program B for $\mathbb{F}(L, \xi)$ whose depth is at most $2^{f_1(k,l,r)}$ and width is at most $2^{ckl/\xi}$ has a success probability of at most $O(2^{-f_1(k,l,r)})$, where c is a suitable constant and f_1 is equation (1) of [72].

Then, if the success probability is not in $O(2^{-f_1(k,l,r)})$, meaning it is higher, we have that the depth of $\mathfrak{A}$ exceeds $2^{f_1(k,l,r)}$ or the width of $\mathfrak{A}$ exceeds $2^{ckl/\xi}$. Since $k, l, r \in \Omega(L)$, then, if the success probability is not in $O(2^{-L})$, the depth of $\mathfrak{A}$ is $2^{\Omega(L)}$ or the width of $\mathfrak{A}$ is $2^{\Omega(L^2)/\xi}$. Width and depth refer to the computational model that represents $\mathfrak{A}$ as a branching program. A branching program is a directed acyclic graph in which internal nodes have one outgoing edge for each possible input sample, that is $|\mathbb{B}^L \times \mathbb{B}| = 2^{L+1}$ in our problem, and leaves correspond to algorithm decisions. From the required width and depth we know that $\mathfrak{A}$ has a leaf in layer $2^{\Omega(L)}$ or in a layer that contains $2^{\Omega(L^2)/\xi}$ nodes. The former case implies a worst case sample complexity requirement that is exponential in L. For the latter, we observe that in order to reach that width, at least $\log_{2^{L+1}} 2^{\Omega(L^2/\xi)}$ transitions and input samples, are required. This is $\Omega(L/\xi)$. □

E.2 Class of hard RDP instances

For our main lower bound, we define a class of hard RDP instances. Figure 3 shows one possible instance in this class. We will soon define it formally, but we can observe that its structure is organized in two main paths. The two branches in the top part encode a parity computation according to some hidden code $x \in \mathbb{B}^L$, so that behaving optimally in that region requires to solve a parity problem (the one of Lemma 17). The bottom part reaches a two-armed bandit whose optimal action is c. The right-most states are winning or losing states that provide a positive and null reward accordingly.

Formally, we define a class of hard RDP instances as $\mathbb{R}(L, H, \xi, \eta) = \{\mathbf{R}_{x,c}\}_{x \in \mathbb{B}^L, c \in \{0,1\}}$ where $\mathbf{R}_{x,c} = \langle \mathcal{Q}, \mathcal{AO}, \Omega, \tau, \theta, q_s, H \rangle$, for $\mathcal{Q} = \{q_s, q_{o_\perp}\} \cup \{q_{0i}, q_{1i}, q_{bi}\}_{i=1,\dots,L} \cup \{q_{+,i}, q_{-,i}\}_{i=L+1,\dots,H}$, $\mathcal{A} = \{a'_0, a'_1\}$, $\mathcal{O} = \{0, 1, +, -\}$. Assume $L \geq 1$ and $H > L$. Rewards are zero everywhere, except in the winning states

$$\theta_{\mathsf{r}}(q, a, r) = \mathbb{1}_1 \text{ if } q = q_{+i} \text{ with } i > L, \mathbb{1}_0, \text{ otherwise} \tag{38}$$

where we recall that $\mathbb{1}_x$ represents the deterministic distribution on x. For observation probabilities, we denote the distributions $u(o) \coloneqq \text{unif}\,\{0,1\}$ and

$$v_\alpha(o) \coloneqq \begin{cases} \frac{1+\alpha}{2} & \text{if } o = + \\ \frac{1-\alpha}{2} & \text{if } o = - \\ 0 & \text{otherwise} \end{cases} \qquad s(o) \coloneqq \begin{cases} 1/4 & \text{if } o = 0 \\ 1/4 & \text{if } o = 1 \\ 1/2 & \text{if } o = + \end{cases} \tag{39}$$

Now define observations as

$$\theta_{\mathsf{o}}(q,a,o) = \begin{cases} s(o) & \text{if } q = q_s \\ u(o) & \text{if } q \in \{q_{0i}, q_{1i}\}_{i=1,\dots,L-1} \\ v_\xi(o) & \text{if } q = q_{0L} \wedge a = a'_0 \text{ or } q = q_{1L} \wedge a = a'_1 \\ v_{-\xi}(o) & \text{if } q = q_{0L} \wedge a = a'_1 \text{ or } q = q_{0L} \wedge a = a'_1 \\ \mathbb{1}_+(o) & \text{if } q = q_{bi} \text{ with } i < L \\ v_0(o) & \text{if } q = q_{bL} \wedge a = a'_0 \\ v_\eta(o) & \text{if } q = q_{bL} \wedge a = a'_1 \wedge c = 1 \\ v_{-\eta}(o) & \text{if } q = q_{bL} \wedge a = a'_1 \wedge c = 0 \\ \mathbb{1}_{o_\perp}(o) & \text{if } q = q_{o_\perp} \end{cases} \tag{40}$$

Finally, the transition function is defined such that $\bar{\tau}(q_s, h_{L-1}) = q_{iL}$ with $i = f_x(o_{0:L-1})$, and

$$\tau(q_{iL}, a+) = q_{+,L+1} \qquad \tau(q_{iL}, a-) = q_{-,L+1} \tag{41}$$

$$\tau(q_{+i}, ao) = q_{+,i+1} \qquad \tau(q_{-i}, ao) = q_{-,i+1} \tag{42}$$

$$\tau(q_s, a+) = q_{b1} \qquad \tau(q_{bi}, ao) = q_{b,i+1} \qquad \text{for } i < L \tag{43}$$

$$\tau(q_{bL}, a+) = q_{+,L+1} \qquad \tau(q_{bL}, a-) = q_{-,L+1} \tag{44}$$

$$\tau(q_{+H}, ao) = q_{o_\perp} \qquad \tau(q_{-H}, ao) = q_{o_\perp} \qquad \tau(q_{o_\perp}, a, o) = q_{o_\perp} \tag{45}$$

E.3 Proof of Theorem 9

Theorem 9. *For any $(C^*_{\mathbf{R}}, H, \varepsilon, \mu_0)$ satisfying $C^*_{\mathbf{R}} \geq 2$, $H \geq 2$ and $\varepsilon \leq \mu_0/32$, there exists an RDP with horizon H, L^{p}_1-distinguishability μ_0 and $Q < 4H$ states, and a regular behavior policy π^{b} with RDP single-policy concentrability $C^*_{\mathbf{R}}$, such that for $\mathcal{D}$ generated using π^{b} and $\mathbf{R}$, if*

$$|\mathcal{D}| \notin \Omega\Big(\frac{H}{\mu_0} + \frac{C^*_{\mathbf{R}} H^2}{\varepsilon^2}\Big) \tag{4}$$

then $\mathbb{P}(V^*_0 - V^{\widehat{\pi}}_0 > \varepsilon) \geq 1/4$ for any algorithm $\mathfrak{A} : \mathcal{D} \mapsto \widehat{\pi}$.

Proof. Denote with π^{b} a regular policy in $\mathbf{R}$ and $\mathcal{D} \in \mathbb{D}$ a dataset of episodes of length H, collected from $\mathbf{R}$ and the behavior policy π^{b}. For an RDP $\mathbf{R}$, let $\Pi_{\mathsf{d}} = \mathcal{A}^{\mathcal{H}}$ be the set of deterministic non-Markov policies and $\mathfrak{A} = \mathbb{D} \to \Pi_{\mathsf{d}}$ an offline RL algorithm. For some $\delta < 0.5$, we say that an algorithm $\mathfrak{A}$ is (ε, δ)-PAC for the class of RDPs $\mathbb{R}$ under φ, if, for every $\mathbf{R} \in \mathbb{R}$ and $\mathcal{D} \in \mathbb{D}$, if the condition $\varphi(\mathcal{D}, \pi^{\mathsf{b}})$ is verified, then the output policy $\mathfrak{A}(\mathcal{D})$ is ε-optimal in $\mathbf{R}$, with probability $1 - \delta$. One notable case is that of φ requiring a necessary dataset size.

Since the output of a generic algorithm might be a generic non-Markov deterministic policy, we cannot restrict our attention to regular policies. We expand the value of a policy $\pi : \mathcal{H} \to \mathcal{A}$ in a RDP $\mathbf{R}_{x,c} \in \mathbb{R}(L, H, \xi, \eta)$ as follows:

$$\begin{aligned} V^\pi &= \mathbb{E}\left[\sum_{i=1}^{H} r_i \mid \pi\right] && (46) \\ &= (H-L)\,\mathbb{P}(q_{L+1} = q_{+,L+1} \mid \pi) && (47) \\ &= (H-L) \sum_{q \in \mathcal{Q}_L} \mathbb{P}(q_L = q \mid \pi)\,\mathbb{P}(q_{L+1} = q_{+,L+1} \mid q_L = q, \pi) && (48) \\ &= (H-L)\,(\mathbb{P}(q_L = q_{0L} \mid \pi)\,\mathbb{P}(q_{L+1} = q_{+,L+1} \mid q_L = q_{0L}, \pi) \\ &\qquad + \mathbb{P}(q_L = q_{1L} \mid \pi)\,\mathbb{P}(q_{L+1} = q_{+,L+1} \mid q_L = q_{1L}, \pi)) \end{aligned}$$

$$
\begin{aligned}
&+ (H-L)\,(\mathbb{P}(q_L = q_{bL} \mid \pi)\,\mathbb{P}(q_{L+1} = q_{+,L+1} \mid q_L = q_{bL}, \pi)) && (49)\\
&= \frac{H-L}{2}\,(\mathbb{P}(q_L = q_{0L} \mid o_0 \in \{0,1\}, \pi)\,\mathbb{P}(q_{L+1} = q_{+,L+1} \mid q_L = q_{0L}, \pi)\\
&\qquad + \mathbb{P}(q_L = q_{1L} \mid o_0 \in \{0,1\}, \pi)\,\mathbb{P}(q_{L+1} = q_{+,L+1} \mid q_L = q_{1L}, \pi))\\
&\quad + \frac{H-L}{2}\,\mathbb{P}(q_{L+1} = q_{+,L+1} \mid q_L = q_{bL}, \pi) && (50)\\
&= \frac{H-L}{4}\,(\mathbb{P}(q_{L+1} = q_{+,L+1} \mid q_L = q_{0L}, \pi) + \mathbb{P}(q_{L+1} = q_{+,L+1} \mid q_L = q_{1L}, \pi))\\
&\quad + \frac{H-L}{2}\,\mathbb{P}(q_{L+1} = q_{+,L+1} \mid q_L = q_{bL}, \pi) && (51)\\
&= \frac{H-L}{4}\,(\mathbb{P}(a_L = a'_0 \mid q_L = q_{0L}, \pi)\,\mathbb{P}(o_L = + \mid q_L = q_{0L}, a_L = a'_0)\\
&\qquad + (1 - \mathbb{P}(a_L = a'_0 \mid q_L = q_{0L}, \pi))\,\mathbb{P}(o_L = + \mid q_L = q_{0L}, a_L = a'_1)\\
&\qquad + (1 - \mathbb{P}(a_L = a'_1 \mid q_L = q_{1L}, \pi))\,\mathbb{P}(o_L = + \mid q_L = q_{1L}, a_L = a'_0)\\
&\qquad + \mathbb{P}(a_L = a'_1 \mid q_L = q_{1L}, \pi)\,\mathbb{P}(o_L = + \mid q_L = q_{1L}, a_L = a'_1))\\
&\quad + \frac{H-L}{2}\,(\mathbb{P}(a_L = a'_0 \mid q_L = q_{bL}, \pi)\,\mathbb{P}(o_L = + \mid q_L = q_{bL}, a_L = a'_0)\\
&\qquad + \mathbb{P}(a_L = a'_1 \mid q_L = q_{bL}, \pi)\,\mathbb{P}(o_L = + \mid q_L = q_{bL}, a_L = a'_1)) && (52)
\end{aligned}
$$

where in Eq. (51) we have used the uniform probability over x. For any history-dependent deterministic policy π in episodic RDPs, it is possible to identify an associated regular stochastic policy $\pi_{\mathsf{r}} : \mathcal{Q}' \to \Delta(\mathcal{A})$, where $\mathcal{Q}' \coloneqq \mathcal{Q} \setminus \{q_{o_\perp}\}$ and:

$$
\begin{aligned}
\pi_{\mathsf{r}}(q, a) &\coloneqq \mathbb{P}(\pi(h) = a \mid \bar{\tau}(h) = q) && (53)\\
&= \sum_{h' \in \bar{\tau}^{-1}(q)} \mathbb{I}(\pi(h') = a)\,\frac{\mathbb{P}(h = h' \mid \pi)}{\mathbb{P}(q \mid \pi)} && (54)
\end{aligned}
$$

In other words, π_{r} encodes the probability that π takes action a, given that some history has led to state q. With this convention,

$$
\begin{aligned}
V^\pi &= \frac{H-L}{4}\,(\pi_{\mathsf{r}}(q_{0L}, a'_0)\,v_\xi(+) + (1 - \pi_{\mathsf{r}}(q_{0L}, a'_0))\,v_\xi(-)\\
&\qquad + (1 - \pi_{\mathsf{r}}(q_{1L}, a'_1))\,v_\xi(-) + \pi_{\mathsf{r}}(q_{1L}, a'_1)\,v_\xi(+))\\
&\quad + \frac{H-L}{2}\,(\pi_{\mathsf{r}}(q_{bL}, a'_0)\,u(+) + \pi_{\mathsf{r}}(q_{bL}, a'_1)\,(\mathbb{I}(c = a'_1)\,v_\eta(+) + \mathbb{I}(c = a'_0)\,v_\eta(-)) && (55)\\
&= \frac{H-L}{8}\,(\pi_{\mathsf{r}}(q_{0L}, a'_0)\,(1+\xi) + (1 - \pi_{\mathsf{r}}(q_{0L}, a'_0))\,(1-\xi)\\
&\qquad + (1 - \pi_{\mathsf{r}}(q_{1L}, a'_1))\,(1-\xi) + \pi_{\mathsf{r}}(q_{1L}, a'_1)\,(1+\xi))\\
&\quad + \frac{H-L}{4}\,(\pi_{\mathsf{r}}(q_{bL}, a'_0) + \pi_{\mathsf{r}}(q_{bL}, a'_1)\,(\mathbb{I}(c = a'_1)\,(1+\eta) + \mathbb{I}(c = a'_0)\,(1-\eta))) && (56)\\
&= \frac{H-L}{4}\,(1 - \xi + \xi\,\pi_{\mathsf{r}}(q_{0L}, a'_0) + \xi\,\pi_{\mathsf{r}}(q_{1L}, a'_1)\\
&\qquad + \pi_{\mathsf{r}}(q_{bL}, a'_0) + \pi_{\mathsf{r}}(q_{bL}, a'_1)\,(1 + \eta\,\mathbb{I}(c = a'_1) - \eta\,\mathbb{I}(c = a'_0))) && (57)
\end{aligned}
$$

For the optimal policy in particular, this becomes:

$$
V^* = \frac{H-L}{4}\,(1 + \xi + \mathbb{I}(c = a'_0) + (1+\eta)\,\mathbb{I}(c = a'_1)) \tag{58}
$$

From the ε-optimality of $\pi = \mathfrak{A}(\mathcal{D})$, then,

$$
\begin{aligned}
\varepsilon &\geq V^* - V^\pi && (59)\\
&= \frac{H-L}{4}(2\xi - \xi\,\pi_{\mathsf{r}}(q_{0L}, a'_0) - \xi\,\pi_{\mathsf{r}}(q_{1L}, a'_1)\\
&\qquad + \eta\,\mathbb{I}(c = a'_1)\,(1 - \pi_{\mathsf{r}}(q_{bL}, a'_1)) + \eta\,\mathbb{I}(c = a'_0)\,\pi_{\mathsf{r}}(q_{bL}, a'_1)) && (60)
\end{aligned}
$$

$$= \frac{H-L}{4}(\xi\,(2-\pi_{\mathsf{r}}(q_{0L},a_0')-\pi_{\mathsf{r}}(q_{1L},a_1'))+\eta\,(1-\pi_{\mathsf{r}}(q_{bL},c))) \tag{61}$$

$$\geq \frac{H-L}{4}\max\{\xi\,(1-\pi_{\mathsf{r}}(q_{0L},a_0')),\xi\,(1-\pi_{\mathsf{r}}(q_{1L},a_1')),\eta\,(1-\pi_{\mathsf{r}}(q_{bL},c))\} \tag{62}$$

Now, assume that

$$\min\{\xi,\eta\}\geq\frac{16\,\varepsilon}{H-L} \tag{63}$$

Then, all of the following is true: $\pi_{\mathsf{r}}(q_{0L},a_0')\geq 3/4$, $\pi_{\mathsf{r}}(q_{1L},a_1')\geq 3/4$, $\pi_{\mathsf{r}}(q_{bL},c)\geq 3/4$. This means that, for small ε, any ε-optimal policy must frequently select the optimal action for both the parity problem and the bandit. Let us represent the first two events with B_{p} and the third with B_{b}. Since $\mathfrak{A}$ is (ε,δ)-PAC for $\mathbb{R}(L,H,\xi,\eta)$ under φ, the probability of $B_{\mathsf{p}}\wedge B_{\mathsf{b}}$ is at least $1-\delta$, for any $\mathcal{D}$ and π^{b} satisfying $\varphi(\mathcal{D},\pi^{\mathsf{b}})$.

We proceed to compute the necessary data to satisfy both events with high probability. The dataset $\mathcal{D}$ can be partitioned in two subsets $\mathcal{D}_{\mathsf{p}}$ and $\mathcal{D}_{\mathsf{b}}$, containing any episode from $\mathcal{D}$ whose initial observation is $\{0,1\}$ and +, respectively. The two datasets share no information and $\mathcal{D}_{\mathsf{p}}$ and $\mathcal{D}_{\mathsf{b}}$ are mutually independent. To see this, we observe that the sequence $a_{L+1}r_{L+1}o_{L+1}\ldots o_H$ is independent of $a_0r_0o_0\ldots a_L$ given o_L, since $+$ or $-$ determines at step L determines the rest of the episode. Also, for any two episodes e_H,e_H', the sequence $a_1r_1o_1\ldots o_L$ is independent of $a_1'r_1'o_1'\ldots o_L'$ given o_0. Since, $o_0\sim s$, that is the starting distribution, the two datasets are independent. Let $\mathcal{Q}_{\mathsf{p}}=\{q_s,q_{o_\perp}\}\cup\{q_{0i},q_{1i}\}_{i=1,\ldots,L}\cup\{q_{+,i},q_{-,i}\}_{i=L+1,\ldots,H}$ and $\mathcal{Q}_{\mathsf{b}}=\{q_s,q_{o_\perp}\}\cup\{q_{bi}\}_{i=1,\ldots,L}\cup\{q_{+,i},q_{-,i}\}_{i=L+1,\ldots,H}$ be the reachable states in the two datasets. Then, we consider two separate classes $\mathbb{R}(L,H,\xi)$ and $\mathbb{R}(L,H,\eta)$ as the sets of RDPs in $\mathbb{R}(L,H,\xi,\eta)$, restricted to $\mathcal{Q}_{\mathsf{p}}$ and $\mathcal{Q}_{\mathsf{b}}$, respectively. To do so we construct $\mathbf{R}_r\in\mathbb{R}(L,H,\xi)$ and $\mathbf{R}_c\in\mathbb{R}(L,H,\eta)$ such that the initial observation follows $\mathrm{unif}(\{0,1\})$ in $\mathbf{R}_r$ and $\mathbb{1}_+$ in $\mathbf{R}_c$. Now, from the independence of the two datasets and the fact that $\mathfrak{A}$ is (ε,δ)-PAC in $\mathcal{D}$, there must exists an algorithm $\mathfrak{A}_{\mathsf{p}}:\mathcal{D}_{\mathsf{p}}\mapsto\pi_{\mathsf{p}}$ that is $(2\varepsilon,\delta)$-PAC in $\mathbb{R}(L,H,\xi)$ under some φ_{p}, and $\mathfrak{A}_{\mathsf{b}}:\mathcal{D}_{\mathsf{b}}\mapsto\pi_{\mathsf{b}}$ that is $(2\varepsilon,\delta)$-PAC in $\mathbb{R}(L,H,\eta)$ under some φ_{b}. If this was not the case, $B_{\mathsf{p}}\wedge B_{\mathsf{b}}$ could not be verified in one of the two terms.

We analyze $\mathfrak{A}_{\mathsf{p}}$ first and we show that its requirement φ_{p} is $|\mathcal{D}_{\mathsf{p}}|\in\Omega(L/\xi)\cup 2^{\Omega(L)}$. For a contradiction, assume this is not the case and that $|\mathcal{D}_{\mathsf{p}}|=g(L,\xi)\notin\Omega(L/\xi)\cup 2^{\Omega(L)}$ is allowed. Then, we can use $\mathfrak{A}_{\mathsf{p}}$ to solve the noisy parity problem under the streaming setting with $g(L,\xi)$ samples (this setting has been introduced in Appendix E.1). We proceed as follows. Consider any noisy parity function $f_{x,\xi}$ with unknown x. Sample a sequence of strings $y_i\in 2^L$ from the uniform distribution and collect $g(L,\xi)$ pairs (y_i,p_i), sampling $p_i\sim f_{x,\xi}(y_i)$. Then, for $H>L$, compose a dataset of episodes $\{e_i\}_i$. All actions of e_i are selected uniformly in $\{a_0',a_1'\}$. The observations $o_{0:L-1}$ are y_i and o_L equals p_i if $a_L=a_0'$, $1-p_i$, otherwise (0 and 1 take roles of $+$ and $-$ symbols here). Rewards $r_{L+1:H}$ are equal to one if $o_L=1$, null otherwise. We obtain that dataset so constructed is equally likely under this procedure than under the uniform policy and the RDP $\mathbf{R}_x\in\mathbb{R}(L,H,\xi)$. Since $\mathfrak{A}_{\mathsf{p}}$ is $(2\varepsilon,\delta)$-PAC for $\mathbb{R}(L,H,\xi)$, with probability $1-\delta$, the output policy π_{p} satisfies:

$$\min\{\pi_{\mathsf{pr}}(q_{0L},a_0'),\pi_{\mathsf{pr}}(q_{1L},a_1')\}\geq 3/4 \tag{64}$$

where π_{pr} is the stochastic regular policy for π_{p}. This can be seen by our assumption in Eq. (63) and doubling both ε and the sub-optimality gap of Eq. (62), due to the updated probability for the initial observation. Then, for any sequence $y\in 2^L$ and associated history h_{L-1} with $o_{0:L-1}=y$,

$$f_x(y)=\arg\max_{i=0,1}\pi_{\mathsf{p}}(h_{L-1},a_i') \tag{65}$$

which is the noiseless parity function based on x. This means that it is possible to reconstruct x solely by interacting with π_{p}, without collecting further samples. The solution we have described is a streaming algorithm with sample complexity $g(L,\xi)$. Since this contradicts Lemma 17, we have proven $|\mathcal{D}_{\mathsf{p}}|\in\Omega(L/\xi)\cup 2^{\Omega(L)}$.

We now consider the bandit problem, which is solved by $\mathfrak{A}_{\mathsf{b}}$. Similarly to the previous case, from the ε-optimality of $\mathfrak{A}_{\mathsf{b}}(\mathcal{D}_{\mathsf{b}})$, we obtain the necessary condition: $\pi_{\mathsf{br}}(q_{bL},c)\geq 3/4$ from Eq. (62). This condition is expressed for the stochastic policy π_{br}, However, we notice that for q_{bL} in particular, the only possible history is $h_{L-1}=a_0+a_1\ldots+$, where all actions must also be deterministic. Then,

$$\pi_{\mathsf{br}}(q_{bL},c)=\mathbb{P}(\pi_{\mathsf{b}}(h)=c\mid\bar{\tau}(h)=q_{bL})=\mathbb{I}(\pi_{\mathsf{b}}(h_{L-1})=c) \tag{66}$$

implying that π_{br} can only be deterministic for q_{bL}. This means that $\mathfrak{A}_{\mathsf{b}}$ must solve best-arm identification in the two arm bandit at q_{bL}. We can compose a simplified dataset that is relevant for the bandit as:

$$\mathcal{D}'_{\mathsf{b}} = \{a_L o_L : e_H \in \mathcal{D}_{\mathsf{b}}\} \tag{67}$$

Since $\mathcal{D}_{\mathsf{b}}$ can be deterministically reconstructed from $\mathcal{D}'_{\mathsf{b}}$, we have the following conditional independence: $\pi_{\mathsf{b}} \perp c \mid \mathcal{D}'_{\mathsf{b}}$, where $c \in \{a'_0, a'_1\}$ is the optimal arm, and $\pi_{\mathsf{b}} = \mathfrak{A}_{\mathsf{b}}(\mathcal{D}_{\mathsf{b}})$ is the output of the algorithm. Denoting with $\hat{c} = \pi_{\mathsf{b}}(h_{L-1})$ the selected arm, the error probability is $P_e \coloneqq \mathbb{P}(\hat{c} \neq c)$. Applying Fano's inequality from Theorem 12 to the variables $c \to \mathcal{D}'_{\mathsf{b}} \to \hat{c}$ gives:

$$H_2(P_e) \geq H(c \mid \mathcal{D}'_{\mathsf{b}}) \tag{68}$$

$$= H(c) - I(c; \mathcal{D}'_{\mathsf{b}}) = \log 2 - I(c; \mathcal{D}'_{\mathsf{b}}) \tag{69}$$

where we have used the fact that $\hat{c}$ is a Bernoulli variable and the uniform prior over c. Now, assuming $C \geq 2$, we construct the following behavior policy: $\pi^{\mathsf{b}}(q_{bL}, a_0) = 1 - 1/C$ and $\pi^{\mathsf{b}}(q_{bL}, a_1) = 1/C$. In the following, we write $N_{\mathsf{b}} \coloneqq |\mathcal{D}_{\mathsf{b}}|$ and omit the implicit dependency on π^{b}.

$$I(c\,;\,\mathcal{D}'_{\mathsf{b}}) = H(\mathcal{D}'_{\mathsf{b}}) - H(\mathcal{D}'_{\mathsf{b}} \mid c) \tag{70}$$

$$= N_{\mathsf{b}}(H(a_L o_L) - H(a_L o_L \mid c)) \tag{71}$$

$$= N_{\mathsf{b}} D_{\mathrm{KL}}(\mathbb{P}(a_L o_L, c) \parallel \mathbb{P}(a_L o_L)\,\mathbb{P}(c)) \tag{72}$$

$$= \frac{N_{\mathsf{b}}}{2} \sum_{a,c' \in \mathcal{A}, o \in \mathcal{O}} \mathbb{P}(a, o \mid c')\, \log \frac{\mathbb{P}(a, o \mid c')}{\mathbb{P}(a, o)} \tag{73}$$

$$= \frac{N_{\mathsf{b}}}{2} \sum_{a,c' \in \mathcal{A}, o \in \mathcal{O}} \mathbb{P}(a, o \mid c')\, \log \frac{\mathbb{P}(a \mid c')\,\mathbb{P}(o \mid c', a)}{\sum_{c''} \mathbb{P}(a \mid c'')\,\mathbb{P}(o \mid c'', a)/2} \tag{74}$$

$$= \frac{N_{\mathsf{b}}}{2} \sum_{a,c' \in \mathcal{A}, o \in \mathcal{O}} \mathbb{P}(a, o \mid c')\, \log \frac{2\mathbb{P}(o \mid c', a)}{\sum_{c''} \mathbb{P}(o \mid c'', a)} \tag{75}$$

$$= \frac{N_{\mathsf{b}}}{2} \sum_{a,c' \in \mathcal{A}, o \in \mathcal{O}} \mathbb{P}(a, o \mid c')\, \log(2\mathbb{P}(o \mid c', a)) \tag{76}$$

$$= \frac{N_{\mathsf{b}}}{2} \sum_{c' \in \mathcal{A}, o \in \mathcal{O}} \mathbb{P}(a'_1, o \mid c')\, \log(2\mathbb{P}(o \mid c', a'_1)) \tag{77}$$

$$= \frac{N_{\mathsf{b}}}{2} \sum_{o \in \mathcal{O}} (\mathbb{P}(a'_1, o \mid c = a'_0)\, \log(2\mathbb{P}(o \mid c = a'_0, a'_1)) + \mathbb{P}(a'_1, o \mid c = a'_1)\, \log(2\mathbb{P}(o \mid c = a'_1, a'_1))) \tag{78}$$

$$= N_{\mathsf{b}}(\mathbb{P}(a'_1, + \mid c = a'_0)\, \log(2\mathbb{P}(+ \mid c = a'_0, a'_1)) + \mathbb{P}(a'_1, + \mid c = a'_1)\, \log(2\mathbb{P}(+ \mid c = a'_1, a'_1))) \tag{79}$$

$$= N_{\mathsf{b}}\Big(\frac{1-\eta}{2C}\, \log(1-\eta) + \frac{1+\eta}{2C}\, \log(1+\eta)\Big) \tag{80}$$

$$= \frac{N_{\mathsf{b}}}{C}\, D_{\mathrm{KL}}(v_\eta \parallel v_0) \tag{81}$$

$$\leq \frac{N_{\mathsf{b}}\, \eta^2}{C} \tag{82}$$

Then from Eq. (69), and the fact that $\mathfrak{A}_{\mathsf{b}}$ is $(2\varepsilon, \delta)$-PAC,

$$H(\delta) \geq H_2(P_e) \geq \log 2 - \frac{N_{\mathsf{b}}\, \eta^2}{C} \tag{83}$$

$$\Rightarrow N_{\mathsf{b}} \geq \frac{C}{\eta^2}(\log 2 - H(\delta)) \tag{84}$$

Which means that this must be φ_{b}, the requirement for $\mathfrak{A}_{\mathsf{b}}$.

Finally, to compose the results from both branches, we observe that $|\mathcal{D}| = |\mathcal{D}_{\mathsf{p}}| + |\mathcal{D}_{\mathsf{b}}|$. Hence, the full algorithm $\mathfrak{A}$ requires either a number of samples that is exponential in L or

$$|\mathcal{D}| \in \Omega\Big(\frac{L}{\xi}\Big) + \frac{C}{\eta^2}(\log 2 - H(\delta)) \tag{85}$$

To relate the parameters to features of the RDP, we observe that the number of states of any RDP in $\mathbb{R}(L, H, \xi, \eta)$ is $Q \leq 3H$. Also, the behavior policy is uniform everywhere except in q_{bL}. Assuming $C \geq 2$, the computation of the single-policy concentrability coefficient yields $C^*_{\mathbf{R}} = C$, for any $c \in \{a'_0, a'_1\}$. Next, we compute the L^p_1-distinguishability of any RDP in this class. The L^p_1-distinguishability of a set of states $\mathcal{Q}$ is the minimum L_1 distance in distribution between episodes prefixes that are generated starting from any two states in $\mathcal{Q}$. Let us consider the pair q_{01} and q_{11},

$$\|\mathbb{P}(e_{1:H} \mid q_{01}, \pi^{\mathsf{b}}) - \mathbb{P}(e_{1:H} \mid q_{01}, \pi^{\mathsf{b}})\|_1 = \tag{86}$$

$$= \sum_{e \in \mathcal{E}_{H-1}} |\mathbb{P}(e_{1:H} = e \mid q_{01}) - \mathbb{P}(e_{1:H} = e \mid q_{11})| \tag{87}$$

$$= \sum_{earo \in \mathcal{E}_L} \mathbb{P}(e_{1:L-1} = e)|\mathbb{P}(a_L = a, r_L = r, o_L = o \mid q_{01}, e) - \mathbb{P}(a_L = a, r_L = r, o_L = o \mid q_{11}, e)| \tag{88}$$

$$= \sum_{ao \in \mathcal{A}\mathcal{O}} |\mathbb{P}(a_L = a, o_L = o \mid q_{0L}) - \mathbb{P}(a_L = a, o_L = o \mid q_{1L})| \tag{89}$$

$$= (1/2) \sum_{o \in \mathcal{O}} |\mathbb{P}(o_L = o \mid a_L = a'_0, q_{0L}) - \mathbb{P}(o_L = o \mid a_L = a'_0, q_{1L})| \tag{90}$$

$$= \qquad +(1/2) \sum_{o \in \mathcal{O}} |\mathbb{P}(o_L = o \mid a_L = a'_1, q_{0L}) - \mathbb{P}(o_L = o \mid a_L = a'_1, q_{1L})| \tag{91}$$

$$= \sum_{o \in \mathcal{O}} |\mathbb{P}(o_L = o \mid a_L = a'_0, q_{0L}) - \mathbb{P}(o_L = o \mid a_L = a'_0, q_{1L})| \tag{92}$$

$$= 2|\mathbb{P}(o_L = + \mid a_L = a'_0, q_{0L}) - \mathbb{P}(o_L = + \mid a_L = a'_0, q_{1L})| \tag{93}$$

$$= 2\xi \tag{94}$$

The L_1 distance for episode prefixes of length at least L is also 2ξ. On the other hand, any shorter prefix has a distance of 0. Then, the L^{p}_1-distinguishability of q_{01}, q_{11} is $\mu_0 \geq 2\xi$. The same is true for all pairs q_{0i} and q_{1i}. The distance between any other pair of states in the same layer is strictly higher, since they differ in some immediate reward or observation. Hence, the L^{p}_1-distinguishability of the entire RDP is $\mu_0 \geq 2\xi$. Now, we choose $L = H/2$, $\eta = 32\,\varepsilon/H$ and we assume $\varepsilon \leq \mu_0/32$, $H \geq 2$. We can verify that these choices are consistent with the previous assumption $\min\{\xi, \eta\} \geq \frac{16\,\varepsilon}{H-L}$. Substituting, the final requirement φ for the complete algorithm $\mathfrak{A}$ is an exponential number of episodes in H or:

$$|\mathcal{D}| \in \Omega\Big(\frac{H}{\mu_0}\Big) + \frac{C^*_{\mathbf{R}} H^2}{2^{10}\,\varepsilon^2}(\log 2 - H(\delta)) \tag{95}$$

For any $\delta \in (0, 0.5)$, say $1/4$, $(\log 2 - H(\delta))$ becomes a positive constant, and we can write

$$|\mathcal{D}| \in \Omega\Big(\frac{H}{\mu_0} + \frac{C^*_{\mathbf{R}} H^2}{\varepsilon^2}\Big) \tag{96}$$

Now, for any $H, \mu_0, C^*_{\mathbf{R}}, \varepsilon$ satisfying the previous assumptions, any algorithm cannot be $(\varepsilon, 1/4)$-optimal for the instances in $\mathbb{R}(H/2, H, \mu_0, 32\,\varepsilon/H)$ if Eq. (96) is not satisfied. □