π-CoT: Prolog-Initialized Chain-of-Thought Prompting for Multi-Hop Question-Answering

Anonymous authors
Paper under double-blind review

Abstract

Chain-of-Thought (CoT) prompting significantly enhances large language models' (LLMs) problem-solving capabilities, but still struggles with complex multi-hop questions, often falling into circular reasoning patterns or deviating from the logical path entirely. This limitation is particularly acute in retrieval-augmented generation (RAG) settings, where obtaining the right context is critical. We introduce **P**rolog-**I**nitialized **C**hain-**o**f-**T**hought (π-CoT), a novel prompting strategy that combines logic programming's structural rigor with language models' flexibility. π-CoT reformulates multi-hop questions into Prolog queries decomposed as single-hop sub-queries. These are resolved sequentially, producing intermediate artifacts, with which we initialize the subsequent CoT reasoning procedure. Extensive experiments demonstrate that π-CoT significantly outperforms standard RAG and in-context CoT on multi-hop question-answering benchmarks.

1 Introduction

Chain-of-thought (CoT) reasoning has emerged as a powerful paradigm for enhancing the problem-solving capabilities of large language models, substantially improving performance on arithmetic, commonsense, and symbolic reasoning tasks (Wei et al., 2022; Kojima et al., 2022). By encouraging models to articulate their reasoning process through intermediate steps, CoT enables more systematic and interpretable problem-solving approaches (Zhang et al., 2022; Wang et al., 2022). However, as the complexity of reasoning tasks increases—particularly in multi-hop scenarios where multiple interconnected inferences must be made—CoT systems have been observed to generalize poorly (Dziri et al., 2023) and become trapped in circular reasoning patterns (Lo et al., 2023; Yao et al., 2023).

This limitation becomes especially pronounced in retrieval-augmented generation (RAG) systems, where CoT excels at single-hop questions that require straightforward document retrieval and reasoning, but struggles significantly with multi-hop queries that demand the integration of information across multiple sources and reasoning steps (Asai et al., 2023). The fundamental challenge lies in CoT's inherent trade-off: while its flexibility allows for creative and adaptive reasoning, this same flexibility can lead to unstructured exploration that fails to maintain logical consistency across complex reasoning chains.

Recent work has explored decomposition-based approaches that break multi-hop questions into manageable single-hop questions (Khot et al., 2023; Zhou et al., 2023; Min et al., 2019). However, even with decomposition, critical gaps remain: models struggle to generate high-quality decompositions without supervision (Patel et al., 2022; Wolfson et al., 2020), fail at reliable fact composition across steps (Press et al., 2023), and lose track of intermediate state in long reasoning chains (Yen et al., 2024; Liu et al., 2024). These failures suggest the need for a more principled reasoning framework that can enforce structure while maintaining flexibility.

In contrast to natural-language reasoning pioneered by CoT, the structured reasoning paradigm has been extensively studied for decades in artificial intelligence and logic programming (Kowalski & Smoliar, 1982; Russell et al., 1995; McCarthy et al., 1960; Simon & Newell, 1971). Prolog, a declarative programming language explicitly designed for structured reasoning tasks, exemplifies this approach through its systematic query resolution mechanisms and logical rule-based inference (Robinson, 1965; Kowalski & Smoliar, 1982; Clocksin & Mellish, 2003). While Prolog's rigid structure ensures logical consistency, it lacks the flexibility to

handle ambiguous natural language, cannot easily incorporate unstructured text from documents, and requires precise logical formulations that may not capture the nuanced reasoning needed for real-world questions.

Recognizing that Prolog and CoT possess complementary strengths and weaknesses, we introduce **Prolog-Initialized Chain-of-Thought (π-CoT)**, a novel prompting strategy that combines the structural rigor of logic programming with the contextual flexibility of natural language reasoning. Our approach begins by algorithmically reformulating complex multi-hop reasoning questions into equivalent Prolog queries, where each query is deliberately decomposed into a sequence of single-hop sub-queries. These sub-queries are then resolved systematically: each is translated into natural language and posed to a RAG (Lewis et al., 2020; Gao et al., 2023) or in-context CoT system, which retrieves relevant documents and generates answers. The resulting answers are translated back into Prolog facts and incorporated into the evolving knowledge base.

The key insight underlying π-CoT is that by structuring the reasoning process through Prolog's query resolution mechanism, we ensure that the retrieved context remains highly relevant. Rather than allowing the model to freely explore the reasoning space, potentially losing track of relevant information or pursuing irrelevant tangents (Yao et al., 2023; Dziri et al., 2023), our approach maintains a structured trajectory that systematically builds toward the final answer.

At the completion of the Prolog resolution process, we concatenate the original question, all retrieved documents, and the structured Prolog derivation to create a comprehensive context that initializes the final CoT reasoning step. Because most of the heavy-lifting already happens in the initialization process, the final CoT reasoning is far simpler and more successful.

Through extensive experimental evaluation, we demonstrate that π-CoT is on par or better than traditional RAG and in-context systems on multi-hop question-answering (QA) benchmarks, including HotpotQA, 2WikiMultiHopQA, MuSiQue, and PhantomWiki. Our results suggest that the principled integration of symbolic reasoning structures with neural language models offers a promising direction for developing more reliable and interpretable reasoning systems.

2 Related Works

Decomposition for multi-hop question-answering. Breaking down a complex problem into smaller, manageable parts is a common technique in LLM prompting (Zhou et al., 2023; Khot et al., 2023; Wei et al., 2022). For open-domain QA, Press et al. (2023) prompt the model to generate follow-up questions, and Trivedi et al. (2023) take each new sentence in a CoT as input to the retriever. Importantly, the language model decomposes the question in natural-language steps. Recent works have also explored the use of *explicit plans*, usually in the form of Python programs (Surís et al., 2023; Khattab et al., 2022). While we do not provide a direct comparison due to different model sizes and/or retrieval setups, Monte Carlo Tree Search (Tran et al., 2024), test-time scaling (Wang et al., 2025), and reinforcement learning methods (Li et al., 2025; Jin et al., 2025a; Song et al., 2025) are emerging as promising approaches to open-domain QA.

Improving language model reasoning with Prolog. Many prior works generate Prolog from natural language to improve arithmetic reasoning or multi-hop question-answering. Wu & Liu (2025); Vakharia et al. (2024); Borazjanizadeh & Piantadosi (2024) translate questions into Prolog, then query a knowledge base. However, they assume the knowledge base has already been populated with facts. Therefore, they do not address retrieval from unstructured documents. Tan et al. (2024); Yang et al. (2024) utilize Prolog as a source of supervised training signals for math and logical reasoning. Weber et al. (2019) propose a weak unification strategy in Prolog based on semantic similarity. However, their approach requires training and uses pre-defined predicates extracted from the training text. The method closest to our work is that of Chen et al. (2019). They train an LSTM "programmer" to generate programs, which are executed using a BERT-based "reader" to produce answers. In this work, we contribute a training-free strategy and demonstrate its effectiveness with recent LLMs like Llama-3.3-70B-Instruct and Deepseek-R1-Distill-Qwen-32B, using both sparse and dense retrievers. The results of Chen et al. (2019) are also limited by the strictness of a pure Prolog execution.

Fact extraction and summarization. Extracting knowledge graph triples from unstructured text is a classical problem in NLP, also known as open information extraction (OpenIE) (Angeli et al., 2015; Pei

et al., 2023; Zhou et al., 2022). To enhance conventional retrieval techniques, LightRAG (Guo et al., 2024) and HippoRAG (Jimenez Gutierrez et al., 2024; Gutiérrez et al., 2025) demonstrate the effectiveness of fact extraction and GraphRAG (Edge et al., 2024) and RAPTOR (Sarthi et al., 2024) propose methods for clustering and summarization. Among these methods, HippoRAG 2 from Gutiérrez et al. (2025) performs the best on HotpotQA, 2WikiMultiHopQA, and MuSiQue. We provide a direct comparison of our method to HippoRAG 2 in the results section below.

3 Preliminaries

Dating back to the 1970s, Prolog[1] is a powerful way to represent factual knowledge and perform logical inference (Colmerauer & Roussel, 1996; Russell et al., 1995; Sterling & Shapiro, 1994). Solutions in Prolog are verifiable and compositional, making it particularly well-suited for multi-hop question answering where intermediate steps must be chained reliably.

Representing factual knowledge. Consider the the following English sentence about *Harry Potter* (Rowling, 1997). This statement:

> *Lockhart is a Defense against the Dark Arts teacher at Hogwarts.*

can be represented as the following Prolog **fact**:

```
DADA_teacher("Lockhart", "Hogwarts").
```

In Prolog, `DADA_teacher` is a **predicate** and "Lockhart" and "Hogwarts" are **assignments**. A large amount of real-world knowledge can be encoded in this structured, relational form. In fact, as of early 2025, Wikidata contained over 1.65 billion such knowledge triples.[2] Throughout the paper, we refer to a collection of Prolog facts as a **knowledge base**.

Multi-hop questions as Prolog queries. Prolog doesn't just store facts—it also allows us to query them. A **Prolog query** comprises one or more predicates with unassigned variables and asks whether any satisfying variable assignment exists. Consider the following example:
Example 1. *Who is the wife of the Defense Against the Dark Arts teacher at Hogwarts who is also a werewolf?*

One way of answering this question involves first identifying all the Defense against the Dark Arts teachers at Hogwarts, then filtering for those who are also werewolves, and finally retrieving the wives of the selected people. Each step depends on resolving the previous step(s), and the intermediate space of possible answers can be large. (Note that J.K. Rowling's books mention seven Defense against the Dark Arts teachers at Hogwarts, so a language model would have to consider seven separate reasoning paths to answer the question.) A concise way of expressing Example 1 is the following Prolog query:

```
DADA_teacher(X, "Hogwarts"),
werewolf(X),                                    (1)
wife(X, Y),
```

with `Y` representing the answer. Translating questions in natural language to structured queries is a classical problem in the community (Zelle & Mooney, 1996; Zettlemoyer & Collins, 2012).

A **solution** to a Prolog query is a set of variable assignments. Assuming we have a pre-populated knowledge base, the solutions are obtained by executing the query. For example, a knowledge base containing the facts `DADA_teacher("Lockhart", "Hogwarts")`, `werewolf("Lupin")`, and `wife("Lupin", "Tonks")` yields the following solution to query Equation (1):

```
X = "Lupin",
Y = "Tonks".
```

[1]We specifically use the SWI-Prolog implementation (Wielemaker et al., 2012) of Prolog due to its rich support of aggregation and if-then-else logic, which allows us to resolve questions like "How many Defense against the Dark Arts teachers have been at Hogwarts?".

[2]https://en.wikipedia.org/wiki/Wikidata

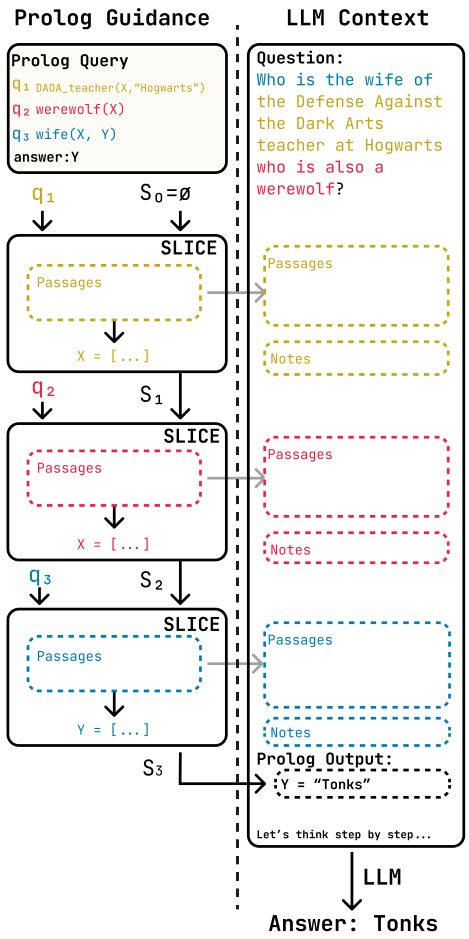

Figure 1: **Overview of π-CoT.** Left: π-CoT executes an LLM-generated Prolog query, using the `SLICE` module to resolve each sub-query q_t. Right: π-CoT uses the passages, notes, and (potentially) answer from the `SLICE` modules to initialize the CoT prompt for the final LLM call.

4 Prolog-Initialized Chain-of-Thought

Prolog and LLMs are both powerful tools for reasoning, but they have complementary strengths and weaknesses. While Prolog provides a precise and verifiable framework for multi-hop reasoning, it assumes access to a *structured* database, which is often difficult to obtain in practice. In contrast, LLMs can adeptly retrieve and extract information from *unstructured* text, but cannot guarantee logical consistency across reasoning steps.

Motivated by these observations, we combine Prolog and LLMs in two ways: a) we initialize the CoT prompt with the execution trace of a Prolog query. This mitigates LLMs' tendency to diverge from successful reasoning paths for CoT prompting.

b) we retrieve relevant information from available documents with the LLM and generate Prolog facts. This provides Prolog an indirect mechanism to interface natural-language documents and create a structured database.

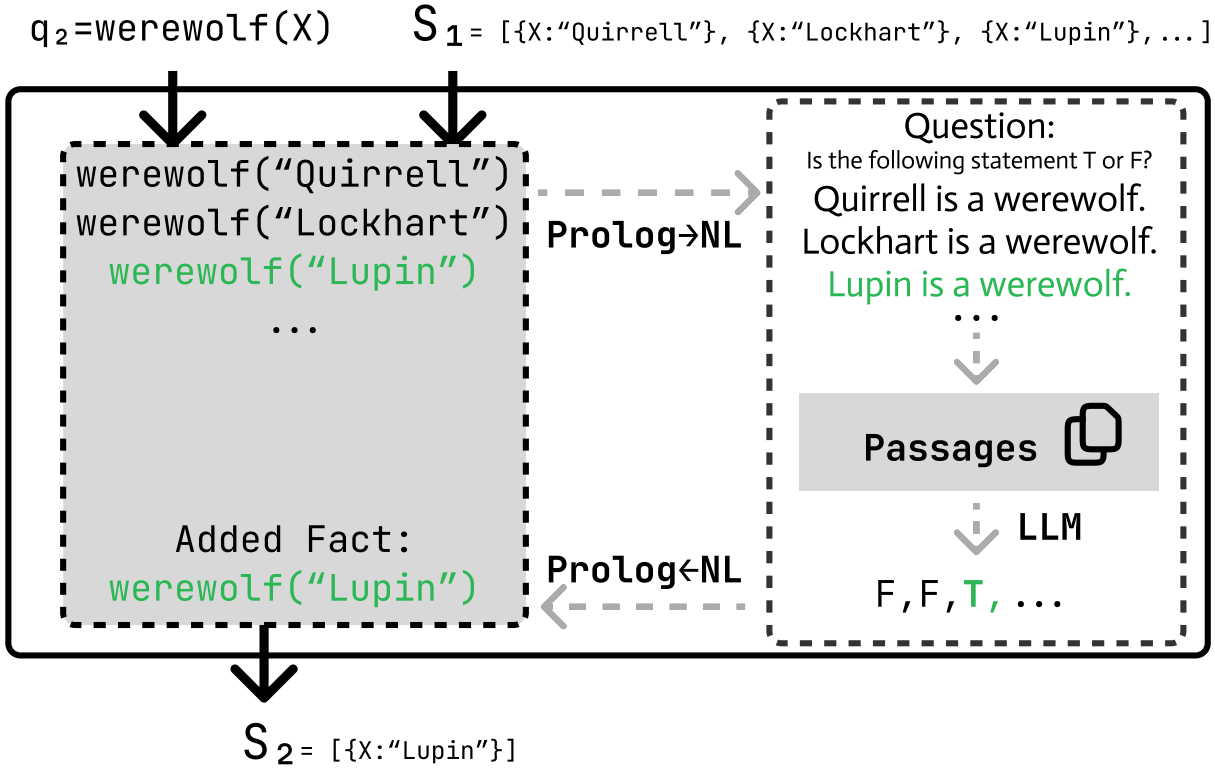

Figure 2: **SLICE module for fact verification in the RAG setting.** At step $t = 2$, the module takes in the previous state S_1 containing variable assignments, the current sub-query q_2, and the corpus $\mathcal{C}$ (not shown) as inputs and outputs S_2. Only the Prolog fact (in green) corresponding to a valid statement is added to a growing knowledge base.

Prolog-Initialized CoT. Our resulting workflow (π-CoT) is illustrated in Figure 1. Given the question in natural language, we first prompt[3] the LLM to generate a structured **Prolog query**:

$$Q = (q_1, q_2, \ldots, q_T).$$

Here, q_i is a **sub-query**. The query Q can be resolved step-by-step, one sub-query at a time. By design, the **answer** to the original question lies in one of these sub-queries, usually the last one. For example, the question in Example 1 yields the Prolog query Equation (1) with $T = 3$ and answer `Y`.

π-CoT resolves the query step-by-step and logs the execution trace along the way. At step t, π-CoT stores the set of all possible solutions, S_t, to the partially formed Prolog query $(q_1, \ldots, q_t)$. Each element in S_t is a dictionary of key-value pairs, where the keys are the names of all variables (e.g. `X`, `Y`) in the Prolog query and the values are valid assignments (e.g. `Lupin`).

4.1 Single-Step Execution with SLICE

Each step t follows a fixed procedure, which we refer to as SLICE (**S**ingle-step **L**ogical **I**nference with **C**ontextual **E**vidence). Given S_{t-1} from the previous iteration, we resolve the next sub-query q_t and create S_t. The sub-query q_t can be of exactly two types: **Verification** (e.g. `werewolf(X)`), or **Extraction** (e.g. `wife(X,Y)`). Verification queries reduce the set of solutions in S_{t-1} to those compatible with the query (e.g. removing all teacher names assigned to `X` that are not werewolves). This scenario is shown in Figure 2 for

[3]We provide the query generation prompt in App. B.1.

sub-query q_2. Extraction queries add new variables to S_t that satisfy the query constraint (e.g. adding variable `Y` and assigning it the names of all teachers' wives already assigned to `X`). We resolve both query types with the help of the LLM and the available reference documents, while logging the retrieved document *passages* and Prolog facts (rephrased in natural language as *Notes*). The Prolog facts are stored in a Prolog knowledge base, allowing us to execute the query $(q_1, \ldots, q_t)$ with an off-the-shelf Prolog interpreter and log its answer. We initialize $S_0 = \emptyset$, as the empty set. We provide additional details of the `SLICE` module in App. A.

4.2 `SLICE` Chaining

The inputs to the `SLICE` module are the sub-query q_t, the previous solutions S_{t-1}, and the document corpus $\mathcal{C}$. The output of the `SLICE` module is S_t. To derive the final solution, we chain the `SLICE` modules as follows:

$$S_t = \texttt{SLICE}(q_t, S_{t-1}, \mathcal{C}), \quad t = 1, 2, \ldots, T,$$
$$S_0 = \emptyset.$$

By design, the set of solutions is initially empty (i.e., $S_0 = \emptyset$). As the Prolog execution progresses—and more Prolog facts are collected—S_t gets closer to the final solution. After all sub-queries are resolved, S_T is a set of solutions containing the final answer. For example, Figure 1 shows $S_3 = [\{\texttt{Y} : \texttt{"Tonks"}\}]$ as the final solution.

4.3 Combining Symbolic and Natural Language Reasoning

In summary, the iterative process of `SLICE` chaining generates the following artifacts:

- a collection of retrieved **passages** from each `SLICE` execution[4];
- a collection of Prolog facts, which we convert into natural language (i.e., "**notes**"); and
- the **answer** from Prolog execution.

The passages contain the necessary factual context to answer the original question. Since these passages may also contain superfluous information, the notes help to focus the model only on relevant information. Due to their iterative construction, these notes also serve to guide the LLM like breadcrumbs toward the final answer. When the final solution is non-empty, the LLM merely needs to return it. For the best results, we provide all three artifacts to the LLM and invoke chain-of-thought reasoning to produce the final answer[5].

5 Main Results

We consider two settings: **(1) open-domain question-answering**, when the corpus is too large to fit within the model's context window, and **(2) in-context question-answering**, when the corpus does fit within the model's context window. The open-domain and in-context QA settings are also known as the *fullwiki* and *distractor* settings in the literature (Yang et al., 2018). To overcome the context limitations in the open-domain QA setting, we use retrieval augmented generation (RAG) to first fetch relevant passages before generation. Since π-CoT is a prompting method, we require a strong instruction-tuned model and employ the Llama-3.3-70B-Instruct model from Grattafiori et al. (2024). We also provide results utilizing the Deepseek-R1-Distill-Qwen-32B model from (Guo et al., 2025) in the in-context question-answering setting.

5.1 Open-Domain Question-Answering

We evaluate π-CoT on three multi-hop QA datasets: (1) HotpotQA from Yang et al. (2018), (2) 2WikiMultiHopQA from Ho et al. (2020), and (3) MuSiQue from Trivedi et al. (2022). (PhantomWiki-S/M fit entirely within the context windows of Llama-3.3-70B-Instruct and DeepSeek-R1-Distill-Qwen-32B, so we are not evaluating on them.) Since these datasets are curated from Wikipedia, we can assess Prolog's effectiveness in handling real-world knowledge. For our retrieval setup, we use the preprocessed December 18, 2020 corpus

[4]In the in-context setting, the retrieved passages and original passages are the same.
[5]See App. B.3 for the prompt template.

Table 1: **Accuracy of prompting-based methods on open-domain QA.** We report mean ± 1 standard error for exact match (EM) and F1 score across 500 randomly chosen questions from each dataset. Bold indicates that no other method performs significantly better.

	HotpotQA		**2WikiMultiHopQA**		**MuSiQue**	
Method	EM ↑	F1 ↑	EM ↑	F1 ↑	EM ↑	F1 ↑
Standard RAG	**38.8 ± 2.2**	**52.6 ± 2.0**	37.2 ± 2.2	40.4 ± 2.1	11.0 ± 1.4	18.1 ± 1.5
Self-Ask	19.2 ± 1.8	28.0 ± 1.8	15.8 ± 1.6	21.8 ± 1.7	5.6 ± 1.0	9.1 ± 1.2
IRCoT	**40.4 ± 2.2**	**52.9 ± 2.0**	32.4 ± 2.1	42.5 ± 2.0	**17.6 ± 1.7**	**24.5 ± 1.8**
π-CoT (Ours)	**42.0 ± 2.2**	**59.1 ± 1.9**	**49.4 ± 2.2**	**57.5 ± 2.1**	**15.2 ± 1.6**	**25.7 ± 1.7**

Note: Given a dataset and metric, we perform a repeated measures ANOVA followed by Tukey's HSD with $\alpha = 0.05$ to test significance of paired differences between methods.

Table 2: **Efficiency of prompting-based methods on open-domain QA.** We report mean ± 1 standard error number of BM25 queries, LLM calls, and total tokens for the same questions used in Table 1. We further break down the total tokens into prompt and completion tokens in Table 6.

	HotpotQA			**2WikiMultiHopQA**			**MuSiQue**		
Method	BM25	LLM	Tokens(k)	BM25	LLM	Tokens(k)	BM25	LLM	Tokens(k)
Standard RAG	1	1	3.6	1	1	3.7	1	1	2.4
Self-Ask	3.36	3.36	15	3.44	3.44	16	3.29	3.29	12
IRCoT	3.07	3.07	62	3.47	3.47	59	3.51	3.51	45
π-CoT (Ours)	2.82	4.82	18	2.14	4.14	22	3.42	5.42	15

from FlashRAG (Jin et al., 2025b), which contains 20M chunks each of size 100 words, and use BM25 (Robertson et al., 2009) as our retriever. We provide supplementary experiment details in Section C.1.

We structure our open-domain QA experiments around two complementary comparison goals.

First, in Tables 1 and 2, we compare π-CoT against widely used training-free multi-hop prompting baselines under a shared retrieval setup commonly adopted in prior work. This setting follows the FlashRAG benchmark and uses BM25 retrieval over a large Wikipedia corpus.

Second, in Table 3, our goal is to compare π-CoT against the state-of-the-art GraphRAG-based, OpenIE-augmented retrieval method **HippoRAG 2**, that outperforms GraphRAG (Edge et al., 2024), RAPTOR (Sarthi et al., 2024), and LightRAG (Guo et al., 2024) on multi-hop QA. To ensure fidelity to that comparison, we follow the experimental protocol of Gutiérrez et al. (2025), which uses dense retrieval and curated passage subsets.

Specifically, Table 1 compares π-CoT to standard RAG and two multi-hop RAG baselines that also rely on decomposition (via prompting) to handle multi-hop reasoning: **(1) Self-Ask** from Asai et al. (2023) and **(2) IRCoT** from (Trivedi et al., 2023). Among all training-free[6] methods in the FlashRAG repository, IRCoT was the top-performing training-free method on HotpotQA and the second top-performing method on 2WikiMultiHopQA at the time of writing. On HotpotQA, standard RAG, IRCoT, and π-CoT are comparable in terms of accuracy, with neither method significantly outperforming the other two as determined by a Tukey's HSD test with $\alpha = 0.05$. On 2WikiMultiHopQA, π-CoT significantly outperforms all other methods in terms of exact match and F1 score. On MuSiQue, IRCoT and π-CoT achieve comparable accuracy. Despite requiring only a single retriever call, standard RAG achieves surprisingly competitive accuracy on HotpotQA. Min et al. (2019); Chen & Durrett (2019) reveal that multi-hop reasoning is not required for many examples in HotpotQA, possibly explaining our findings. Notably, we find that π-CoT never performs worse than standard RAG, and does significantly better in the case of 2WikiMultiHopQA and MuSiQue.

[6]Fine-tuned approaches are currently the state-of-the-art on HotpotQA, 2WikiMultiHopQA, and MuSiQue.

Table 3: **Comparison to the state-of-the-art OpenIE method.** We report exact match (EM) and F1 on the splits from Gutiérrez et al. (2025, Tab. 2). We use Llama-3.3-70B-Instruct for generation and NV-Embed-v2 for embedding passages with $k = 5$ per query.

	HotpotQA		2WikiMultiHopQA		MuSiQue	
Method	EM ↑	F1 ↑	EM ↑	F1 ↑	EM ↑	F1 ↑
Standard RAG	61.2	74.5	58.3	63.2	34.9	44.8
HippoRAG 2	**62.6**	75.3	65.5	72.0	37.6	49.5
π-CoT (Ours)	60.3	**76.8**	**71.1**‡	**79.6**‡	**38.5**	**56.2**‡

Note: Due to computational constraints, we report single-run results on 1,000 questions per dataset. Statistical significance is computed using two-proportion z-tests: ‡indicates $p < 0.01$ compared to all baseline methods.

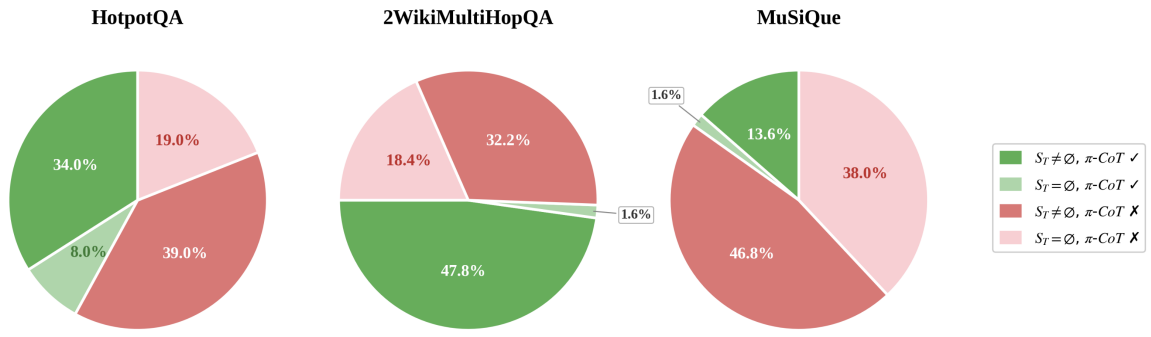

Figure 3: **Breakdown of π-CoT predictions by Prolog execution outcome.** Each pie chart shows the distribution of predictions from Table 1 across four categories based on whether Prolog returns an answer ($S_T \neq \emptyset$ vs. $S_T = \emptyset$) and whether the final answer is correct (green) or incorrect (red). Lighter shades indicate cases where Prolog returns no answer ($S_T = \emptyset$), while solid colors indicate successful Prolog execution ($S_T \neq \emptyset$).

To assess the efficiency of the methods in Table 1, we measure the number of BM25 queries, the number of LLM calls, and the total token usage. As shown in Table 2, π-CoT uses a similar number of BM25 queries as IRCoT and Self-Ask. We also observe π-CoT using more LLM calls on average than IRCoT and Self-Ask, which makes sense given that π-CoT must generate a Prolog query and perform the final chain-of-thought reasoning step. For the price of two extra LLM calls, π-CoT enjoys lower total token usage. In particular, the use of Prolog allows intermediate steps to use separate, short contexts during execution, rather than a single, long context that grows with the number of steps. Our results in Table 2 reflect this fundamental difference.

Next, we compare π-CoT to **HippoRAG 2**, an OpenIE-augmented retrieval method that outperforms GraphRAG (Edge et al., 2024), RAPTOR (Sarthi et al., 2024), and LightRAG (Guo et al., 2024) on multi-hop QA. We follow the experimental setup of Gutiérrez et al. (2025, Tab. 2), which uses the NV-Embed-v2 embedding model of Lee et al. (2024) for retrieval. Instead of using full Wikipedia as the corpus, this experiment uses 9811 passages for HotpotQA, 6119 passages for 2WikiMultiHopQA, and 11656 passages for MuSiQue. Table 3 reports mean exact match and F1 score on the provided 1000 samples for each dataset. These results show π-CoT outperforming both Standard RAG and HippoRAG 2, demonstrating that offline fact extraction is not necessary for good accuracy on multi-hop question-answering tasks.

5.2 In-Context Question-Answering

When all necessary information fits within the model's context window, we investigate when formal reasoning via π-CoT benefits over natural-language reasoning via CoT. We evaluate on distractor variants of HotpotQA, 2WikiMultiHopQA, and MuSiQue (where gold passages are presented alongside irrelevant distractors), as well

as PhantomWiki (Gong et al., 2025)—a contamination-free benchmark with fictional universes in two variants: PW-S and PW-M (10× larger corpus). On the Wikipedia-based datasets, π-CoT performs comparably to CoT with no statistically significant differences (Table 14), likely because providing gold passages makes the task considerably easier and Llama-3.3-70B-Instruct with CoT approaches a performance ceiling. However, on PhantomWiki, π-CoT substantially outperforms CoT: on PW-S, F1 increases from 71.9±1.0% to 91.4±0.6%; on PW-M, from 41.7±1.1% to 56.9±1.0% (36% relative gain). Analysis by question difficulty (Figure 4) reveals that π-CoT maintains accuracy on harder multi-hop questions while CoT degrades, demonstrating π-CoT's superior ability to track complex multi-branch reasoning chains. Additional details appear in Section C.2.

6 Ablation Analysis

We analyze how each component in π-CoT contributes to successfully answering multi-hop questions. Our analysis focuses on two aspects: (1) the role of Prolog-based symbolic reasoning, and (2) the contributions of different information sources in the final chain-of-thought step.

How does Prolog execution contribute to final accuracy? By design, when Prolog execution succeeds in finding an answer, the LLM in the final CoT step is instructed to copy the Prolog solution as its output. This naturally partitions our predictions into four categories based on two binary outcomes: whether Prolog returns a non-empty solution ($S_T \neq \emptyset$ vs. $S_T = \emptyset$), and whether the final answer is correct (π-CoT ✓vs. π-CoT ✗). Here, correctness is determined by exact match with the ground-truth answer.

Figure 3 shows the distribution of predictions from Table 1 across these four cases. We observe that Prolog successfully returns an answer in the majority of cases: 73% for HotpotQA, 80% for 2WikiMultiHopQA, and 60.4% for MuSiQue. More importantly, when Prolog does return an answer, π-CoT achieves substantially higher (dark green / dark region in Figure 3)) (46.6%, 60.0%, 22.5%) compared to the best baseline from Table 1 (40.4%, 37.2%, 17.6%), demonstrating that symbolic reasoning provides more reliable answers than pure neural approaches.

Interestingly, even when Prolog fails to return an answer ($S_T = \emptyset$), the artifacts generated during Prolog execution, such as intermediate reasoning notes and partial solutions, can still guide the LLM to the correct answer. This is particularly evident in HotpotQA, where 8.0% (light green in the leftmost pie in Figure 3) of questions are answered correctly despite Prolog returning an empty solution set. This suggests that the structured reasoning process itself, even when incomplete, provides valuable signal for the final answer generation.

For cases where π-CoT produces incorrect answers (red region, the remaining 27%, 20%, and 39.6% across the three datasets), we provide a detailed failure analysis and categorization in Section E.

What information sources are essential for the final CoT step? The final chain-of-thought reasoning step (Section 4) has access to three sources of information: retrieved passages, reasoning notes from Prolog execution, and the Prolog answer itself. To understand their relative importance, we perform cascading ablations by sequentially removing each component.

Table 4 presents our findings. First, removing passages causes F1 to drop by 4.7%, 1.2%, and 2.4% across the three datasets. This relatively modest drop suggests that most information needed to answer the question is already captured in the reasoning notes and Prolog answer—the retrieved passages primarily serve to fill in gaps or provide additional context.

Next, removing the reasoning notes leads to further drops of 4.8%, 0.6%, and 0.8% F1. The larger impact on HotpotQA (4.8% vs. 0.6–0.8% on other datasets) indicates that notes are particularly valuable for fuzzy matching when exact string matching in Prolog fails—a common occurrence in HotpotQA which often requires matching entity mentions with slight variations.

Finally, removing the Prolog answer itself causes performance to collapse dramatically on 2WikiMultiHopQA and MuSiQue (to 1.0% and 4.2% F1 respectively), while HotpotQA drops to 24.1% F1. At this point, the model has access only to the question itself. Although we instruct the model to answer based on provided context, the non-zero performance on HotpotQA (24.1% F1) suggests that Llama-3.3-70B-Instruct

Table 4: **Ablation analysis of information sources in the final chain-of-thought step.** We use the experimental setup from Table 1. Components are removed cumulatively from top to bottom.

	HotpotQA		**2WikiMultiHopQA**		**MuSiQue**	
Ablation	EM ↑	F1 ↑	EM ↑	F1 ↑	EM ↑	F1 ↑
π-CoT (Full)	42.0	59.1	49.4	57.5	15.2	25.7
w/o Passages	37.2	54.4	48.4	56.3	12.6	23.3
w/o Notes	34.0	49.6	47.8	55.7	12.4	22.5
w/o Prolog Answer	19.2	24.1	1.0	1.0	3.2	4.2

still relies on its parametric knowledge for this dataset, likely because HotpotQA questions involve more common knowledge that exists in the model's training data. In contrast, the near-zero performance on 2WikiMultiHopQA (1.0% F1) and MuSiQue (4.2% F1) indicates these datasets contain questions that are harder to answer from parametric knowledge alone, making the Prolog-derived reasoning indispensable.

We did not observe challenges with long context when including all passages, notes, and Prolog answers. Therefore, our final model includes all three components to maximize accuracy.

7 Conclusions & Future Work

In this work, we investigate how formal reasoning can guide reasoning in natural language. We introduce π-CoT, a novel prompting strategy that initializes the context of an LLM with the intermediate outputs of Prolog-guided execution. Our results show that even strong LLMs like Llama-3.3-70B-Instruct and Deepseek-R1-Distill-Qwen-32B benefit from being guided through structured reasoning steps, especially on complex, multi-step tasks. More broadly, our work demonstrates the potential of bringing explicit planning and state tracking into language model behavior.

Despite being a purely prompting-based strategy, π-CoT has potential implications for training future language models to serve as agents that can piece together knowledge across large, dynamic corpora. Inspired by DeepSeek R1 (Guo et al., 2025), significant effort has been made to couple reasoning with retrieval using reinforcement learning (Li et al., 2025; Jin et al., 2025a; Song et al., 2025). An interesting future direction is training language models to generate structured queries instead. π-CoT provides a way to execute these queries without a pre-existing database. Some steps in π-CoT may not even require calling an LLM, if the information resides directly in a pre-existing database. Thus, enabling π-CoT to leverage both unstructured and structured data is a natural next step.

Statement of Broader Impact

In this work, we propose a prompting-based method for improving multi-hop question answering by integrating symbolic reasoning structures with large language models. By constraining reasoning through Prolog-initialized, stepwise subqueries, the approach has potential to improve the reliability and consistency of multi-step reasoning. In addition, explicitly decomposing reasoning into structured subqueries and intermediate artifacts may make the reasoning process easier to inspect and retrace, potentially helping users understand how an answer was derived and identify points of failure.

At the same time, as discussed in Section 6, the use of Prolog introduces its own limitations, including brittleness arising from strict symbolic constraints such as string equality. More broadly, like other advances in language model reasoning, this work could indirectly enable more capable automated systems that may be misused for generating misleading or incorrect information at scale if deployed without appropriate safeguards. The proposed method is purely prompting-based and does not introduce new data sources,

training procedures, or deployment mechanisms, and therefore does not inherently alter the risk profile of existing large language models. Responsible use consequently depends on standard practices for evaluation, transparency, and oversight when applying such systems in real-world settings.

References

Gabor Angeli, Melvin Jose Johnson Premkumar, and Christopher D Manning. Leveraging linguistic structure for open domain information extraction. In *Proceedings of the 53rd Annual Meeting of the Association for Computational Linguistics and the 7th International Joint Conference on Natural Language Processing (Volume 1: Long Papers)*, pp. 344–354, 2015.

Akari Asai, Zeqiu Wu, Yizhong Wang, Avirup Sil, and Hannaneh Hajishirzi. Self-rag: Learning to retrieve, generate, and critique through self-reflection. In *The Twelfth International Conference on Learning Representations*, 2023.

Nasim Borazjanizadeh and Steven T Piantadosi. Reliable reasoning beyond natural language. *arXiv preprint arXiv:2407.11373*, 2024.

Samuel R Bowman, Gabor Angeli, Christopher Potts, and Christopher D Manning. The snli corpus. 2015.

Jifan Chen and Greg Durrett. Understanding dataset design choices for multi-hop reasoning. *arXiv preprint arXiv:1904.12106*, 2019.

Xinyun Chen, Chen Liang, Adams Wei Yu, Denny Zhou, Dawn Song, and Quoc V Le. Neural symbolic reader: Scalable integration of distributed and symbolic representations for reading comprehension. In *International Conference on Learning Representations*, 2019.

William F Clocksin and Christopher S Mellish. *Programming in PROLOG*. Springer Science & Business Media, 2003.

Alain Colmerauer and Philippe Roussel. The birth of prolog. In *History of programming languages—II*, pp. 331–367. 1996.

Nouha Dziri, Ximing Lu, Melanie Sclar, Xiang Lorraine Li, Liwei Jiang, Bill Yuchen Lin, Sean Welleck, Peter West, Chandra Bhagavatula, Ronan Le Bras, et al. Faith and fate: Limits of transformers on compositionality. *Advances in Neural Information Processing Systems*, 36:70293–70332, 2023.

Darren Edge, Ha Trinh, Newman Cheng, Joshua Bradley, Alex Chao, Apurva Mody, Steven Truitt, Dasha Metropolitansky, Robert Osazuwa Ness, and Jonathan Larson. From local to global: A graph rag approach to query-focused summarization. *arXiv preprint arXiv:2404.16130*, 2024.

Yunfan Gao, Yun Xiong, Xinyu Gao, Kangxiang Jia, Jinliu Pan, Yuxi Bi, Yixin Dai, Jiawei Sun, Haofen Wang, and Haofen Wang. Retrieval-augmented generation for large language models: A survey. *arXiv preprint arXiv:2312.10997*, 2(1), 2023.

Albert Gong, Kamilė Stankevičiūtė, Chao Wan, Anmol Kabra, Raphael Thesmar, Johann Lee, Julius Klenke, Carla P Gomes, and Kilian Q Weinberger. Phantomwiki: On-demand datasets for reasoning and retrieval evaluation. In *Forty-second International Conference on Machine Learning*, 2025.

Aaron Grattafiori, Abhimanyu Dubey, Abhinav Jauhri, Abhinav Pandey, Abhishek Kadian, Ahmad Al-Dahle, Aiesha Letman, Akhil Mathur, Alan Schelten, Alex Vaughan, et al. The llama 3 herd of models. *arXiv preprint arXiv:2407.21783*, 2024.

Daya Guo, Dejian Yang, Haowei Zhang, Junxiao Song, Peiyi Wang, Qihao Zhu, Runxin Xu, Ruoyu Zhang, Shirong Ma, Xiao Bi, et al. Deepseek-r1 incentivizes reasoning in llms through reinforcement learning. *Nature*, 645(8081):633–638, 2025.

Zirui Guo, Lianghao Xia, Yanhua Yu, Tu Ao, and Chao Huang. Lightrag: Simple and fast retrieval-augmented generation. *arXiv preprint arXiv:2410.05779*, 2024.

Bernal Jiménez Gutiérrez, Yiheng Shu, Weijian Qi, Sizhe Zhou, and Yu Su. From rag to memory: Non-parametric continual learning for large language models. In *Forty-second International Conference on Machine Learning*, 2025.

Xanh Ho, Anh-Khoa Duong Nguyen, Saku Sugawara, and Akiko Aizawa. Constructing a multi-hop qa dataset for comprehensive evaluation of reasoning steps. In *Proceedings of the 28th International Conference on Computational Linguistics*, pp. 6609–6625, 2020.

Bernal Jimenez Gutierrez, Yiheng Shu, Yu Gu, Michihiro Yasunaga, and Yu Su. Hipporag: Neurobiologically inspired long-term memory for large language models. *Advances in Neural Information Processing Systems*, 37:59532–59569, 2024.

Bowen Jin, Hansi Zeng, Zhenrui Yue, Jinsung Yoon, Sercan Arik, Dong Wang, Hamed Zamani, and Jiawei Han. Search-r1: Training llms to reason and leverage search engines with reinforcement learning. *arXiv preprint arXiv:2503.09516*, 2025a.

Jiajie Jin, Yutao Zhu, Zhicheng Dou, Guanting Dong, Xinyu Yang, Chenghao Zhang, Tong Zhao, Zhao Yang, and Ji-Rong Wen. Flashrag: A modular toolkit for efficient retrieval-augmented generation research. In *Companion Proceedings of the ACM on Web Conference 2025*, pp. 737–740, 2025b.

Omar Khattab, Keshav Santhanam, Xiang Lisa Li, David Hall, Percy Liang, Christopher Potts, and Matei Zaharia. Demonstrate-search-predict: Composing retrieval and language models for knowledge-intensive nlp. *arXiv preprint arXiv:2212.14024*, 2022.

Tushar Khot, Harsh Trivedi, Matthew Finlayson, Yao Fu, Kyle Richardson, Peter Clark, and Ashish Sabharwal. Decomposed prompting: A modular approach for solving complex tasks. In *The Eleventh International Conference on Learning Representations*, 2023.

Takeshi Kojima, Shixiang Shane Gu, Machel Reid, Yutaka Matsuo, and Yusuke Iwasawa. Large language models are zero-shot reasoners. *Advances in neural information processing systems*, 35:22199–22213, 2022.

Robert Kowalski and Steve Smoliar. Logic for problem solving. *ACM SIGSOFT Software Engineering Notes*, 7(2):61–62, 1982.

Woosuk Kwon, Zhuohan Li, Siyuan Zhuang, Ying Sheng, Lianmin Zheng, Cody Hao Yu, Joseph Gonzalez, Hao Zhang, and Ion Stoica. Efficient memory management for large language model serving with pagedattention. In *Proceedings of the 29th symposium on operating systems principles*, pp. 611–626, 2023.

Chankyu Lee, Rajarshi Roy, Mengyao Xu, Jonathan Raiman, Mohammad Shoeybi, Bryan Catanzaro, and Wei Ping. Nv-embed: Improved techniques for training llms as generalist embedding models. In *The Thirteenth International Conference on Learning Representations*, 2024.

Patrick Lewis, Ethan Perez, Aleksandra Piktus, Fabio Petroni, Vladimir Karpukhin, Naman Goyal, Heinrich Küttler, Mike Lewis, Wen-tau Yih, Tim Rocktäschel, et al. Retrieval-augmented generation for knowledge-intensive nlp tasks. *Advances in neural information processing systems*, 33:9459–9474, 2020.

Xiaoxi Li, Guanting Dong, Jiajie Jin, Yuyao Zhang, Yujia Zhou, Yutao Zhu, Peitian Zhang, and Zhicheng Dou. Search-o1: Agentic search-enhanced large reasoning models. *arXiv preprint arXiv:2501.05366*, 2025.

Nelson F Liu, Kevin Lin, John Hewitt, Ashwin Paranjape, Michele Bevilacqua, Fabio Petroni, and Percy Liang. Lost in the middle: How language models use long contexts. *Transactions of the Association for Computational Linguistics*, 12:157–173, 2024.

Robert Lo, Abishek Sridhar, Frank F Xu, Hao Zhu, and Shuyan Zhou. Hierarchical prompting assists large language model on web navigation. In *Findings of the Association for Computational Linguistics: EMNLP 2023*, pp. 10217–10244, 2023.

John McCarthy et al. *Programs with common sense*. RLE and MIT computation center Cambridge, MA, USA, 1960.

Sewon Min, Eric Wallace, Sameer Singh, Matt Gardner, Hannaneh Hajishirzi, and Luke Zettlemoyer. Compositional questions do not necessitate multi-hop reasoning. *arXiv preprint arXiv:1906.02900*, 2019.

Pruthvi Patel, Swaroop Mishra, Mihir Parmar, and Chitta Baral. Is a question decomposition unit all we need? In *Proceedings of the 2022 Conference on Empirical Methods in Natural Language Processing*, pp. 4553–4569, 2022.

Kevin Pei, Ishan Jindal, Kevin Chen-Chuan Chang, ChengXiang Zhai, and Yunyao Li. When to use what: An in-depth comparative empirical analysis of openie systems for downstream applications. In *Proceedings of the 61st Annual Meeting of the Association for Computational Linguistics (Volume 1: Long Papers)*, pp. 929–949, 2023.

Ofir Press, Muru Zhang, Sewon Min, Ludwig Schmidt, Noah A Smith, and Mike Lewis. Measuring and narrowing the compositionality gap in language models. In *Findings of the Association for Computational Linguistics: EMNLP 2023*, pp. 5687–5711, 2023.

Stephen Robertson, Hugo Zaragoza, et al. The probabilistic relevance framework: Bm25 and beyond. *Foundations and Trends® in Information Retrieval*, 3(4):333–389, 2009.

John Alan Robinson. A machine-oriented logic based on the resolution principle. *Journal of the ACM (JACM)*, 12(1):23–41, 1965.

JK Rowling. *Harry Potter*, volume 2007. London Bloomsbury, 1997.

Stuart Russell, Peter Norvig, and Artificial Intelligence. A modern approach. *Artificial Intelligence. Prentice-Hall, Egnlewood Cliffs*, 25(27):79–80, 1995.

Parth Sarthi, Salman Abdullah, Aditi Tuli, Shubh Khanna, Anna Goldie, and Christopher D Manning. Raptor: Recursive abstractive processing for tree-organized retrieval. In *The Twelfth International Conference on Learning Representations*, 2024.

Herbert A Simon and Allen Newell. Human problem solving: The state of the theory in 1970. *American psychologist*, 26(2):145, 1971.

Huatong Song, Jinhao Jiang, Yingqian Min, Jie Chen, Zhipeng Chen, Wayne Xin Zhao, Lei Fang, and Ji-Rong Wen. R1-searcher: Incentivizing the search capability in llms via reinforcement learning. *arXiv preprint arXiv:2503.05592*, 2025.

Leon Sterling and Ehud Y Shapiro. *The art of Prolog: advanced programming techniques*. MIT press, 1994.

Dídac Surís, Sachit Menon, and Carl Vondrick. Vipergpt: Visual inference via python execution for reasoning. In *Proceedings of the IEEE/CVF International Conference on Computer Vision*, pp. 11888–11898, 2023.

Xiaoyu Tan, Yongxin Deng, Xihe Qiu, Weidi Xu, Chao Qu, Wei Chu, Yinghui Xu, and Yuan Qi. Thought-like-pro: Enhancing reasoning of large language models through self-driven prolog-based chain-of-thought. *arXiv preprint arXiv:2407.14562*, 2024.

Hieu Tran, Zonghai Yao, Junda Wang, Yifan Zhang, Zhichao Yang, and Hong Yu. Rare: Retrieval-augmented reasoning enhancement for large language models. *arXiv preprint arXiv:2412.02830*, 2024.

Harsh Trivedi, Niranjan Balasubramanian, Tushar Khot, and Ashish Sabharwal. MuSiQue: Multihop questions via single-hop question composition. *Transactions of the Association for Computational Linguistics*, 10: 539–554, 2022.

Harsh Trivedi, Niranjan Balasubramanian, Tushar Khot, and Ashish Sabharwal. Interleaving retrieval with chain-of-thought reasoning for knowledge-intensive multi-step questions. In *Proceedings of the 61st Annual Meeting of the Association for Computational Linguistics (Volume 1: Long Papers)*, pp. 10014–10037, 2023.

Priyesh Vakharia, Abigail Kufeldt, Max Meyers, Ian Lane, and Leilani H Gilpin. Proslm: A prolog synergized language model for explainable domain specific knowledge based question answering. In *International Conference on Neural-Symbolic Learning and Reasoning*, pp. 291–304. Springer, 2024.

Liang Wang, Haonan Chen, Nan Yang, Xiaolong Huang, Zhicheng Dou, and Furu Wei. Chain-of-retrieval augmented generation. *ArXiv*, abs/2501.14342, 2025. URL `https://api.semanticscholar.org/CorpusID:275906944`.

Xuezhi Wang, Jason Wei, Dale Schuurmans, Quoc Le, Ed Chi, Sharan Narang, Aakanksha Chowdhery, and Denny Zhou. Self-consistency improves chain of thought reasoning in language models. *arXiv preprint arXiv:2203.11171*, 2022.

Leon Weber, Pasquale Minervini, Jannes Münchmeyer, Ulf Leser, and Tim Rocktäschel. Nlprolog: Reasoning with weak unification for question answering in natural language. In *Proceedings of the 57th Annual Meeting of the Association for Computational Linguistics*. Association for Computational Linguistics, 2019.

Jason Wei, Xuezhi Wang, Dale Schuurmans, Maarten Bosma, Fei Xia, Ed Chi, Quoc V Le, Denny Zhou, et al. Chain-of-thought prompting elicits reasoning in large language models. *Advances in neural information processing systems*, 35:24824–24837, 2022.

Jan Wielemaker, Tom Schrijvers, Markus Triska, and Torbjörn Lager. Swi-prolog. *Theory and Practice of Logic Programming*, 12(1-2):67–96, 2012.

Tomer Wolfson, Mor Geva, Ankit Gupta, Matt Gardner, Yoav Goldberg, Daniel Deutch, and Jonathan Berant. Break it down: A question understanding benchmark. *Transactions of the Association for Computational Linguistics*, 8:183–198, 2020.

Katherine Wu and Yanhong A Liu. Lp-lm: No hallucinations in question answering with logic programming. *arXiv preprint arXiv:2502.09212*, 2025.

Xiaocheng Yang, Bingsen Chen, and Yik-Cheung Tam. Arithmetic reasoning with llm: Prolog generation & permutation. In *Proceedings of the 2024 Conference of the North American Chapter of the Association for Computational Linguistics: Human Language Technologies (Volume 2: Short Papers)*, pp. 699–710, 2024.

Zhilin Yang, Peng Qi, Saizheng Zhang, Yoshua Bengio, William Cohen, Ruslan Salakhutdinov, and Christopher D Manning. Hotpotqa: A dataset for diverse, explainable multi-hop question answering. In *Proceedings of the 2018 Conference on Empirical Methods in Natural Language Processing*, pp. 2369–2380, 2018.

Shunyu Yao, Jeffrey Zhao, Dian Yu, Nan Du, Izhak Shafran, Karthik R Narasimhan, and Yuan Cao. React: Synergizing reasoning and acting in language models. In *The Eleventh International Conference on Learning Representations*, 2023.

Howard Yen, Tianyu Gao, Minmin Hou, Ke Ding, Daniel Fleischer, Peter Izsak, Moshe Wasserblat, and Danqi Chen. Helmet: How to evaluate long-context language models effectively and thoroughly. *arXiv preprint arXiv:2410.02694*, 2024.

John M Zelle and Raymond J Mooney. Learning to parse database queries using inductive logic programming. In *Proceedings of the national conference on artificial intelligence*, pp. 1050–1055, 1996.

Luke S Zettlemoyer and Michael Collins. Learning to map sentences to logical form: Structured classification with probabilistic categorial grammars. *arXiv preprint arXiv:1207.1420*, 2012.

Zhuosheng Zhang, Aston Zhang, Mu Li, and Alex Smola. Automatic chain of thought prompting in large language models. *arXiv preprint arXiv:2210.03493*, 2022.

Denny Zhou, Nathanael Schärli, Le Hou, Jason Wei, Nathan Scales, Xuezhi Wang, Dale Schuurmans, Claire Cui, Olivier Bousquet, Quoc V Le, et al. Least-to-most prompting enables complex reasoning in large language models. In *The Eleventh International Conference on Learning Representations*, 2023.

Shaowen Zhou, Bowen Yu, Aixin Sun, Cheng Long, Jingyang Li, Haiyang Yu, Jian Sun, and Yongbin Li. A survey on neural open information extraction: Current status and future directions. *arXiv preprint arXiv:2205.11725*, 2022.

A Implementation Details of SLICE Module

Inputs. At step $t \in \{1, 2, \ldots, T\}$, SLICE[7] takes as input:

- the sub-query, q_t;
- the solution from the previous step, S_{t-1}; and
- the document corpus, $\mathcal{C}$.

At step $t = 1$, there are no solutions, so $S_0 = \emptyset$. At step $t > 1$, we assign any values in S_{t-1} to the variables in q_t. Let's take the second sub-query, q_2, from Figure 1 as an example. As shown in Figure 2, the previous solution S_1 assigns the following values to `X`: "Quirrell," "Lockhart," "Lupin," etc. These must be substituted into q_2 = `werewolf(X)`, yielding the queries `werewolf("Quirrell")`, `werewolf("Lockhart")`, `werewolf("Lupin")`, etc. to resolve for the current step.

While the query `werewolf("Quirrell")` provides a succinct way of checking whether the claim, "Quirrell was a werewolf," is true, it's still uninterpretable to an LLM. Thus, we need a mechanism to translate Prolog facts to natural-language statements. Our solution is to prompt[8] the LLM to generate a **definition** for q_t. Each definition comprises two templates:

- A **question template**, which maps q_t to a question (e.g., "Who are the Defense against the Dark Arts teachers at Hogwarts?").
- A **statement template**, which maps q_t to a claim (e.g., "Lockhart is a Defense against the Dark Arts teacher at Hogwarts.").

Each template serves a different purpose, either *fact extraction* or *fact verification*.

Fact extraction. When q_t introduces a new unassigned variable, SLICE uses the question template to map q_t to a natural-language question (see **Prolog→NL** in Figure 2). Next, we call the LLM using chain-of-thought prompting to answer this question (see **LLM** in Figure 2). We provide the LLM prompt in Section B.2. In this work, we consider two strategies to retrieve the relevant evidence for the question:

(S1) In the **RAG setting**, we use an external retriever to obtain the top-k passages from $\mathcal{C}$.

(S2) In the **in-context setting**, all passages of $\mathcal{C}$ are provided in the prompt.

Using its innate reading comprehension abilities, the LLM locates the answer to the question from the provided passages and responds with (potentially) multiple answers (e.g., Quirrell, Lockhart, Lupin, etc). These answers are parsed back into Prolog facts (see **Prolog←NL** in Figure 2) and added to the knowledge base.

Fact verification. When all variables in q_t can be assigned values from S_{t-1}, we must check that the fact is true. SLICE uses the statement template to generate an entailment question (Bowman et al., 2015). For example, `werewolf("Quirrell")` corresponds to the question, "Is the following statement true or false? Quirrell was a werewolf." Equipped with S1 or S2, the LLM answers this question (see **LLM** in Figure 2). A true claim is added to the knowledge base as a fact; a false claim is simply ignored (and nothing is added to knowledge base). In our running example, the only fact added to the knowledge base at step $t = 2$ is `werewolf("Lupin")` (see green text in Figure 2).

Output. Finally, the output of SLICE is the updated solution S_t, which can be obtained by querying the knowledge base with $(q_1, \ldots, q_t)$.

[7] short for **S**ingle-step **L**ogical **I**nference with **C**ontextual **E**vidence
[8] We provide the definitions generation prompt in Section B.1.

B Prompt Templates

B.1 Prolog Query and Definitions Generation

We use the following prompt template for the Prolog query generation of Section 4:

```
You will be provided a question. Your goal is to devise a
Prolog query to answer this question. Your response must end in
"**Query:** <query>\n**Target:** <target>\n**Definition:**
<definition>", where <query> is a Prolog query that when
executed, will yield the answer to the question, <target>
is the target variable in the Prolog query to be returned
as the final answer, and <definition> defines the semantic
meaning of predicates in the Prolog query.

Here are some examples:
(START OF EXAMPLES)
{examples}
(END OF EXAMPLES)

Question: {question}
Answer:
```

To form the prompt, `examples` is replaced with few-shot examples specific to each dataset and `question` is replaced with the natural-language question.

B.2 Chain-of-Thought Fact Extraction and Verification

```
You are given the following evidence:
(BEGIN EVIDENCE)
{{evidence}}
(END EVIDENCE)

You will be provided a question. If there is a single answer,
your response must end with the final answer enclosed in tags:
<answer>FINAL_ANSWER</answer>
If there are multiple answers, your response must end with the
final answers enclosed in tags:
<answer>FINAL_ANSWER_1, FINAL_ANSWER_2, ..., FINAL_ANSWER_N</answer>.
If FINAL_ANSWER_N is a string, it must be enclosed in double quotes.
For example, <answer>"FINAL_ANSWER_1", "FINAL_ANSWER_2"</answer>
If FINAL_ANSWER_N is a date, it must be formatted as
date(year, month, day).
If no information is available to answer the question,
your response must end with: <answer></answer>.

Here are some examples:
(START OF EXAMPLES)
{{examples}}
(END OF EXAMPLES)

Question: {{question}}
Answer:
```

To instantiate the prompt, `evidence` is replaced by relevant passages, `examples` is replaced with dataset-specific few-shot examples, and `question` is replaced with the natural-language question (in the case of fact extraction) or entailment question (in the case of fact verification). Both the instructions and few-shot examples encourage the model to format the answer as Prolog literals so that they can be properly inserted into the Prolog knowledge base.

B.3 π-CoT

```
You are given the following information:
(BEGIN NOTES)
{{notes}}
(END NOTES)

(BEGIN EVIDENCE)
{{evidence}}
(END EVIDENCE)

You will be provided a question and an answer from a previous
attempt. If the previous answer is not empty
(e.g. <answer>...</answer>), you should copy the answer directly.
If the previous answer is empty (i.e. <answer></answer>),
you should try to answer the question using
the notes and evidence provided. If there is a single answer,
your response must end with the final answer enclosed in tags:
<answer>FINAL_ANSWER</answer>
If there are multiple answers, your response must end with the
final answers enclosed in tags:
<answer>FINAL_ANSWER_1,FINAL_ANSWER_2,...,FINAL_ANSWER_N</answer>.
If no information is available to answer the question,
your response must end with: <answer></answer>.

Here are some examples:
(START OF EXAMPLES)
{{examples}}
(END OF EXAMPLES)
Question: {{question}}
Previous Answer: <answer>{{answer}}</answer>
Answer:
```

C Supplementary Experiment Details

C.1 Fullwiki experiment details

Retrieval setup. We use the `wiki18_100w` corpus from `https://huggingface.co/datasets/RUC-NLPIR/FlashRAG_datasets` and use the code from `https://github.com/RUC-NLPIR/FlashRAG` to build our BM25 index. We allow $k = 14$, $k = 16$, and $k = 8$ chunks per retrieval call for HotpotQA, 2WikiMultiHopQA, and MuSiQue, respectively.

Baseline implementations. For standard RAG, we use the Python implementation of `CoTRAGAgent` from `https://github.com/kilian-group/phantom-wiki` and write few-shot examples for each dataset. For Self-Ask, we use the Python implementation and few-shot examples from `https://github.com/RUC-NLPIR/FlashRAG`. For IRCoT, we use the Python implementation from `https://github.com/RUC-NLPIR/FlashRAG` and the GPT3 (`code-davincii-002`) few-shot examples from `https://github.com/StonyBrookNLP/ircot` (see also (Trivedi et al., 2023, App. G)). We set the maximum iterations for Self-Ask and IRCoT to be 4.

LLM configuration. We run Llama-3.3-70B-Instruct on 8 A6000s using vLLM (Kwon et al., 2023) and use greedy decoding with maximum generation tokens 4096. We use the full 128K context length.

C.2 Distractor Experiment Details

LLM configuration. For the Llama-3.3-70B-Instruct results, we use vLLM running on 8 A6000s and use greedy decoding with maximum generation tokens 4096. For the Deepseek-R1-Distill-Qwen-32B results, we use vLLM running on 6 A6000s and use sampling temperature 0.6, top-p 0.95, and max generation tokens 16384. We use the full 128K context length for both models.

PhantomWiki dataset. For the experiment of Table 14(b), we use the code at `https://github.com/kilian-group/phantom-wiki` to generate two synethic multi-hop QA datasets. Table 5 lists the configurations for PW-S and PW-M. Each dataset has 1500 questions.

Table 5: **Configurations for PhantomWiki dataset generation.**

Parameter	PW-S	PW-M
Question depth	20	20
Number of family trees	10	100
Max family tree size	50	50
Max family tree depth	20	20
Mode	Easy	Easy
Number of questions per template	10	10
Seeds	{1,2,3}	{1,2,3}

C.3 LLM Usage Statement

Large language models were used for proofreading, revising, and literature search. All claims and arguments were drafted and verified by the authors.

D Additional Details of Computational Cost

The results are shown in Table 6 and Table 7

Table 6: **Token cost of open-domain QA.** We report mean ± 1 standard error number of prompt tokens **P** (in thousands) and completion tokens **C** (in thousands) for the results in Table 2. We use the vLLM inference engine with prefix caching enabled and report the number of cached tokens in parentheses next to the prompt tokens.

	HotpotQA		**2WikiMultiHopQA**		**MuSiQue**	
Method	**P** $\times 10^3$	**C** $\times 10^3$	**P** $\times 10^3$	**C** $\times 10^3$	**P** $\times 10^3$	**C** $\times 10^3$
Standard RAG	3.46 (0.032)	0.159	3.63 (0.032)	0.106	2.21 (0.073)	0.136
Self-Ask	14.5 (10.5)	0.402	15.7 (10.9)	0.682	11.4 (9.06)	0.750
IRCoT	62.3 (51.5)	0.047	59.2 (44.6)	0.053	45.3 (38.1)	0.057
π-CoT	18.0 (5.07)	0.483	21.1 (4.21)	0.543	14.4 (3.28)	0.654

E Analysis of Prolog Errors

We manually inspected the results in Table 1 and identified the following Prolog errors:

Table 7: **Computational cost of in-context QA.** We report the mean ± 1 standard error number of prompt tokens **P** (in thousands), completion tokens **C** (in thousands), and LLM calls for the results in Table 14. We use the vLLM inference engine and report cached tokens (in parentheses) when prefix caching is enabled.

	HotpotQA			**2WikiMultiHopQA**			**MuSiQue**		
Method	**P** $\times 10^3$	**C** $\times 10^3$	Calls	**P** $\times 10^3$	**C** $\times 10^3$	Calls	**P** $\times 10^3$	**C** $\times 10^3$	Calls
Llama-3.3-70B-Instruct									
CoT	2.68	0.110	1	2.10	0.0845	1	3.43	0.116	1
π-CoT	12.4	0.412	4.37	11.0	0.437	4.47	16.1	0.553	4.90
DeepSeek-R1-Distill-Qwen-32B									
CoT	2.77	0.305	1	2.20	0.298	1	3.57	0.520	1
π-CoT	11.1	1.66	4.09	9.59	1.55	4.28	12.3	1.95	4.65

(a) Real-world (Wikipedia-based) multi-hop QA datasets

	PW-S			**PW-M**		
Method	**P** $\times 10^3$	**C** $\times 10^3$	Calls	**P** $\times 10^3$	**C** $\times 10^3$	Calls
Llama-3.3-70B-Instruct						
CoT	8.12 (8.09)	0.400	1	68.7 (68.6)	0.375	1
π-CoT	174 (173)	1.59	23.9	2800 (2754)	2.6	40
DeepSeek-R1-Distill-Qwen-32B						
CoT	8.30 (8.26)	1.42	1	70.8 (70.6)	1.13	1
π-CoT	234 (207)	7.28	21.0	1260 (1230)	7.09	16.8

(b) Synthetic multi-hop QA datasets

Table 8: **Percentage breakdown of Prolog errors for the results in Table 1.** We define the errors in App. E and provide examples for each.

Error Type	**HotpotQA**	**2WikiMultiHopQA**	**MuSiQue**
Parsing errors:			
Prolog query parsing error	0.8%	0%	0.8%
Execution parsing error	0.8%	0%	0.8%
Execution errors:			
Intermediate predicate existence error	16.2%	19.8%	37.4%
Final predicate existence error	9.2%	0.2%	0.6%
Total errors	27.0%	20.0%	39.6%

- Prolog Parsing Errors:
  - **Prolog query parsing error:** The LLM-generated Prolog query could not be parsed by our Prolog grammar. This error typically occurs due to missing double quotes (see examples in Tables 9 and 10).
  - **Extraction or verification parsing error:** the LLM-generated answer to the fact extraction or fact verification step is an invalid Prolog literal. This error typically occurs due to nested double quotes (see Table 11).
- Prolog Execution Errors:
  - **Intermediate predicate existence error:** Information is missing to solve at least one of the intermediate sub-queries.
  - **Final predicate existence error:** execution reaches the final step, but no match is returned. For this type, we observe two patterns: 1) genuinely missing information in the final sub-query, 2) mismatches

Table 9: **Prolog query parsing error from HotpotQA.** The constant "...Ready for It?" is missing double quotes in the Prolog query.

Question	...Ready for It? is a Taylor Swift song from the album scheduled to be released on what date?
Prolog Query	`album_of_song(...Ready for It?, A1),` `release_date(A1, A2)`

Table 10: **Prolog query parsing error from MuSiQue.** Negations (`\+`) are not allowed by our Prolog parser.

Question	which professional sports team would you not see play a home game in the arena where the last place Cream performed?

Prolog Query	`last_performance_venue("Cream", A1),`
	`all_professional_sports_teams(A3),`
	`\+home_teams(A1, A3)`

Table 11: **Fact extraction parsing error from HotpotQA.** The double quotes in the generated answer are incorrectly escaped.

Question	What Cantonese slang term can mean both "ghost man" and to refer to Westerners?
Response	"Gweilo" or "gwailou"

Table 12: **Execution error from HotpotQA.** The generated Prolog query involves the sub-query `(A1 == A2)` and cannot be satisfied by the facts in the knowledge base. Although "Royal Air Force (RAF)" and "No. 11 Group RAF" are semantically related, they are not equal under the Prolog operator `==`. The ground-truth answer is *Royal Air Force*.

Question	What were both Hawker Hurricane and No. 1455 Flight a part of?

Prolog Query	`part_of("Hawker Hurricane", A1),`
	`part_of("No.  1455 Flight", A2),`
	`(A1 == A2).`

Facts	`part_of("Hawker Hurricane", "Royal Air Force (RAF)").`
	`part_of("Hawker Hurricane", "Royal Yugoslav Air Force (VVKJ)").`
	`part_of("Hawker Hurricane", "Royal Canadian Air Force").`
	`part_of("No.  1455 Flight", "No.  11 Group RAF").`

due to Prolog's strict string equality. The latter can often be resolved when facts are provided back to the model for CoT reasoning. We provide two examples for this type (see examples in Table 12 and Table 13)

F In-context Question-Answering results

In this section, we show the results of In-context Question-Answering. Table 14(a) shows that on HotpotQA, 2WikiMultiHopQA, and MuSiQue, Providing the gold passages to model makes the task considerably easier than considering all of Wikipedia (Min et al., 2019). Thus, Llama-3.3-70B-Instruct with CoT may be hitting a performance ceiling. On PW-S, Llama-3.3-70B-Instruct with CoT achieves an F1 score of 71.9 ± 1.0%. This increases to 91.4 ± 0.6% with π-CoT. On PW-M, which has a corpus 10 times the size of PW-S, the performance of Llama-3.3-70B-Instruct with CoT drops to 41.7 ± 1.1% F1. We posit this drop is mainly due to the inherent challenges of long-context retrieval. On PW-M, π-CoT significantly boosts the F1 score to 56.9 ±

Table 13: **Execution error from MuSiQue.** The generated Prolog query involves a string unification (`A1 = A2`) and cannot be satisfied by the facts in the knowledge base. The ground-truth answer is John D. Loudermilk.

Question	Who wrote *Turn Me On*, which was performed by the person who also performed *Chasing Pirates*?

Prolog Query	`performer("Chasing Pirates", A1),`
	`performer("turn me on", A2),`
	`A1 = A2 -> writer("turn me on", A3).`

Facts	`performer("Chasing Pirates", "Norah Jones").`
	`performer("turn me on", "Sean Smith").`
	`writer("turn me on", "Greg Lake").`
	`writer("turn me on", "Logan Lynn").`
	`writer("turn me on", "Joni Mitchell").`

Table 14: **Accuracy of prompting-based methods on in-context QA.** We report exact match (EM) and F1 score on HotpotQA, 2WikiMultiHopQA, MuSiQue, PhantomWiki with a corpus size of 50 articles (PW-S), and PhantomWiki with a corpus size of 500 articles (PW-M). Bold indicates that π-CoT significantly outperforms CoT ($p < 0.05$) according to a paired samples t-test given a dataset and metric. We report the computational cost in Table 7.

	HotpotQA		**2WikiMultiHopQA**		**MuSiQue**	
Method	EM ↑	F1 ↑	EM ↑	F1 ↑	EM ↑	F1 ↑
Llama-3.3-70B-Instruct						
CoT	62.4 ± 2.2	77.4 ± 1.6	76.4 ± 1.9	83.9 ± 1.5	51.2 ± 2.2	63.7 ± 1.9
π-CoT	58.0 ± 2.2	77.7 ± 1.5	72.8 ± 2.0	82.5 ± 1.5	46.4 ± 2.2	63.1 ± 1.9
DeepSeek-R1-Distill-Qwen-32B						
CoT	57.0 ± 2.2	74.2 ± 1.7	75.2 ± 1.9	82.9 ± 1.6	45.8 ± 2.2	57.3 ± 2.0
π-CoT	56.8 ± 2.2	75.2 ± 1.6	74.6 ± 1.9	84.2 ± 1.5	46.0 ± 2.2	59.6 ± 2.0

(a) Wikipedia-based in-context multi-hop QA datasets

	PW-S		**PW-M**	
Method	EM ↑	F1 ↑	EM ↑	F1 ↑
Llama-3.3-70B-Instruct				
CoT	52.8 ± 1.3	71.9 ± 1.0	27.5 ± 1.2	41.7 ± 1.1
π-CoT	**78.8 ± 1.1**	**91.4 ± 0.6**	**31.1 ± 1.2**	**56.9 ± 1.0**
DeepSeek-R1-Distill-Qwen-32B				
CoT	54.4 ± 1.3	75.6 ± 0.9	17.5 ± 1.0	28.0 ± 1.0
π-CoT (Ours)	**82.7 ± 1.0**	**88.2 ± 0.8**	18.4 ± 1.0	**31.1 ± 1.0**

(b) Synthetic in-context multi-hop QA datasets

1.0 F1—a relative gain of 36%. In Table 14(b), we report similar findings using Deepseek-R1-Distill-Qwen-32B as the language model.

Finally, to understand where the gains on PW-S and PW-M come from, we plot accuracy versus the ground-truth difficulty level that comes associated with each question. Gong et al. (2025) defines this difficulty level as the number of hops required to answer the question. According to Figure 4, the accuracy of π-CoT and CoT is similar for questions with low difficulty. However, π-CoT diverges from CoT as the difficulty increases.

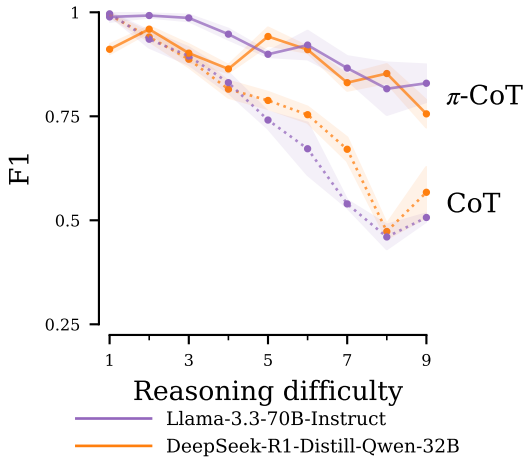

Figure 4: **F1 score vs. difficulty, as measured by number of reasoning steps.** We use the synthetic PW-S benchmark from Gong et al. (2025) and display mean ± 1 standard error. For each model, we evaluate CoT and π-CoT prompting.

Table 15: **Accuracy of CoT with majority voting.** We report mean exact match (EM) and F1 score on a subset of the datasets from Table 14.

#	HotpotQA		2WikiMultiHopQA		MuSiQue		PW-S	
Samples	**EM ↑**	**F1 ↑**	**EM ↑**	**F1 ↑**	**EM ↑**	**F1 ↑**	**EM ↑**	**F1 ↑**
Llama-3.3-70B-Instruct								
1	63.0	79.8	76.8	84.2	49.6	64.3	55.73	75.43
2	63.2	80.3	77.0	84.1	48.4	62.7	54.00	73.95
4	63.4	80.5	76.0	83.4	50.2	63.9	53.93	74.39
8	63.2	80.2	76.0	83.3	51.0	63.8	53.13	73.83
DeepSeek-R1-Distill-Qwen-32B								
1	57.0	74.7	75.8	83.4	45.0	56.4	53.67	74.53
2	57.0	74.8	75.6	83.2	45.6	56.2	54.73	76.14
4	57.0	75.1	76.6	83.4	46.8	57.2	54.47	75.49
8	58.0	75.9	77.4	84.0	49.4	59.3	54.93	75.58

Table 16: Sampling hyperparameters for the results in Table 15.

Model	**Temp.**	**Top-p**	**Rep. Penalty**	**Max Tokens**
Llama-3.3-70B-Instruct	0.6	0.9	1.0	4096
DeepSeek-R1-Distill-Qwen-32B	0.6	0.95	1.0	16384

Since higher difficulty questions require traversing more reasoning paths than lower difficulty questions, our results show that π-CoT is better able to keep track of multi-hop, multi-branch reasoning than CoT.

We compare standard CoT to the simplest inference-time intervention method: CoT with majority voting. We sample 8 evaluations for each question with the hyperparameters in Table 16 and compute the performance when majority voting[9] across 2, 4, and 8 of these samples. On HotpotQA, 2WikiMultiHopQA, and MuSiQue, CoT with majority voting over 4 samples is similar in computational cost to π-CoT (see Table 7). Table 15 shows that the benefits of repeated sampling over single sampling are marginal to none.

[9]We use the majority definition from `https://github.com/EleutherAI/lm-evaluation-harness`.

G Examples of Generated Prolog Queries and Definitions

We show five examples of generated Prolog queries and definitions on HotpotQA(Table 17), 2WikiMultiHopQA(Table 18), MuSiQue(Table 19), and PhantomWiki(Table 20). Examples are randomly chosen.

Question	Query	Target	Definitions
At what age did Cieli di Toscana's singer become blind?	singer("Cieli di Toscana", A1) age_became_blind(A1, A2)	A2	singer(<literal1>, <answer>) -> The singer of <literal1> is <answer>. ; Who is the singer of <literal1>? age_became_blind(<literal1>, <answer>) -> <literal1> became blind at the age of <answer>. ; At what age did <literal1> become blind?
Cooperative Living Organization is located in a city that is the county seat of what county in Florida?	city("Cooperative Living Organization", A1), county_seat(A1, A2)	A2	- city(<literal1>, <answer>) -> The city where <literal1> is located is <answer>. ; What city is <literal1> located in? - county_seat(<literal1>, <answer>) -> <literal1> is the county seat of <answer>. ; What county is <literal1> the county seat of?
Repertoire of Pluecido Domingo appeared in an opera written by whom which was based on a play by William Shakespeare?	opera("Repertoire of Pluecido Domingo", A1), writer(A1, A2), based_on(A1, A3)	A2	- opera(<literal1>, <answer>) -> The opera in which <literal1> appeared is <answer>. ; What opera did <literal1> appear in? - writer(<literal1>, <answer>) -> The writer of the opera <literal1> is <answer>. ; Who wrote the opera <literal1>? - based_on(<literal1>, <answer>) -> The opera <literal1> was based on a play by William Shakespeare <answer>. ; What play by William Shakespeare was the opera <literal1> based on?
In what 2 countries did both X-Large and A Bathing Ape have stores?	x_large_countries(A1), bape_countries(A2), intersection(A1, A2, A3)	A3	- x_large_countries(<answer>) -> X-Large had stores in <answer> countries. ; In what countries did X-Large have stores? - bape_countries(<answer>) -> A Bathing Ape had stores in <answer> countries. ; In what countries did A Bathing Ape have stores? - intersection(<literal1>, <literal2>, <answer>) -> The common countries between <literal1> and <literal2> are <answer>. ; What are the common countries between <literal1> and <literal2>?
Edmund Robert Harris is the principal benefactor of a museum located where ?	museum("Edmund Robert Harris", A1), location(A1, A2)	A2	- museum(<literal1>, <answer>) -> The museum that <literal1> is the principal benefactor of is <answer>. ; What museum is <literal1> the principal benefactor of? - location(<literal1>, <answer>) -> The location of <literal1> is <answer>. ; Where is <literal1> located?

Table 17: 5 examples on generated queries and definitions on HotpotQA.

Question	Query	Target	Definitions
Which film has the director born later, Brutti Di Notte or Bir Türk'E Gönül Verdim?	director("Brutti Di Notte", A1), director("Bir Türk'E Gönül Verdim", A2), date_of_birth(A1, A3), date_of_birth(A2, A4), A3 @> A4 → A5	A5	- director(<literal>, <answer>) -> The director of <literal> is <answer>. ; Who is the director of <literal>? - date_of_birth(<literal>, <answer>) -> The date of birth of <literal> is <answer>. ; When was <literal> born?
Where did M. K. Muthu's father die?	father("M. K. Muthu", A1), place_of_death(A1, A2)	A2	- father(<literal>, <answer>) -> The father of <literal> is <answer>. ; Who is the father of <literal>? - place_of_death(<literal>, <answer>) -> The place of death of <literal> is <answer>. ; Where did <literal> die?
What nationality is Julia Parker (Astrologer)'s husband?	husband("Julia Parker (Astrologer)", A1), nationality(A1, A2)	A2	- husband(<literal>, <answer>) -> The husband of <literal> is <answer>. ; Who is the husband of <literal>? - nationality(<literal>, <answer>) -> The nationality of <literal> is <answer>. ; What is the nationality of <literal>?
Are the directors of both films *The Snake Brothers* and *Kooky* from the same country?	director("The Snake Brothers", A1) director("Kooky", A2), country_of_citizenship(A1, A3), country_of_citizenship(A2, A4), A3 == A4 → A5	A5	- director(<literal>, <answer>) -> The director of <literal> is <answer>. ; Who is the director of <literal>? - country_of_citizenship(<literal>, <answer>) -> The country of citizenship of <literal> is <answer>. ; What is the country of citizenship of <literal>?
What is the place of birth of the director of film *Kiss The Sky (Film)*?	director("Kiss The Sky (Film)", A1), place_of_birth(A1, A2)	A2	- director(<literal>, <answer>) -> The director of <literal> is <answer>. ; Who is the director of <literal>? - place_of_birth(<literal>, <answer>) -> The place of birth of <literal> is <answer>. ; Where was <literal> born?

Table 18: 5 examples of generated queries and definitions on 2WikiMultiHopQA.

Question	Query	Target	Definitions
Who was the mother of the person who found the sacred writings that became the Book of Mormon?	founder_of_book_of_mormon(A1), mother(A1, A2)	A2	- founder_of_book_of_mormon(<answer>) -> The person who found the sacred writings that became the Book of Mormon is <answer>. ; Who found the sacred writings that became the Book of Mormon? - mother(<literal>, <answer>) -> The mother of <literal> is <answer>. ; Who is the mother of <literal>?
Who wrote Turn Me On by the Thinking About You performer?	performer("Thinking About You", A1), writer("Turn Me On", A1, A2)	A2	- performer(<literal>, <answer>) -> The performer of <literal> is <answer>. ; Who performed <literal>? - writer(<literal1>, <literal2>, <answer>) -> The writer of <literal1> by <literal2> is <answer>. ; Who wrote <literal1> by <literal2>?
What did M. King Hubbert's employer announce it was in the process of doing in April 2010?	employer("M. King Hubbert", A1), announcement(A1, "April 2010", A2)	A2	- employer(<literal>, <answer>) -> The employer of <literal> is <answer>. ; Who is the employer of <literal>? - announcement(<literal>, <date>, <answer>) -> <literal> announced it was in the process of doing <answer> on <date>. ; What did <literal> announce it was doing on <date>?
What is the experimental satellite being forerunner to communication satellite of INSAT-4CR's manufacturer called?	manufacturer("INSAT-4CR", A1), experimental_satellite (A1, A2)	A2	- manufacturer(<literal>, <answer>) -> The manufacturer of <literal> is <answer>. ; Who is the manufacturer of <literal>? - experimental_satellite(<literal>, <answer>) -> The experimental satellite being the forerunner to the communication satellite of <literal> is <answer>. ; What is the experimental satellite being the forerunner to the communication satellite of <literal>?
The Socialist Autonomous Province of the city where there were mass executions of Danube Swabian population are located in where?	city_with_mass_executions("Danube Swabian", A1), socialist_autonomous_province(A1, A2), location(A2, A3)	A3	- city_with_mass_executions(<literal>, <answer>) -> The city with mass executions of <literal> population is <answer>. ; What city had mass executions of the <literal> population? - socialist_autonomous_province(<literal>, <answer>) -> The Socialist Autonomous Province of <literal> is <answer>. ; What is the Socialist Autonomous Province of <literal>? - location(<literal>, <answer>) -> <literal> is located in <answer>. ; Where is <literal> located?

Table 19: 5 examples on generated queries and definitions on MuSiQue.

Question	Query	Target	Definitions
How many children does Shelly Reece have?	aggregate_all(count, distinct(child("Shelly Reece", A1)), A2)	A2	- child(<literal>, <answer>) -> The child of <literal> is <answer>. ; Who is the child of <literal>?
How many friends does the friend of the person whose hobby is aerospace have?	hobby(A1, "aerospace"), friend(A1, A2), aggregate_all(count, distinct(friend(A2, A3)), A4)	A4	- hobby(<answer>, <literal>) -> The hobby of <answer> is <literal>. ; Who is the person whose hobby is <literal>? - friend(<literal>, <answer>) -> The friend of <literal> is <answer>. ; Who is the friend of <literal>?
How many children does the mother of the child of the person whose date of birth is 0985-04-02 have?	dob(A1, "0985-04-02"), child(A1, A2), mother(A2, A3), aggregate_all(count, distinct(child(A3, A4)), A5)	A5	- dob(<answer>, <literal>) -> The date of birth of <answer> is <literal>. ; Who is the person whose date of birth is <literal>? - child(<literal>, <answer>) -> The child of <literal> is <answer>. ; Who is the child of <literal>? - mother(<literal>, <answer>) -> The mother of <literal> is <answer>. ; Who is the mother of <literal>?
How many mothers does the friend of the sister of the sister of the child of the parent of the person whose hobby is mineral collecting have?	hobby(A1, "mineral collecting"), parent(A1, A2), child(A2, A3), sister(A3, A4), sister(A4, A5), friend(A5, A6), aggregate_all(count, distinct(mother(A6, A7)), A8)	A8	- hobby(<answer>, <literal>) -> The hobby of <answer> is <literal>. ; Who is the person whose hobby is <literal>? - parent(<literal>, <answer>) -> The parent of <literal> is <answer>. ; Who is the parent of <literal>? - child(<literal>, <answer>) -> The child of <literal> is <answer>. ; Who is the child of <literal>? - sister(<literal>, <answer>) -> The sister of <literal> is <answer>. ; Who is the sister of <literal>? - friend(<literal>, <answer>) -> The friend of <literal> is <answer>. ; Who is the friend of <literal>? - mother(<literal>, <answer>) -> The mother of <literal> is <answer>. ; Who is the mother of <literal>?
How many children does the sibling of the brother of the brother of the sister of Jamal Song have?	sister("Jamal Song", A1), brother(A1, A2), brother(A2, A3), sibling(A3, A4), aggregate_all(count, distinct(child(A4, A5)), A6)	A6	- sister(<literal>, <answer>) -> The sister of <literal> is <answer>. ; Who is the sister of <literal>? - brother(<literal>, <answer>) -> The brother of <literal> is <answer>. ; Who is the brother of <literal>? - sibling(<literal>, <answer>) -> The sibling of <literal> is <answer>. ; Who is the sibling of <literal>? - child(<literal>, <answer>) -> The child of <literal> is <answer>. ; Who is the child of <literal>?

Table 20: 5 examples on generated queries and definitions on PhantomWiki-S.

Question Did John Updike and Tom Clancy both publish more than 15 bestselling novels?
Query bestselling_novels("John Updike", A1), bestselling_novels("Tom Clancy", A2), (A1 @> 15 → B1 = "Yes" ; B1 = "No"), (A2 @> 15 → B2 = "Yes" ; B2 = "No"), (B1 == "Yes" → (B2 == "Yes" → A3 = "Yes" ; A3 = "No") ; A3 = "No")
Definitions bestselling_novels(<literal1>, <answer>) → <literal1> published <answer> bestselling novels. How many bestselling novels did <literal1> publish?
Sub-Query 1: How many bestselling novels did John Updike publish? **Retrieved passages:** *John Updike bibliography*, *Tom Wolfe*, *Toward the End of Time*, *John Updike*, *John Updike* **Answer:** more than 20 **Sub-Query 2:** How many bestselling novels did Tom Clancy publish? **Retrieved passages:** *Duty and Honor*, *Line of Sight (novel)*, *Tom Clancy's EndWar*, *Mike Maden*, *Mark Greaney (novelist)* **Answer:** 17
Notes John Updike published more than 20 bestselling novels. Tom Clancy published 17 bestselling novels. **Prolog Answer:**
Final Answer: Yes

Table 21: One example on the execution trace of a question on HotpotQA.

H Examples of execution traces of π-CoT

We show the full π-CoT workflow on one example from each of HotpotQa(Table 21), 2WikiMultiHopQA(Table 22), and MuSiQue(Table 23). We use the generated predictions from the experiment of Table 1. Examples are randomly chosen.

Question Who is Wisigard's father-in-law?
Query spouse("Wisigard", A1), father(A1, A2)
Definitions spouse(<literal> , <answer>) → The spouse of <literal> is <answer>. ; Who is the spouse of <literal>? father(<literal> , <answer>) → The father of <literal> is <answer>. ; Who is the father of <literal>?
Sub-Query 1: Who is the spouse of Wisigard? **Retrieved passages:** *Wisigard*, *Wisigard*, *Deuteria*, *Deuteria*, *Theudebert I* **Answer:** Theudebert I **Sub-Query 2:** Who is the father of Theudebert I? **Retrieved passages:** *Theudebert of Soissons*, *Theudebert of Soissons*, *Theudebert I*, *Theudebert I*, *Theudebert I* **Answer:** Theuderic I
Notes The spouse of Wisigard is Theudebert I. The father of Theudebert I is Theuderic I. **Prolog Answer:** Theuderic I
Final Answer: Theuderic I

Table 22: One example on the execution trace of a question on 2WikiMultiHopQA.

Question
In what region of the country containing A Luoi is the birthplace of John Phan located?

Query
contains("A Luoi", A1),
birthplace("John Phan", A2),
region(A1, A2, A3)

Definitions
contains(<literal>, <answer>) → <literal> is contained in the country <answer>. ; What country contains <literal>?
birthplace(<literal>, <answer>) → The birthplace of <literal> is <answer>. ; What is the birthplace of <literal>?
region(<literal1>, <literal2>, <answer>) → <literal2> is located in the <answer> region of <literal1>. ; What region of <literal1> is <literal2> located in?

Sub-Query 1: What country contains A Luoi?
Retrieved passages: *A Luoi Camp*, *A Luoi District*, *A Luoi District*, *A Luoi Camp*, *A Luoi District*
Answer: Vietnam

Sub-Query 2: What is the birthplace of "John Phan"?
Retrieved passages: *John Phan*, *Phan Boi Chau*, *Peter C. Phan*, *John Phan*, *Phan Dinh Phung*
Answer: Da Nang, Vietnam

Sub-Query 3: What region of "Vietnam" is "Da Nang, Vietnam" located in?
Retrieved passages: *Da Nang*, *Da Nang Air Base*, *Da Nang University of Economics*, *Hoàng Sa District*, *Da Nang*
Answer: South Central Coast

Notes
A Luoi is contained in the country Vietnam.
The birthplace of John Phan is Da Nang, Vietnam.
Da Nang, Vietnam is located in the South Central Coast region of Vietnam.
Prolog Answer: South Central Coast

Final Answer: South Central Coast

Table 23: 1 example on the execution trace of a question on MuSiQue.