Automation of the Polishing-Etching Process in Metallographic Observation

D. Hashimoto[1,2], Y. Murakami[2], W. Shin[2], K. Nagato[3], Y. Ji[1]
[1][Japan Advanced Institute of Science and Technology, Ishikawa, 923-1292, Japan]
[2][National Institute of Advanced Industrial Science and Technology, Tsukuba, 305-8565, Japan]
[3][The University of Tokyo, 113-8654, Japan]

Correspondence to: [Daijiro Hashimoto] s2520032@jaist.ac.jp

1. Introduction

In recent years, laboratory automation (LA) has garnered significant attention, fundamentally reshaping the landscape of chemical experimentation. Within this trend, the biological and chemical fields are at the forefront of automation. This early adoption is primarily attributed to the relative ease of controlling microfluidic operations and the high degree of standardization already established in their experimental workflows.

To expand the scope of automation, it is essential to extend these technologies into domains previously considered difficult to automate. Due to the inherent physical and technical complexities of the experimental processes themselves, the field of structural materials remains in the early stages of social implementation for automation compared to the biological sciences and related sectors [1].

In structural metal experiments, particularly in microstructural observation, many processes require highly skilled techniques. where the results are highly sensitive to treatment time. Furthermore, these steps often lack fully documented protocols or parameters, leading to a strong reliance on the operator's experience. This has become a major bottleneck hindering automation.

Specifically, in the etching process, the difficulty is compounded by the challenge of controlling minute changes in corrosion volume based on etching exposure time. Additionally, the delay in feedback—where the only immediate means of verifying the success of the etching degree is through visual inspection via optical microscopies, another factor making automation difficult.

To address these issues, this research involves the development of an integrated system that utilizes a Cartesian coordinate robot to automate the etching process and a six-axis collaborative robot to automatically transport samples for microscopic observation.

This report describes the automated etching process and provides an overview of the apparatus currently under development.

2. Structural Metal Preparation

As illustrated in **Fig. 1**, the typical preparation for metal microstructural observation follows a sequence of Sectioning, Mounting, Fine polishing, and Chemical etching prior to Analysing. Chemical etching, the target of automation in this study, involves Immersion in etchant for several seconds to several minutes, followed by Immersion in water and washing under running water to stop the reaction, and finally Drying.

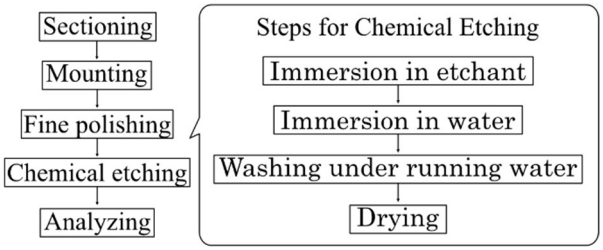

Fig. 1: Flowchart of metallurgical sample preparation

This process generates optical contrast on the sample surface based on microstructural differences by inducing varying degrees of corrosion to reveal grain boundaries and phase variations. However, this stage is often the most critical source of variability. The resulting contrast is highly sensitive to the etching duration; insufficient etching fails to reveal the structure, whereas over-etching results in excessive corrosion of the entire surface. In either case, the image becomes unsuitable for the subsequent Analysing phase.

Currently, in many practical settings, this process is performed manually. However, the impact of even second-by-second operational variations on subsequent automated analysis cannot be ignored. For instance, Brewer et al. pointed out that in area comparison via image analysis, results can deviate significantly from the true values if imaging conditions are inappropriate [2].

In short, the challenges lie in the "high technical difficulty requiring expert skill" and "analytical errors caused by operational variability." Furthermore, in the data-driven autonomous experiments that have gained significant attention in recent years, the quality and quantity of acquired data directly dictate the accuracy of machine learning models. Therefore, the auto-

mation of this process—which eliminates human error and variability while consistently providing homogeneous sample surfaces with high reproducibility—serves as a critical foundational technology for establishing a closed-loop system in metallic materials discovery.

3. Autonomous Process

3.1 System Overview

To address these challenges, we are developing an automated system for the etching process, the overall configuration of which is shown in **Fig. 2**. The apparatus utilizes an affordable CNC machine repurposed as a Cartesian coordinate robot. A custom-built Gripper mounted on the machine transports the Sample between the various modules, including a Pump, a Shower nozzle, and a Blower. The entire system is controlled by an Arduino microcontroller to ensure the precise and repeatable execution of the Steps for Chemical Etching defined in **Fig. 1**.

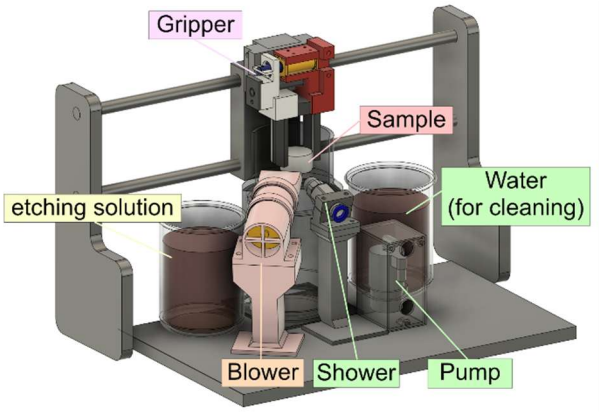

Fig. 2: Overview of the Automatic Etching System

3.2 Etching Process

First, the Sample is held by the Gripper and immersed in the etchant, as shown in **Fig. 3**.

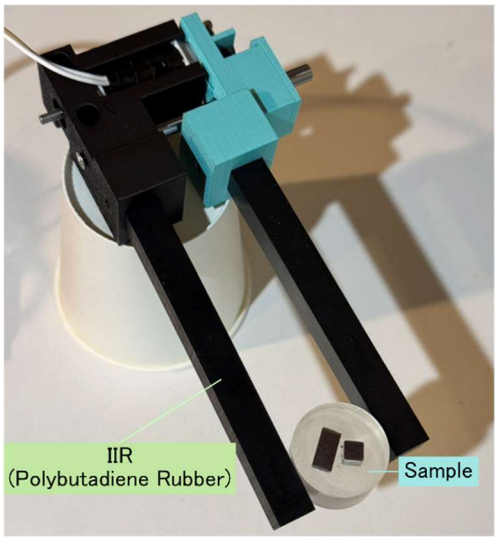

Fig. 3: Detailed view of the Custom-built gripper

The grip section of the Gripper utilizes IIR (butyl rubber), which was selected for its excellent chemical resistance. This material choice prevents corrosion and degradation caused by the Nital solution (a mixture of nitric acid and ethanol) used in this experiment. By ensuring a stable and resistant grip, the apparatus can precisely execute the Immersion in etchant step, maintaining the integrity of the sample-robot interface throughout the repeated etching cycles.

3.3 Rinsing Process

As illustrated in **Fig. 4**, a shower-type rinsing method was adopted. A diaphragm pump is used to draw water from a reservoir and rinse it through a nozzle.
We modified the process from the conventional manual method—which involves immersing the sample in water for immediate rinsing followed by a second wash under running water—to a direct "flow rinsing" approach from the outset, which is better suited for automation. This modification minimizes the time lag between the end of etching and the start of rinsing, while simultaneously improving rinsing efficiency and reducing the volume of waste liquid.

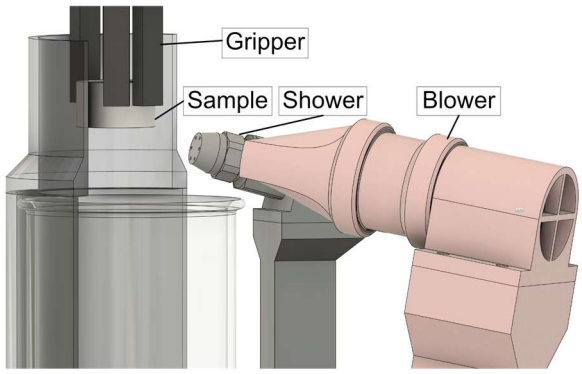

Fig. 4: Operational details of the rinsing and drying processes using the shower nozzle and high-pressure blower

3.4. Drying Process

Finally, a high-pressure Blower is used to dry the Sample surface, as shown in **Fig. 4**. The occurrence of uneven drying or water spots acts as noise in subsequent microscopic observations; therefore, it is essential to ensure their complete removal. The blower utilizes a brushless motor with a maximum speed of 130,000 rpm. By blowing air from a slightly downward horizontal angle relative to the sample surface through a custom nozzle fabricated with a 3D printer, efficient removal of water droplets was achieved.

Acknowledgments

The authors would like to thank Dr. Yasumasa CHINO (AIST) for his valuable advice regarding the metallic experiments.
This work was supported by AIST KAKUSEI project (FY2025).
This work was supported by JST SPRING, Japan Grant Number JPMJSP2102.

References

[1] G. Tom, et. al.. Self-Driving Laboratories for Chemistry and Materials Science. Chem. Rev. 2024, 124, 16, 9633–9732, 2024.

[2] A.W. Brewer, K.A. Erven, G. Krauss. Etching and image analysis of prior austenite grain boundaries in hardened steels. Materials Characterization, Vol. 27, Issue 1, pp. 53-56, 1991.