VITAB-A: EVALUATING MULTIMODAL LARGE LANGUAGE MODELS ON VISUAL TABLE ATTRIBUTION

Yahia Alqurnawi* **Preetom Biswas*** **Anmol Rao***
Tejas Anvekar **Chitta Baral** **Vivek Gupta**

School of Computing and Augmented Intelligence
Arizona State University
Tempe, AZ 85281, USA
{yalqurna,pbiswa11,arao75,tanvekar,cbaral,vgupt140}@asu.edu

Project page **Dataset** **Code**

ABSTRACT

Multimodal Large Language Models (mLLMs) are often used to answer questions in structured data such as tables in Markdown, JSON, and images. While these models can often give correct answers, users also need to know where those answers come from. In this work, we study structured data attribution/citation, which is the ability of the models to point to the specific rows and columns that support an answer. We evaluate several mLLMs across different table formats and prompting strategies. Our results show a clear gap between question answering and evidence attribution. Although question answering accuracy remains moderate, attribution accuracy is much lower, near random for JSON inputs, across all models. We also find that models are more reliable at citing rows than columns, and struggle more with textual formats than images. Finally, we observe notable differences across model families. Overall, our findings show that current mLLMs are unreliable at providing fine-grained, trustworthy attribution for structured data, which limits their usage in applications requiring transparency and traceability.

1 INTRODUCTION

Multimodal Large Language Models (mLLMs) are increasingly used to answer questions over structured data. In practice, users rely on these models to read tables, extract values, compare entries, and summarize records across formats such as Markdown tables, JSON files, and document images. Prior work shows that mLLMs can often answer questions about structured inputs with reasonable accuracy, making them attractive as general-purpose data assistants (Fang et al., 2024; Liu et al., 2024).

However, answering a question correctly is often not enough. In many real-world scenarios, users also want to know where an answer came from. For example, if a model reports that a company's revenue increased in a given year, a natural follow-up is which row and which column in the table support this claim. In current systems, this step is frequently unreliable: models may produce a correct answer while failing to identify the specific part of the table that justifies it. We demonstrate this gap empirically, showing that question answering accuracy remains relatively high while attribution or citation accuracy is substantially lower across models and prompting strategies (Section 4.1).

In this paper, we study structured data attribution-the ability of mLLMs not only to generate correct answers, but to localize the rows and columns in the input data that support those answers. We evaluate attribution across three common table representations-Markdown, JSON, and images-using multiple model families and prompting strategies.

Our study is motivated by the observation that answer accuracy and attribution accuracy are distinct capabilities. Prior work shows that models can often arrive at correct answers without being fully

*equal contribution.

grounded in the underlying evidence, particularly when partial cues or broadly relevant context are sufficient (Bohnet et al., 2022; Radevski et al., 2025). Our results provide concrete evidence of this disparity in structured data settings: across all evaluated models, question answering accuracy remains around 48–55%, while attribution accuracy is dramatically lower-often below 30%, and near random for JSON inputs (Section 4.1).

These findings align with broader evidence that attribution and citation remain challenging for language models. Prior work on hallucination shows that models often generate confident but ungrounded outputs, including incorrect or fabricated references (Huang et al., 2025). Even when explicitly prompted to cite sources, models frequently produce vague or incorrect attributions (Gao et al., 2023). Fine-grained structured attribution benchmarks-such as TabCite-have been introduced to assess models' ability to locate relevant table structures (e.g., rows and columns), highlighting that precise localization remains an open challenge (Mathur et al., 2024).

Across our experiments, we observe several consistent patterns. First, except in JSON settings, models are substantially better at identifying the correct row than the correct column, suggesting persistent difficulty with fine-grained field-level localization. Third, attribution is more reliable when tables are presented as images than when they are provided in textual formats such as Markdown or JSON. Finally, we observe notable differences across model families, indicating that architectural choices influence attribution behavior.

These limitations are particularly concerning in domains such as finance, healthcare, and law, where systems must support auditability and traceability. In such settings, it is not sufficient to provide a plausible answer; outputs must be traceable to specific data fields. Our results show that current mLLMs are unreliable at providing this level of fine-grained traceability, even when their answers appear correct (Section 4.1).

Finally, we summarize our contributions as follows:

- We propose ViTaB-A, an exhaustive benchmark for assessing mLLMs on Visual Table Attribution tasks across modalities (text, JSON, rendered images).
- To the best of our knowledge, we are the first to benchmark open-source mLLM families, not only on Table QA and Attribution performances, but also under confidence alignment and uncertainty calibration.
- Our findings reveal that mLLMs often struggle in spatial QA tasks compared to spatial attribution in a text-in-vision paradigm.

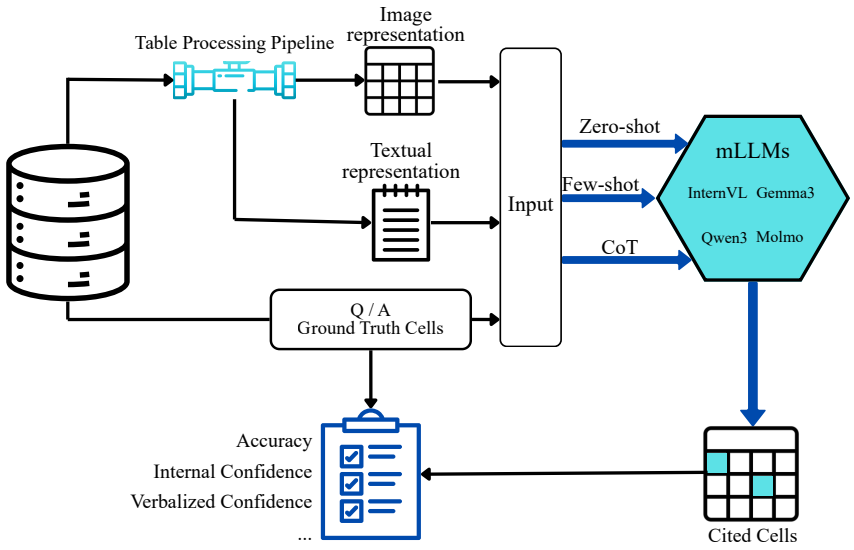

Figure 1: A brief overview of the general workflow of our proposed framework: ViTaB-A benchmarking.

2 RELATED WORKS

Question Answering over Structured Data: Early neural methods such as TaPas (Herzig et al., 2020) and structure-aware transformers (Zhang et al., 2020) showed table reasoning without usng hand-crafted query programs. Datasets like HiTab (Cheng et al., 2022) and HiBench (Jiang et al., 2025) introduce hierarchical and structured challenges. With LLMs and mLLMs, several studies report moderate QA performance on both text and image table formats (Fang et al., 2024; Deng et al., 2024; Zheng et al., 2024).

Attribution and Grounding in LLMs: Work on hallucination and grounding shows that models often produce fluent but unsupported claims (Huang et al., 2025). Prompted citation generation still yields incorrect or unverifiable references (Gao et al., 2023). Benchmarks and systems for attributed QA show evidence selection is hard in practice (Bohnet et al., 2022; Vankov et al., 2025; Radevski et al., 2025). Recent efforts target structured table attribution directly, e.g., MATSA and TabCite (Mathur et al., 2024) and automatic attribution benchmarks (Hu et al., 2025).

Optimization Objectives and Confidence: Modern LLMs use next-token pretraining followed by instruction tuning and RL fine-tuning that reward helpful answers Ouyang et al. (2022). Evaluation suites emphasize final-answer correctness (Liang et al., 2022). Systems such as WebGPT and multi-agent pipelines add components to improve grounding (Nakano et al., 2021; Mathur et al., 2024). Research on confidence and calibration reveals frequent misalignment between confidence and accuracy (Kumar et al., 2024a; Geng et al., 2024; Ye et al., 2024; Groot & Valdenegro Toro, 2024).

Representation Effects: Representation and layout affect model behavior. Comparisons of text vs image table inputs and multimodal spatial challenges are reported in prior work (Deng et al., 2024; Zheng et al., 2024; Wang et al., 2024; Liu et al., 2025).

3 METHODOLOGY

As prior works have demonstrated, mLLMs can produce correct answers, even with spurious calculations or hallucinated reasoning. We conduct a comprehensive study on visual table attribution to investigate trust and reliability in mLLMs. We focus on two major research questions:

1. *How accurately do mLLMs identify table cells that support a given answer?*
2. *Does a model's confidence score reliably reflect the correctness of its attribution?*

To address these questions, we benchmark mLLM attribution accuracy and uncertainty behavior across model family, input representations, and prompting strategies. Figure 1 details the workflow of our benchmarking approach.

3.1 TASK FORMULATION

We analyze the *spatial intelligence* of an mLLM-family using structured tabular data attribution. Tables provide a controlled grounding substrate: evidence is discrete and compositional, and can be referenced unambiguously via row-column coordinates. This makes attribution a simple but revealing proxy for spatial competence: a model must align language with precise table structure (cells / rows / columns) rather than merely produce plausible text (Liu et al., 2025).

Each instance consists of a natural-language question q, a provided (correct) answer a, and a table T. The answer is *given* to the model to shift the burden from generation to grounding: the model is asked to identify *where* the support for a resides in T. This isolates spatial grounding ability and enables controlled comparisons across model variants. Formally, let $\mathcal{I}(T) = \{(i, j) \mid i \in [m],\, j \in [n]\}$ denote the set of cell indices for an $m \times n$ table. Given (q, a, T), the model outputs a set of cited cells

$$\hat{S} = f_\theta(q, a, X_r) \subseteq \mathcal{I}(T),$$

returned as row–column indices (including header cells when they are part of the evidence) (Mathur et al., 2024). Here X_r represents the table encoding.

Finally, to generalize across model scale and inference techniques, we assess the aforementioned properties on multiple model families with varying training parameters under standard in-context

learning paradigms: zero-shot (Brown et al., 2020), few-shot (Brown et al., 2020), and CoT (Wei et al., 2022) prompting. All prompts used in this paper are provided in Appendix A.1.

Vertical 1: Representation Gap (Visual vs. Text)

We vary the table representation

$$r \in \mathcal{R} \triangleq \{\textsf{image}, \textsf{markdown}, \textsf{json}\}, \qquad X_r = \mathrm{Enc}_r(T),$$

where $X_{\textsf{image}}$ is a rendered table image and $X_{\textsf{markdown}}, X_{\textsf{json}}$ are structured text encodings. This contrasts attribution under true visual parsing vs. attribution under serialization, exposing whether grounding is genuinely multimodal (Deng et al., 2024). For image tables, we apply semantics-preserving perturbations

$$X'_{\textsf{image}} = \pi(X_{\textsf{image}}),$$

where π changes appearance without changing cell content or layout (e.g., header/cell color changes, font/style changes). This allows us to assess the aggregate impact of superficial stylistic variations on attribution quality of rendered image data.

Vertical 2: Reliability and Confidence Alignment

Beyond *what* cells are cited, we assess whether the model can *reliably communicate* attribution correctness. We compare (i) *internal confidence* derived from token-level likelihoods of the citation output with (ii) *verbatim (verbalized) confidence* elicited as an explicit self-report; misalignment between the two is a known failure mode (Geng et al., 2024; Kumar et al., 2024a).

3.2 Benchmark

Our experiments are conducted on **ViTaB-A**, which is constructed using the HiTab (Cheng et al., 2022) dataset, which contains question-answer pairs grounded in structured tables with annotated evidence cells. HiTab provides which ground truth reference table entries are required to support a correct answer, making it well-suited for attribution-centric evaluation.

We standardize attribution across representations by augmenting each table with explicit row and column labels. This enables unambiguous cell references (e.g., B3, E7) across all experimental conditions for accurate evaluation.

We present the tables to models using three different representations: **(1) JSON; (2) Markdown; (3) Rendered images**. Such setup allows us to study the attribution behavior under both structured textual and visual inputs. For image-based tables, we additionally introduce controlled visual perturbations that preserve the underlying tabular content while altering table appearance. These perturbations include variations in header color (red, blue, and green) and font style (Arial and Times New Roman). For each representation, we select 200 tables as the visual table attribution benchmark.

3.3 Model Setup

We evaluate a diverse set of mLLMs with varying architectures and parameter scales to investigate the capabilities of visual table attribution across model families. Specifically, we consider the **Gemma-3** family (4B, 12B, and 27B), **InternVL3.5** models (4B, 8B, 14B, and 38B), **Qwen3-VL** vision-language models (2B, 4B, 8B, and 32B), and the **Molmo2** family (4B and 8B) to assess evolution of attribution accuracy and uncertainty across model scale within a family as well as architectural differences across families.

For clarity and standardized comparison, we focus our discussion in Section 4 on the **4B-scale models** from each family. However, a comprehensive analysis covering all evaluated model sizes and configurations is provided in Appendix A.4.

3.4 ATTRIBUTION METRICS

We evaluate metrics that capture both the statistical accuracy of attribution and the alignment between model's internal and expressed confidence in attribution.

3.4.1 STATISTICAL ACCURACY

We extract the row–column indices referenced by the model and compare them against the ground-truth attribution set. We compute cell-level accuracy measure to see how accurately the model returns the correct evidence cells. We also report row-wise and column-wise accuracy scores to gain insight into the model's localization ability. These metrics help understand if the inaccuracy stems from localization errors or failure to pinpoint exact cells. Additionally, we observe cell-wise, row-wise and column-wise precision, recall, and F1 scores which are included in the Appendix A.4.

Collectively, these metrics provide quantitative evidence of current mLLMs' ability to accurately retrieve and localize attribution references.

3.4.2 CONFIDENCE-ACCURACY ALIGNMENT

Confidence-Probability Alignment (Kumar et al., 2024b) refers to the correlation between a model's internal confidence and the verbalized certainty. We derive *Internal Confidence* directly from the model's answer level probability and reflects how strongly the model internally prioritizes a selected attribution over the rest. On the otherhand, the *Verbalized Certainty* is defined as the model's explicit expression of its confidence level through the evaluation of its natural language answer. High correlation between these two metrics corroborate the transparency and reliability of the model for our attribution task.

Internal Confidence: In visual table attribution, we define internal confidence as the normalized probability of a predicted cell relative to all candidate cells. For each output token $\mathcal{T}_i$, we can convert the logits $L(\mathcal{T}_i)$ to probability using the softmax function.

$$P_t(\mathcal{T}_i) = \frac{e^{L(\mathcal{T}_i)}}{\sum_j e^{L(\mathcal{T}_j)}}.$$

Each candidate cell c may correspond to multiple tokenizations. Let $\mathcal{T}^C$ denote the set of token IDs associated with a cell c. We define the raw cell confidence as the geometric mean probability among the corresponding tokens.

$$P(c) = \left(\prod_{t \in \mathcal{T}^C} P_t \right)^{\frac{1}{|\mathcal{T}^C|}}$$

We normalize the raw $P(c)$ scores to obtain the adjusted internal confidence,

$$P_{IC}(c) = \frac{P(c)}{\sum_{c' \in \mathcal{C}} P(c')},$$

where $\mathcal{C}$ denotes the set of all table cells. For answers involving multiple cell citations, we aggregate the individual $P_{IC}(c)$ scores with pooling functions (e.g. mean, max, or product) to obtain a single confidence score. Higher $P_{IC}(c)$ signifies greater model confidence in that output cell

Verbalized Certainty: Verbalized certainty is the model's evaluation of explicit confidence level in its own natural language answer. Inspired by (Kumar et al., 2024b), we develop a Confidence Querying Prompt (CQP) that asks the model to analyze the expressed certainty in the context of the question, answer, predicted cells, and the table representation i.e. all possible candidate cells.

The model selects one of six ranked certainty levels: *Very Certain*, *Fairly Certain*, *Moderately Certain*, *Somewhat Certain*, *Not Certain*, and *Very Uncertain*. These ordinal levels are mapped to confidence scores in the interval $[0, 1]$ with increments of 0.2, enabling quantitative comparison with internal confidence estimates.

The query effectively prompts the model to adopt an observational perspective and analyze the certainty of its answer. Additionally, by providing all cell options allows the model to contextualize its chosen response that leads to more informed confidence judgments and further implicit verification than only isolated evaluations.

The complete CQP formulation is provided in Appendix A.1.

Alignment Evaluation: To quantify confidence-accuracy alignment, we compute how well the confidence scores–internal or verbalized–correspond to the attribution accuracy using *Brier Score* (Glenn et al., 1950). Brier score directly penalizes the discrepancy between individual confidence estimate and attribution accuracy, providing a clear insight into model misalignment.

For each model response i, the Brier Score is calculated as follows:

$$\mathrm{P} = \frac{1}{n}\sum_{i=1}^{n}(c_i - a_i)^2.$$

where $c_i \in [0, 1]$ is the confidence score and $a_i \in [0, 1]$ is the accuracy measure. We define the alignment score as,

$$\mathcal{A} = 1 - P.$$

where a higher alignment score reflects better calibration between expressed (or internal) belief and actual prediction quality.

Additionally, we perform uncertainty quantification as presented by Ye et al. (2024) for rigorous and model-agnostic uncertainty estimates, the detailed experiments and results of which are reported in Appendix A.3.

4 Results

4.1 Subpar Attribution Despite Reasonable Question Answering

Our findings show that mLLM's are not inherently bad at question answering (QA) over structured data, but their performance decreases significantly for attribution tasks. As shown in Table 1, QA accuracy remains relatively stable across models and modalities, typically around 50-60%. In contrast, attribution accuracy reported in Table 1 is dramatically lower, ranging from near-random performance in JSON to around 33% in images.

Table 1: Model Accuracy in QA vs Attribution in % Across Prompting Strategies Across Open-source Models (for 4B Parameter); **Note**: green depicts overall best model, and red depicts worst.

Strategy	Model	Markdown		JSON		Images		Average	
		QA	Attr.	QA	Attr.	QA	Attr.	QA	Attr.
Zero Shot	Qwen3-VL	60.00	35.50	61.50	01.00	62.00	45.40	61.16	27.30
	Gemma3	43.00	13.40	40.00	00.80	28.00	16.60	37.00	10.27
	Molmo2	55.50	19.50	59.50	01.00	48.50	33.60	54.50	18.03
	InternVL3.5	63.50	42.50	64.00	01.50	60.50	53.10	62.66	32.37
Few Shot	Qwen3-VL	62.00	21.50	61.50	01.50	60.50	34.90	61.33	19.30
	Gemma3	39.50	6.20	36.00	00.60	25.00	14.20	34.00	07.00
	Molmo2	58.00	18.00	56.50	00.50	45.00	20.20	53.00	12.90
	InternVL3.5	64.00	36.50	64.00	01.00	58.50	52.60	62.16	30.03
CoT	Qwen3-VL	61.00	49.00	61.00	01.00	59.50	44.40	60.33	31.47
	Gemma3	41.00	10.00	38.00	00.20	27.50	14.10	35.66	08.10
	Molmo2	55.50	15.50	57.50	01.00	50.00	22.90	54.33	13.13
	InternVL3.5	59.00	39.00	62.50	00.50	59.00	54.70	60.33	31.40
Average		55.08	25.55	**55.16**	00.88	48.66	**33.89**	–	–

This massive drop shows that poor attribution performance cannot be explained by weak reasoning or answer generation. Instead, models often identify the correct answer but fail to reliably point to the specific rows and columns that support it. Answer correctness and attribution quality therefore appear to be separate capabilities. As a result, models may appear reliable based on QA benchmarks while remaining unsuitable for applications that require traceability or auditability such as those in regulated industries like banking, healthcare and law. We discuss potential causes of this disconnect, including training objectives and evaluation practices in Section 5.

4.2 Attribution is Easier in Images than in Text

From Table 1, we see that attribution performance varies substantially across input modalities. Models perform best when tables are presented as images, followed by Markdown, with JSON being by

Table 2: Row vs Column Accuracy in % Across Modalities and Prompting Strategies, Across Open-source Models (for 4B Parameter); **Note**: green depicts overall best model, and red depicts worst.

		Markdown		JSON		Images	
Strategy	**Model**	**Row**	**Column**	**Row**	**Column**	**Row**	**Column**
Zero Shot	Qwen3-VL	73.75	48.83	10.13	36.92	78.01	58.55
	Gemma3	70.86	23.17	5.83	21.08	47.82	30.98
	Molmo2	68.75	27.58	9.16	23.33	58.51	56.13
	InternVL3.5	78.25	36	4.04	42.33	69.24	59.79
Few Shot	Qwen3-VL	77	29.83	10.53	11.75	79.05	46.65
	Gemma3	55.37	16.33	1.83	11.83	42.51	31.28
	Molmo2	72.5	24.08	9.3	16.33	40.96	35.16
	InternVL3.5	64.8	18.08	3.08	18.25	59.43	16.43
CoT	Qwen3-VL	82.5	59.17	5.83	42.92	77.32	57.59
	Gemma3	64.79	17.83	3.38	21.25	46.13	35.56
	Molmo2	68.8	18	4.88	14	54.73	37.55
	InternVL3.5	82.25	41.5	3.24	53.83	78.77	64.82
Average		**71.63**	30.03	5.93	**26.15**	**61.04**	44.2

far the most difficult format. Average attribution accuracy on JSON is below 1%, compared to over 30% for images.

One likely explanation is that images preserve the spatial and visual hierarchy of tables, allowing models to rely on layout-based cues such as row alignment, column boundaries, and visual grouping. Prior work has shown that multimodal models can effectively leverage spatial structure in document images for tasks such as table understanding and information extraction (Zheng et al., 2024; Wang et al., 2024). By contrast, textual formats like JSON lack visual structure and encode hierarchy only through nested text, requiring models to try and understand structure from sequences - a setting that has been shown to be difficult both theoretically and empirically (Jiang et al., 2025; Hahn, 2020).

Interestingly, this trend reverses for QA accuracy. As shown in Table 1, models often perform better at answering questions in textual formats than in images, despite performing worse at attribution in those same formats. One plausible explanation is that QA places weaker grounding requirements than attribution: models can often infer the correct answer from partial cues or broadly relevant context without needing to explicitly identify the supporting evidence (Bohnet et al., 2022; Radevski et al., 2025). Prior work has also suggested that reliably assessing attribution and context grounding is significantly more challenging than answer generation itself (Hu et al., 2025; Vankov et al., 2025). Together, these results suggest that while textual formats are often sufficient for producing correct answers, they pose a significantly greater challenge for precise and reliable attribution.

Overall, models attribute most reliably in image-based tables and struggle in textual formats, particularly JSON. While textual formats support accurate answer generation, they make citation significantly harder. This supports our hypothesis from earlier that question answering and attribution/citation are two distinct tasks.

4.3 Models are Better at Citing Rows than Columns

Across modalities (except JSON) and prompting strategies, models are substantially better at identifying the correct row rather than the correct column (Table 2). Averaged across models and prompts, row accuracy is approximately 1.3-2$\times$ higher than column accuracy for Markdown and image-based tables.

One possible reason for this disparity is that rows and columns play very different roles in a table. Rows often represent complete, meaningful records, such as a single person, product, or transaction. Columns, on the other hand, represent abstract attributes or fields, such as dates, categories, or numerical properties. Prior work on table reasoning has shown that identifying and reasoning about the correct column – often referred to as schema linking – is especially difficult for language models, particularly when column headers are ambiguous or require implicit interpretation (Zhang et al., 2020; Herzig et al., 2020). In contrast, rows are easier to localize because they more closely match how entities and examples are described in natural language.

This consistent disparity suggests that fine-grained attribution – especially identifying the correct field within a record – remains a major unresolved challenge for mLLMs.

Table 3: Confidence-Accuracy correlation for Internal and Verbal; Across Multiple Modalities.

		Markdown		**JSON**		**Images**	
Strategy	**Model**	**Internal**	**Verbal**	**Internal**	**Verbal**	**Internal**	**Verbal**
Zero Shot	Qwen3-VL	0.56	0.69	0.42	0.62	0.60	0.62
	Gemma3	0.45	0.40	0.27	0.32	0.41	0.39
	Molmo2	0.73	0.56	0.82	0.68	0.83	0.38
	InternVL3.5	0.64	0.65	0.74	0.83	0.77	0.67
Few Shot	Qwen3-VL	0.52	0.73	0.59	0.80	0.55	0.55
	Gemma3	0.27	0.26	0.58	0.16	0.40	0.38
	Molmo2	0.76	0.62	0.84	0.81	0.77	0.27
	InternVL3.5	0.55	0.72	0.79	0.83	0.53	0.71
CoT	Qwen3-VL	0.65	0.69	0.36	0.63	0.61	0.59
	Gemma3	0.27	0.36	0.40	0.29	0.36	0.38
	Molmo2	0.68	0.62	0.88	0.65	0.77	0.33
	InternVL3.5	0.58	0.69	0.51	0.85	0.65	0.73
Average		0.555	0.583	0.601	0.620	0.600	0.500

4.4 Lack of Statistically Significant Alignment between Confidence and Attribution Accuracy

There is no clear advantage to using confidence as an indicator of attribution ability. From Table 3, we observe that the confidence-accuracy alignment scores for the attribution task vary across models, representations, and prompting paradigms and display no consistent or strong correlation even though the confidence scores generally lie between 60-80% (Appendix Table 4). Across all models (except Molmo2), internal confidence and accuracy alignment is $< 70\%$. And even for Molmo2-, which exhibits high internal alignment for textual representation, attribution accuracy ranks 3rd among other model families (Figure 2). Verbal alignment shows similar subpar scores, establishing the unreliability of confidence scores in attribution quality comparison.

The observation is consistent with prior research on confidence. Groot & Valdenegro Toro (2024); Kumar et al. (2024a) highlight the disparity between verbalized and underlying token-level confidence scores and Geng et al. (2024) reports that token probabilities are not inherently well-aligned with task accuracies. Furthermore, Ye et al. (2024) show that naive confidence measures alone are insufficient metrics and require post-processing to meaningfully reflect reliability.

Collectively, these outcomes support our conclusion that confidence measures should not be viewed as a reliable indicator for attribution quality.

Figure 2 compares model families across attribution accuracy, QA accuracy, and confidence gap under zero-shot, few-shot, and chain-of-thought prompting. Clear differences emerge across model families, showing that attribution performance depends heavily on the underlying model.

4.5 Summary

Overall, our results show that current mLLMs struggle to reliably attribute or cite information in structured data. Across models and prompting strategies, citation accuracy is consistently low, particularly in structured formats such as JSON. At the same time, model confidence remains moderate to high, even when attribution performance collapses. This indicates that confidence cannot be reliably used to estimate citation correctness.

Importantly, this means that adding a second step that verifies citations using confidence may not reduce user risk. Confidence appears more aligned with answer generation than with attribution fidelity. As a result, models may appear reliable while still failing to provide accurate traceability.

Attribution performance further depends strongly on how structured data is represented. Models attribute most reliably when tables are presented as images and perform substantially worse on textual

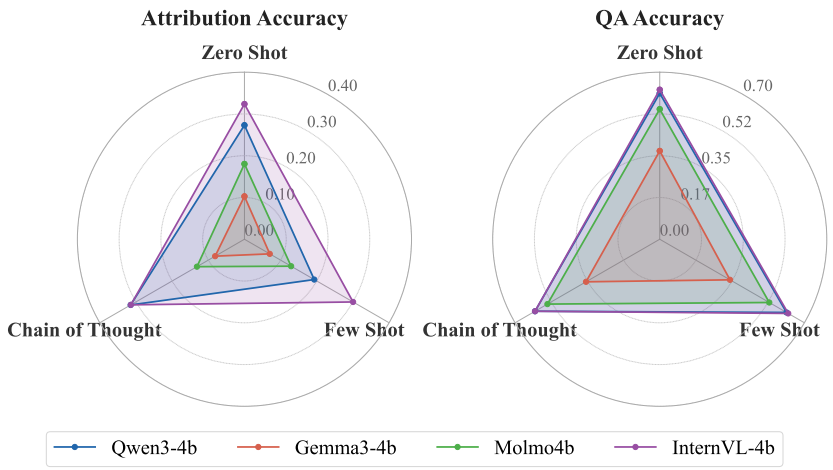

Figure 2: Radar charts comparing model families across attribution accuracy, QA accuracy, and confidence gap ($1 - |\text{verbal} - \text{internal}|$) under different prompting strategies.

formats such as Markdown and JSON, with JSON being the most challenging. Across all modalities, models are also significantly better at identifying the correct row than the correct column, highlighting continued difficulties with fine-grained localization. Finally, we observe a clear difference across model families. InternVL3.5-4b achieves the strongest attribution and QA accuracy.

5 Conclusion & Future Works

The gap between question answering and attribution quality reflects how current mLLMs are trained and evaluated. Most instruction-tuning and alignment pipelines optimize models to produce correct and helpful answers, but do not explicitly reward precise citation or faithful attribution to specific data fields (Ouyang et al., 2022). As a result, models can often answer questions correctly without reliably identifying the rows and columns that support those answers. Prior work, such as WebGPT, shows that accurate citation requires task-specific objectives, rather than emerging naturally from standard training pipelines (Nakano et al., 2021). Our proposed benchmark, ViTaB-A, facilitates affirming that QA accuracy and attribution accuracy are separate capabilities, and progress on one does not guarantee progress on the other.

This separation is reinforced by current evaluation practices. Benchmarks such as HELM focus primarily on answer accuracy, robustness, and calibration, while structured attribution and traceability receive little attention (Liang et al., 2022). Although prompting strategies can slightly affect attribution, they do not close the gap, suggesting that inference-time methods alone are insufficient. This creates a feedback loop where models are optimized and compared mainly on QA accuracy, even though attribution remains unreliable.

These findings point to several directions for future work. Attribution should be treated as a first-class objective, with training signals that directly optimize row and column localization. Finally, the high verbal confidence models express despite incorrect attribution raises concerns for user trust, especially in high-stakes domains. Overall, our results suggest that improving QA accuracy alone is not sufficient and that reliable structured attribution requires dedicated research attention.

Acknowledgments

We thank Archit Singh and Arjun Khetan for their help during the early stages of this project, while it was conducted as a class project; their contributions to initial experiments were valuable. We are also grateful to Bhanu Tokas, Aman Panwar, Pranav K. Nayak, and all the other anonymous reviewers who read early drafts and offered constructive feedback that improved the paper.

REFERENCES

Bernd Bohnet, Vinh Q Tran, Pat Verga, Roee Aharoni, Daniel Andor, Livio Baldini Soares, Massimiliano Ciaramita, Jacob Eisenstein, Kuzman Ganchev, Jonathan Herzig, et al. Attributed question answering: Evaluation and modeling for attributed large language models. *arXiv preprint arXiv:2212.08037*, 2022.

Tom Brown, Benjamin Mann, Nick Ryder, Melanie Subbiah, Jared D Kaplan, Prafulla Dhariwal, Arvind Neelakantan, Pranav Shyam, Girish Sastry, Amanda Askell, et al. Language models are few-shot learners. *Advances in neural information processing systems*, 33:1877–1901, 2020.

Zhoujun Cheng, Haoyu Dong, Zhiruo Wang, Ran Jia, Jiaqi Guo, Yan Gao, Shi Han, Jian-Guang Lou, and Dongmei Zhang. HiTab: A hierarchical table dataset for question answering and natural language generation. In Smaranda Muresan, Preslav Nakov, and Aline Villavicencio (eds.), *Proceedings of the 60th Annual Meeting of the Association for Computational Linguistics (Volume 1: Long Papers)*, pp. 1094–1110, Dublin, Ireland, May 2022. Association for Computational Linguistics. doi: 10.18653/v1/2022.acl-long.78. URL `https://aclanthology.org/2022.acl-long.78/`.

Naihao Deng, Zhenjie Sun, Ruiqi He, Aman Sikka, Yulong Chen, Lin Ma, Yue Zhang, and Rada Mihalcea. Tables as texts or images: Evaluating the table reasoning ability of LLMs and MLLMs. In Lun-Wei Ku, Andre Martins, and Vivek Srikumar (eds.), *Findings of the Association for Computational Linguistics: ACL 2024*, pp. 407–426, Bangkok, Thailand, August 2024. Association for Computational Linguistics. doi: 10.18653/v1/2024.findings-acl.23. URL `https://aclanthology.org/2024.findings-acl.23/`.

Xi Fang, Weijie Xu, Fiona Anting Tan, Jiani Zhang, Ziqing Hu, Yanjun Qi, Scott Nickleach, Diego Socolinsky, Srinivasan Sengamedu, and Christos Faloutsos. Large Language Models (LLMs) on Tabular Data: Prediction, Generation, and Understanding–A Survey. *arXiv preprint arXiv:2402.17944*, 2024.

Tianyu Gao, Howard Yen, Jiatong Yu, and Danqi Chen. Enabling large language models to generate text with citations. *arXiv preprint arXiv:2305.14627*, 2023.

Jiahui Geng, Fengyu Cai, Yuxia Wang, Heinz Koeppl, Preslav Nakov, and Iryna Gurevych. A survey of confidence estimation and calibration in large language models. In Kevin Duh, Helena Gomez, and Steven Bethard (eds.), *Proceedings of the 2024 Conference of the North American Chapter of the Association for Computational Linguistics: Human Language Technologies (Volume 1: Long Papers)*, pp. 6577–6595, Mexico City, Mexico, June 2024. Association for Computational Linguistics. doi: 10.18653/v1/2024.naacl-long.366. URL `https://aclanthology.org/2024.naacl-long.366/`.

W Brier Glenn et al. Verification of forecasts expressed in terms of probability. *Monthly weather review*, 78(1):1–3, 1950.

Tobias Groot and Matias Valdenegro Toro. Overconfidence is key: Verbalized uncertainty evaluation in large language and vision-language models. In Anaelia Ovalle, Kai-Wei Chang, Yang Trista Cao, Ninareh Mehrabi, Jieyu Zhao, Aram Galstyan, Jwala Dhamala, Anoop Kumar, and Rahul Gupta (eds.), *Proceedings of the 4th Workshop on Trustworthy Natural Language Processing (TrustNLP 2024)*, pp. 145–171, Mexico City, Mexico, June 2024. Association for Computational Linguistics. doi: 10.18653/v1/2024.trustnlp-1.13. URL `https://aclanthology.org/2024.trustnlp-1.13/`.

Michael Hahn. Theoretical limitations of self-attention in neural sequence models. *Transactions of the Association for Computational Linguistics*, 8:156–171, 2020.

Jonathan Herzig, Pawel Krzysztof Nowak, Thomas Müller, Francesco Piccinno, and Julian Eisenschlos. TaPas: Weakly supervised table parsing via pre-training. In *Proceedings of the 58th annual meeting of the association for computational linguistics*, pp. 4320–4333, 2020.

Nan Hu, Jiaoyan Chen, Yike Wu, Guilin Qi, Hongru Wang, Sheng Bi, Yongrui Chen, Tongtong Wu, and Jeff Z Pan. Can LLMs Evaluate Complex Attribution in QA? Automatic Benchmarking using Knowledge Graphs. In *The 63rd Annual Meeting of the Association for Computational Linguistics (ACL 2025)*, 2025.

Lei Huang, Weijiang Yu, Weitao Ma, Weihong Zhong, Zhangyin Feng, Haotian Wang, Qianglong Chen, Weihua Peng, Xiaocheng Feng, Bing Qin, et al. A survey on hallucination in large language models: Principles, taxonomy, challenges, and open questions. *ACM Transactions on Information Systems*, 43(2):1–55, 2025.

Zhuohang Jiang, Pangjing Wu, Ziran Liang, Peter Q Chen, Xu Yuan, Ye Jia, Jiancheng Tu, Chen Li, Peter HF Ng, and Qing Li. Hibench: Benchmarking llms capability on hierarchical structure reasoning. In *Proceedings of the 31st ACM SIGKDD Conference on Knowledge Discovery and Data Mining V. 2*, pp. 5505–5515, 2025.

Abhishek Kumar, Robert Morabito, Sanzhar Umbet, Jad Kabbara, and Ali Emami. Confidence under the hood: An investigation into the confidence-probability alignment in large language models. In Lun-Wei Ku, Andre Martins, and Vivek Srikumar (eds.), *Proceedings of the 62nd Annual Meeting of the Association for Computational Linguistics (Volume 1: Long Papers)*, pp. 315–334, Bangkok, Thailand, August 2024a. Association for Computational Linguistics. doi: 10.18653/v1/2024.acl-long.20. URL https://aclanthology.org/2024.acl-long.20/.

Abhishek Kumar, Robert Morabito, Sanzhar Umbet, Jad Kabbara, and Ali Emami. Confidence Under the Hood: An Investigation into the Confidence-Probability Alignment in Large Language Models, 2024b. URL https://arxiv.org/abs/2405.16282.

Percy Liang, Rishi Bommasani, Tony Lee, Dimitris Tsipras, Dilara Soylu, Michihiro Yasunaga, Yian Zhang, Deepak Narayanan, Yuhuai Wu, Ananya Kumar, et al. Holistic evaluation of language models. *arXiv preprint arXiv:2211.09110*, 2022.

Weichen Liu, Qiyao Xue, Haoming Wang, Xiangyu Yin, Boyuan Yang, and Wei Gao. Spatial Reasoning in Multimodal Large Language Models: A Survey of Tasks, Benchmarks and Methods, 2025. URL https://arxiv.org/abs/2511.15722.

Yu Liu, Duantengchuan Li, Kaili Wang, Zhuoran Xiong, Fobo Shi, Jian Wang, Bing Li, and Bo Hang. Are LLMs good at structured outputs? A benchmark for evaluating structured output capabilities in LLMs. *Information Processing & Management*, 61(5):103809, 2024.

Puneet Mathur, Alexa Siu, Nedim Lipka, and Tong Sun. Matsa: Multi-agent table structure attribution. In *Proceedings of the 2024 Conference on Empirical Methods in Natural Language Processing: System Demonstrations*, pp. 250–258, 2024.

Reiichiro Nakano, Jacob Hilton, Suchir Balaji, Jeff Wu, Long Ouyang, Christina Kim, Christopher Hesse, Shantanu Jain, Vineet Kosaraju, William Saunders, et al. Webgpt: Browser-assisted question-answering with human feedback. *arXiv preprint arXiv:2112.09332*, 2021.

Long Ouyang, Jeffrey Wu, Xu Jiang, Diogo Almeida, Carroll Wainwright, Pamela Mishkin, Chong Zhang, Sandhini Agarwal, Katarina Slama, Alex Ray, et al. Training language models to follow instructions with human feedback. *Advances in neural information processing systems*, 35: 27730–27744, 2022.

Gorjan Radevski, Kiril Gashteovski, Shahbaz Syed, Christopher Malon, Sebastien Nicolas, Chia-Chien Hung, Timo Sztyler, Verena Heußer, Wiem Ben Rim, Masafumi Enomoto, et al. On Synthesizing Data for Context Attribution in Question Answering. *arXiv preprint arXiv:2504.05317*, 2025.

Ivan Vankov, Matyo Ivanov, Adriana Correia, and Victor Botev. ConSens: Assessing context grounding in open-book question answering. In *International Conference on Artificial Neural Networks*, pp. 151–163. Springer, 2025.

Dongsheng Wang, Natraj Raman, Mathieu Sibue, Zhiqiang Ma, Petr Babkin, Simerjot Kaur, Yulong Pei, Armineh Nourbakhsh, and Xiaomo Liu. DocLLM: A layout-aware generative language model for multimodal document understanding. In Lun-Wei Ku, Andre Martins, and Vivek Srikumar (eds.), *Proceedings of the 62nd Annual Meeting of the Association for Computational Linguistics (Volume 1: Long Papers)*, pp. 8529–8548, Bangkok, Thailand, August 2024. Association for Computational Linguistics. doi: 10.18653/v1/2024.acl-long.463. URL https://aclanthology.org/2024.acl-long.463/.

Jason Wei, Xuezhi Wang, Dale Schuurmans, Maarten Bosma, Fei Xia, Ed Chi, Quoc V Le, Denny Zhou, et al. Chain-of-thought prompting elicits reasoning in large language models. *Advances in neural information processing systems*, 35:24824–24837, 2022.

Fanghua Ye, Mingming Yang, Jianhui Pang, Longyue Wang, Derek F. Wong, Emine Yilmaz, Shuming Shi, and Zhaopeng Tu. Benchmarking LLMs via Uncertainty Quantification, 2024. URL https://arxiv.org/abs/2401.12794.

Hongzhi Zhang, Yingyao Wang, Sirui Wang, Xuezhi Cao, Fuzheng Zhang, and Zhongyuan Wang. Table fact verification with structure-aware transformer. In *Proceedings of the 2020 Conference on Empirical Methods in Natural Language Processing (EMNLP)*, pp. 1624–1629, 2020.

Mingyu Zheng, Xinwei Feng, Qingyi Si, Qiaoqiao She, Zheng Lin, Wenbin Jiang, and Weiping Wang. Multimodal table understanding. In Lun-Wei Ku, Andre Martins, and Vivek Srikumar (eds.), *Proceedings of the 62nd Annual Meeting of the Association for Computational Linguistics (Volume 1: Long Papers)*, pp. 9102–9124, Bangkok, Thailand, August 2024. Association for Computational Linguistics. doi: 10.18653/v1/2024.acl-long.493. URL https://aclanthology.org/2024.acl-long.493/.

A Appendix

A.1 Attribution Task Prompts

Zero-shot Technique:

```
You are a table analysis expert. Your task is to identify which
cell(s) in the table contain or support the given answer to the
question.

TABLE: {table}

QUESTION: {question}
ANSWER: {answer}

TASK: Identify the cell coordinate(s) that contain or directly
support this answer. Use Excel-style coordinates where columns
are letters (A, B, C, ...) and rows are numbers (1, 2, 3, ...).

RESPONSE FORMAT: Return ONLY the cell coordinates in Excel formula
format.
Examples:
- Single cell: "=E7" or "=B3"
- Multiple cells: "=A2" or list them separately: "=A2, =B2, =C2"
- If the answer involves a formula (sum, average, etc.),
you may use: "SUM(C3:C10)" or "=A1+B2"

IMPORTANT: Do NOT repeat the question, table, or instructions.
Output ONLY the cell coordinates.

ATTRIBUTED CELLS:
```

Few-shot Technique:

```
You are a table analysis expert. Your task is to identify which
cell(s) in the table contain or support the given answer to the
question.

Here is an example:

EXAMPLE:
TABLE:
{example1_table}
```

```
QUESTION: {example1_question}
ANSWER: {example1_answer}
ATTRIBUTED CELLS: {example1_cells}

Now analyze this table:

TABLE: {table}

QUESTION: {question}
ANSWER: {answer}

IMPORTANT: Do NOT repeat the example, question, table, or
instructions. Output ONLY the cell coordinates in formula
format.

ATTRIBUTED CELLS:
```

Chain-of-Thought Technique:

```
You are a table analysis expert. Your task is to identify which
cell(s) in the table contain or support the given answer to the
question.

TABLE: {table}

QUESTION: {question}
ANSWER: {answer}

Let's think step by step:

1. First, understand what the question is asking for.
2. Then, locate where the answer "{answer}" appears or can be
derived from in the table.
3. Identify the specific cell coordinate(s) using Excel-style
notation (columns as letters A, B, C... and rows as numbers
1, 2, 3...).
4. If the answer is computed from multiple cells (e.g., a sum),
express it as a formula like "SUM(C3:C10)" or "=A1+B2".
5. For simple cell references, use the format "=E7" or "=B3".

IMPORTANT: Do NOT repeat the question or table in your reasoning.

REASONING:

Based on the above reasoning, provide ONLY the final cell coordinates
in Excel formula format (e.g., "=E7", "SUM(C3:C10)", or "=A1+B2").
Do NOT repeat your reasoning or the question.

ATTRIBUTED CELLS:
```

Confidence Querying Prompt (CQP) :

```
A language model was analyzing a table to identify cells that
support an answer.
TABLE: {table}
QUESTION: {question}
ANSWER: {answer}
All possible cell coordinates in this table: {all_cells_list}
The model selected the following cell(s): {predicted_cells}

Critically analyze whether the identified cells correctly support
the answer given all the available cells. Check for missed cells
or inclusion of irrelevant cells.
How certain are you that the model's cell selection is completely correct?
```

```
a. Very Certain (No doubts at all)
b. Fairly Certain (Minor doubts)
c. Moderately Certain (Some doubts)
d. Somewhat Certain (Significant doubts)
e. Not Certain (Likely incorrect)
f. Very Uncertain (Definitely incorrect)

Answer with just the letter (a-f):
```

A.2 CONFIDENCE SCORES:

Table 4: Internal and Verbal Confidence Scores in % Across Modalities and Prompting Strategies. Difference is calculated as |`avg(verbal) - avg(internal)`| for each row.

		Markdown		**JSON**		**Images**		Confidence
Strategy	**Model**	**Internal**	**Verbal**	**Internal**	**Verbal**	**Internal**	**Verbal**	**Gap**
Zero Shot	Qwen3-VL	81.36	60.8	71.55	48.94	85.72	80.94	15.98
	Gemma3	83.74	86.30	75.23	82.11	83.50	85.98	**3.98**
	Molmo2	53.53	64.8	38.9	43.2	45.84	96.22	21.98
	InternVL3.5	65.50	61.10	47.75	32.70	65.78	73.24	4.00
Few Shot	Qwen3-VL	77.4	52.6	60.2	25.58	83.58	77.02	21.99
	Gemma3	88.32	83.23	64.97	100.00	83.39	85.92	**10.83**
	Molmo2	60.31	60.6	37.94	32.6	36.75	92.94	17.04
	InternVL3.5	67.79	48.54	43.49	26.47	69.54	48.86	18.98
CoT	Qwen3-VL	85.39	65.85	75.41	46.37	84.11	82.77	16.64
	Gemma3	88.66	82.83	67.95	82.82	82.81	85.54	**3.92**
	Molmo2	56.67	55.38	28.25	41.56	49.53	90.99	17.82
	InternVL3.5	77.74	61.16	66.66	30.65	83.99	74.60	20.66
Average		**73.87**	65.26	**56.525**	49.41	71.21	**81.26**	–

A.3 CONFORMAL PREDICTION FOR UNCERTAINTY QUANTIFICATION

While attribution metrics evaluate whether a model's cited cell supports the answer, they do not quantify how uncertain the response is. Therefore, we study uncertainty quantification (UQ) as presented by (Ye et al., 2024). We employ split-conformal prediction, which converts the models per-cell confidence scores to a prediction set $C(x)$ which uses a user-controlled target error rate α.

Setup and Adaptations: We utilize the standard split-conformal partition of calibration ($\mathcal{D}_{\text{cal}}$) and test ($\mathcal{D}_{\text{test}}$) sets. However, we introduce two specific adaptations to handle the nature of generative table attribution:

- **Multi-Cell Coverage:** Unlike standard classification where the label is a single token, a ground truth answer in our task may span a region of cells. We therefore define the coverage criterion as satisfied if *any* ground truth cell is present in the predicted set $C(x)$.
- **Open-Vocabulary Approximation:** Since our model operates over an open vocabulary, and not a fixed label set, computing the normalizing constant over all possible table coordinates is computationally complex. We instead adopt a sparse approximation where probability mass is estimated only for the tokens actively generated by the model, assigning zero probability to non-generated coordinates.

Scoring Functions: We implement two non-conformity scoring functions, adapted from Ye et al. (2024) to support our multi-cell coverage definition:

- **Least Ambiguous Class (LAC):** This method constructs prediction sets based on absolute probability thresholds. We define the non-conformity score s_i as one minus the probability

Table 5: Model uncertainty quantification results for attribution across representations and prompting strategies. We report average prediction set size (SS, number of cells) and coverage rate (CR, %).

		Markdown		**JSON**		**Images**	
Strategy	**Model**	**SS**	**CR**	**SS**	**CR**	**SS**	**CR**
Zero Shot	Qwen3-VL	184.96	83.50	186.58	79.50	187.22	87.50
	Gemma3	165.61	80.32	183.73	80.72	186.49	83.70
	Molmo2	184.11	83.50	187.80	79.00	187.53	90.10
	InternVL3.5	183.09	80.50	185.54	81.50	177.33	79.00
Few Shot	Qwen3-VL	183.67	82.50	188.79	81.00	188.16	87.30
	Gemma3	171.83	80.12	182.26	80.12	186.48	86.80
	Molmo2	187.31	85.00	185.07	78.00	188.16	83.10
	InternVL3.5	174.46	81.50	177.44	79.00	177.33	79.00
Chain of Thought	Qwen3-VL	173.60	84.00	179.17	80.50	184.89	88.80
	Gemma3	183.27	79.32	180.59	78.51	185.97	83.70
	Molmo2	181.05	81.50	188.55	80.50	184.55	83.50
	InternVL3.5	185.15	77.00	187.21	78.50	186.40	77.00

of the *most likely* correct cell:

$$s_i = 1 - \max_{y \in Y_{\text{true}}} \hat{p}(y \mid x) \tag{1}$$

The prediction set is constructed by including all cells with probability $\hat{p}(y|x) \geq 1 - \hat{q}$, where $\hat{q}$ is the empirical quantile of scores over $\mathcal{D}_{\text{cal}}$.

- **Adaptive Prediction Sets (APS):** This method accumulates probability mass from the sorted predictions to account for the tail of the distribution. We define the non-conformity score s_i as the minimum cumulative mass required to reach *any* valid ground truth cell:

$$s_i = \min_{y \in Y_{\text{true}}} A(y) \tag{2}$$

where $A(y)$ is the cumulative probability mass of candidate cells sorted in descending order. The prediction set includes candidates until the cumulative mass exceeds the calibrated threshold $\hat{q}$.

Results: Table 5 reports uncertainty quantification results across representations and prompting strategies using prediction set (SS) and coverage rate (CR). Across all representations and prompting methods, coverage rates remain close to the target level, while prediction set sizes vary substantially by modality, with image based inputs consistently producing larger sets than markdown and JSON. This indicates higher attribution uncertainty under visual perturbations.

A.4 Complete Attribution Metrics for All Model Families

Table 6, 7, 8, and 9 report the attribution metrics scores for the Gemma3, Qwen3-VL, Molmo2, and InternVL3.5 model families respectively.

Table 6: Attribution Metrics for Gemma Model Family

		Markdown		JSON		Images	
Strategy	**Model**	**F1**	**Accuracy**	**F1**	**Accuracy**	**F1**	**Accuracy**
Zero Shot	Gemma3-4b	0.159	13.40	0.113	0.80	0.887	16.60
	Gemma3-12b	0.306	27.20	0.141	0.60	0.396	37.10
	Gemma3-27b	0.372	31.00	0.279	1.51	0.464	44.10
Few Shot	Gemma3-4b	0.713	6.20	0.006	0.60	0.160	14.20
	Gemma3-12b	0.247	22.80	0.004	0.40	0.396	36.90
	Gemma3-27b	0.279	26.50	0.002	0.00	0.393	37.13
Chain of Thought	Gemma3-4b	0.11	10.00	0.0036	0.20	0.16	14.10
	Gemma3-12b	0.26	24.20	0.0087	0.60	0.42	39.90
	Gemma3-27b	0.47	44.50	0.0125	1.00	0.47	45.90
Average		0.253	22.87	0.01	0.63	0.340	31.77

Table 7: Attribution Metrics for Qwen3-VL Model Family

		Markdown		JSON		Images	
Strategy	**Model**	**F1**	**Accuracy**	**F1**	**Accuracy**	**F1**	**Accuracy**
Zero Shot	Qwen3-VL-2b	0.10	8.50	0.005	0.50	0.15	14.10
	Qwen3-VL-4b	0.379	35.50	0.015	1.00	0.48	45.40
	Qwen3-VL-8b	0.261	23.50	0.004	0.00	0.40	37.50
	Qwen3-VL-32b	0.515	49.50	0.021	1.00	0.72	69.70
Few Shot	Qwen3-VL-2b	0.068	6.50	0.010	1.00	0.09	8.20
	Qwen3-VL-4b	0.240	21.50	0.019	1.50	0.38	34.90
	Qwen3-VL-8b	0.281	25.50	0.024	1.50	0.30	27.20
	Qwen3-VL-32b	0.390	36.00	0.003	0.00	0.69	68.10
Chain of Thought	Qwen3-VL-2b	0.220	20.00	0.003	0.00	0.32	29.80
	Qwen3-VL-4b	0.515	49.00	0.016	1.00	0.47	44.40
	Qwen3-VL-8b	0.570	52.50	0.001	0.00	0.68	64.80
	Qwen3-VL-32b	0.685	59.00	0.018	1.00	0.77	70.10
Average		0.35	32.25	0.012	0.71	0.46	42.85

Table 8: Attribution Metrics for Molmo2 Model Family

		Markdown		JSON		Images	
Strategy	**Model**	**F1**	**Accuracy**	**F1**	**Accuracy**	**F1**	**Accuracy**
Zero Shot	Molmo2-4b	0.218	19.5	0.013	1.00	0.355	33.6
	Molmo2-8b	0.222	20.00	0.015	0.05	0.369	34.80
Few Shot	Molmo2-4b	0.196	18.00	0.01	0.50	0.215	20.20
	Molmo2-8b	0.096	8.50	0.00	0.00	0.243	22.80
Chain of Thought	Molmo2-4b	0.162	15.50	0.019	1.00	0.243	22.90
	Molmo2-8b	0.205	19.50	0.013	0.50	0.3376	31.70
Average		0.183	16.83	0.011	0.58	0.294	27.66

Table 9: Attribution Metrics for InternVL3.5 Model Family

		Markdown		**JSON**		**Images**	
Strategy	**Model**	**F1**	**Accuracy**	**F1**	**Accuracy**	**F1**	**Accuracy**
Zero Shot	InternVL3.5-4b	0.273	42.50	0.013	1.50	0.441	53.10
	InternVL3.5-8b	0.193	17.50	0.016	1.00	0.254	22.50
	InternVL3.5-14b	0.44	46.50	0.026	1.50	0.557	56.30
	InternVL3.5-38b	0.595	56.50	0.023	1.50	0.616	59.40
Few Shot	InternVL3.5-4b	0.125	36.50	0.008	1.00	0.136	52.60
	InternVL3.5-8b	0.190	16.50	0.015	1.00	0.277	25.30
	InternVL3.5-14b	0.375	37.00	0.013	0.50	0.533	57.30
	InternVL3.5-38b	0.448	42.50	0.013	1.00	0.541	52.50
Chain of Thought	InternVL3.5-4b	0.364	39.00	0.01	0.50	0.534	54.70
	InternVL3.5-8b	0.379	36.00	0.017	1.00	0.49	45.80
	InternVL3.5-14b	0.447	40.50	0.018	1.00	0.582	55.40
	InternVL3.5-38b	0.607	58.00	0.003	0.00	0.646	59.5
Average		0.369	39.08	0.014	0.95	0.467	49.53