DEXOS: Hand Exoskeleton System for Teaching Robot Dexterous Manipulation In-The-Wild

Hao-Shu Fang, Arthur Hu, Branden Romero, Edward Adelson, Pulkit Agrawal

Massachusetts Institute of Technology
USA
Contact: fhs@mit.edu

***Abstract*—We introduce DEXOS, a novel passive hand exoskeleton system designed to collect robots dexterous manipulation in-the-wild, without needing a real robot. Traditional teleoperation systems for high DoF dexterous hands are usually expensive and limited by the lack of intuitive feedback to human teleoperator. DEXOS allows human users to directly control a robot's dexterous hand through a passive exoskeleton system, where the human fingers are mechanically connected to the robot fingers, controlling the robot hand while also feeling the force applied to the robot hand seamlessly. By optimizing the kinematic configuration and providing high force transparency, human users can control a robot's hand just like controlling their own hand. Equipped with precise position encoders and tactile sensors, DEXOS captures high-fidelity dexterous manipulation data, facilitating manipulation learning without the need for costly hardware or careful engineering. We evaluate the system across multiple dexterous tasks, demonstrating its capability to accomplish highly dexterous, contact-rich tasks and its potential to scale the collection of high-quality demonstration data. Learning experiments show significant improvements in the performance-time ratio compared to teleoperation method, making DEXOS a powerful tool for advancing robot dexterity.**

I. Introduction

Dexterous manipulation remains one of the most challenging tasks in robotics. Although advances in robotic learning systems have improved certain aspects of manipulation, teaching robots to perform dexterous tasks still presents significant challenges. Among all the challenges, data is the main bottleneck. Current data collection approaches, including simulation, learning from videos, and teleoperation, each face limitations that reduce their effectiveness in real-world applications.

Real-world robot data, compared to simulation [5, 16, 3, 2, 32, 11] and videos [4, 15, 17, 23, 13, 19, 25], is more preferable, as there is no domain gap during training and testing. For example, simulation usually requires careful asset engineering, setting up the simulated environments, and mitigating the sim-to-real gap, and video demonstrations lack the detailed contact information necessary for learning fine-manipulation skills.

To get real-world robot data, teleoperation [18, 27, 8, 6] is a promising solution. But for dexterous manipulation, it faces issues of scalability and intuitiveness. Most teleoperated systems lack haptic feedback to the human teleoperator, making it difficult for users to naturally control robots, especially in contact-rich tasks. Although some research proposed to provide human users with more force feedback during teleoperation [21, 30], those systems usually require extra sensors and actuators, and is hard to provide accurate feedback.

To overcome these limitations, we present DEXOS, a novel hand exoskeleton system designed specifically for teaching robots dexterous manipulation tasks in-the-wild. Unlike traditional teleoperation setups, DEXOS introduces a passive exoskeleton that links human hand movements to robotic hand movements through mechanical linkages, enabling direct control of robotic hands with precise kinematic mapping. This system offers a unique advantage by maintaining force transparency, allowing users to experience real-time, high-resolution haptic feedback through the robotic hand, thus addressing one of the key limitations in current teleoperation systems. Additionally, DEXOS is much lower cost than those systems and easier to setup, which allows for efficient, large-scale data collection across diverse manipulation tasks.

DEXOS is built with several key features to facilitate intuitive interaction and effective learning. The system ensures kinematic transparency, so users can operate the robotic hand within its full workspace without interference. Force feedback from the robotic hand is transmitted accurately to the user's fingers, enabling precise manipulation and grip control. Furthermore, DEXOS incorporates a tactile sensor system, allowing the collection of detailed force and contact information during interaction. This makes DEXOS an ideal platform for gathering rich data to train robots in tasks requiring high precision and dexterity.

In this work, we demonstrate the utility of DEXOS by applying it to a variety of dexterous manipulation tasks, such as drilling, lamp installation, box packaging, and bottle opening. Through comprehensive experiments, we show that DEXOS offers superior control compared to traditional teleoperation systems and significantly improves data collection throughput. We built DEXOS for Eyesight Hand [20] and showed that the data collected by DEXOS can greatly facilitate the performance of dexterous manipulation policy. We also built DEXOS with extra degrees of freedom and showed that it can have various forms and accomplish many different dexterous tasks. In summary, this work lays the groundwork for scalable, real-world data collection in robotic dexterous manipulation, pushing the boundaries of what is possible with current learning-based approaches.

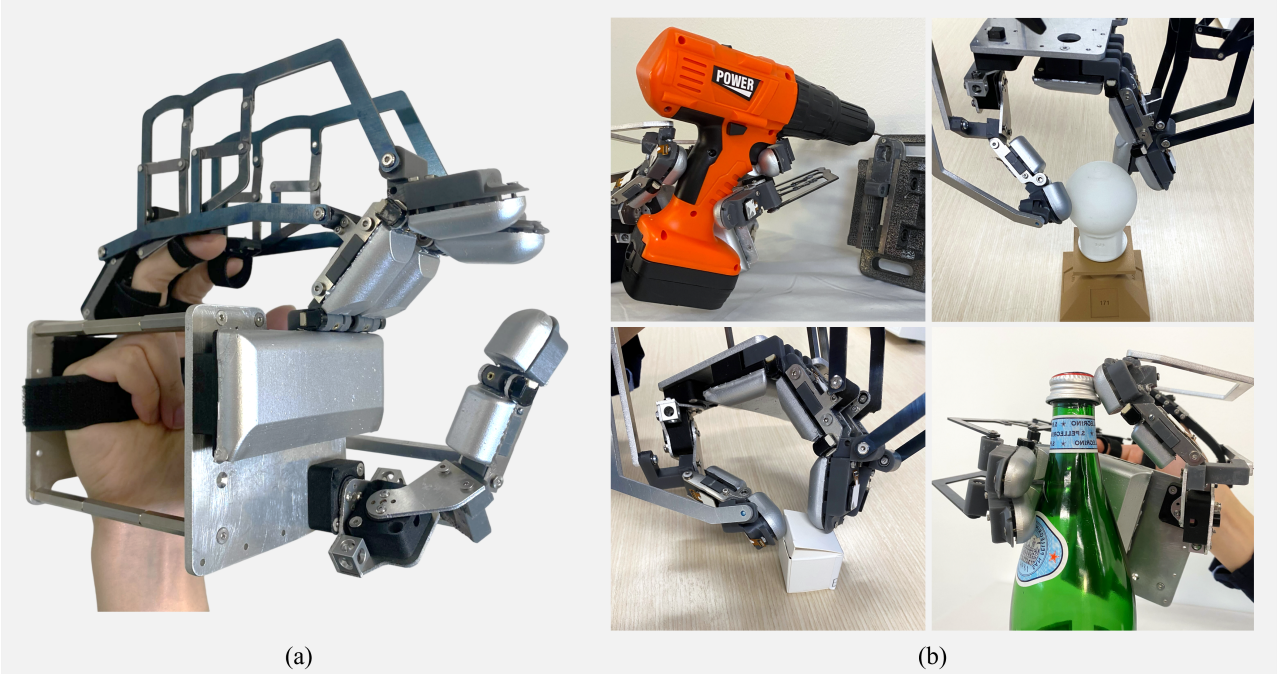

Fig. 1: (a) Picture of DEXOS. (b) DEXOS is used to collect demonstrations in-the-wild on various dexterous tasks: drilling, lamp installation, box packaging, and bottle opening.

II. Related Work

A. Teleoperation for Dexterous Manipulation

Teleoperation is the most common method of collecting demonstrations for dexterous manipulation today. Previous works have used webcam, VR devices, or haptic gloves as the input device for teleoperating manipulation tasks [14, 18, 8, 6, 27]. However, most vision-based teleoperation works do not have haptic feedback or use vibration feedback which is unintuitive. On the other hand, existing haptic feedback devices are expensive, and usually only provide force on fingertips. DEXOS provides a novel, low-cost solution to control a robotic hand with immersed haptic feedback, other than teleoperation.

B. Hand exoskeleton

Hand exoskeletons have been widely explored in both robotics and medical fields, primarily for rehabilitation, force augmentation, and haptic feedback [28, 12, 29, 1, 10]. These systems aim to extend the capabilities of human operators or assist individuals with disabilities by enhancing motor control and providing precise feedback. In recent years, the focus has expanded to include advanced haptic feedback systems for teleoperation and robot learning [21]. Most of the existing work focused on teleoperation settings, failing to address the scalability, intuitive control, and force transparency required for dexterous robotic manipulation in-the-wild. Our work, DEXOS, bridges this gap by offering a passive exoskeleton that provides kinematic mirroring and force transparency, specifically tailored for large-scale data collection and dexterous robotic manipulation in real-world environments.

C. Low-cost hardware for robot learning

Due to the requirements for large amounts of robotic demonstration data, low-cost hardware has attracted attention in the past few years. One line of work is low-cost teleoperation systems [31, 26], which are typically composed of a leader and a follower system where the correspondence is achieved with joint mapping. Another line of work builds a simple data collection tool that does not require robot hardware [9, 7, 24, 22, 25]. The benefit is that the data can be collected in the wild and the challenges of operating at scale are reduced. Our work pushed this direction to the next stage of manipulation tasks with dexterous hands.

III. Hardware Design

Unlike most previous exoskeletons, which are designed to provide humans with external forces through actuators, our design focuses on the opposite approach: a passive exoskeleton actuated by the human to drive the robotic hand. To this end, several design targets are emphasized:

- **Kinematic transparency:** The exoskeleton should allow users to move freely in the robot hand's workspace, without causing collision of the device to human hand.
- **Workspace constraints:** For the workspace beyond robot hand's reach-ability, the exoskeleton should provide constraints to human hand, such that the data collected by humans will always be valid for robot to directly imitate.
- **Kinematic mirroring:** When the user configures the human hand to a specific posture within the robot's workspace, the system should drive the robot to a similar posture. Such mirroring allows intuitive control of robot hand without extra training.

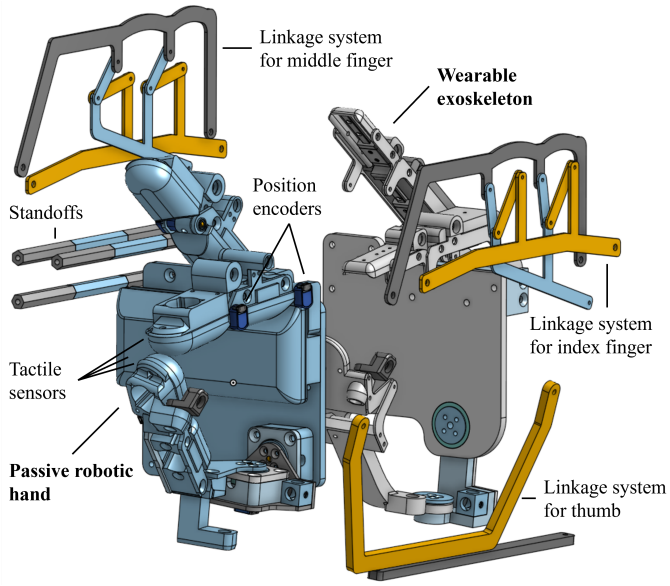

Fig. 2: Exploded view of the DEXOS system.

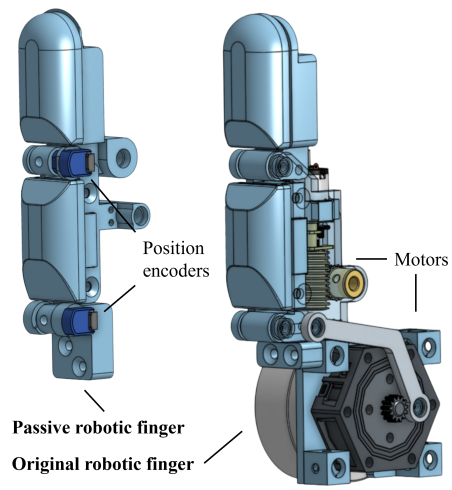

Fig. 3: Comparison of the DEXOS finger (left) and the EyeSight Hand finger (right). While the DEXOS finger is passively driven, it is kinematically identical to the EyeSight Hand finger. To get joint state information, each joint of the DEXOS finger is equipped with an angular encoder.

- **Dynamic transparency:** The device should have low inertia/friction so that humans can move their hand without internal forces caused by finger movement. This reduces users' effort. More importantly, users can sense the feedback force from the environment more accurately without the influence of internal force.
- **Force transparency:** The system should have a mechanism to properly transmit the force applied on the robot finger to the human finger, and vice versa to allow users to apply forces to the environment through the robot finger. The force applied to different phalanges of the robot should be transmitted to corresponding parts on human hand for intuitive haptic feedback.

According to these design choices, we introduce the kinematics and linkages design of the hand, followed by electronics and tactile sensor details.

A. Overview of DEXOS system

The DEXOS system consists of two main components: the passive robotic hand and the wearable exoskeleton for the human hand. The robotic hand is connected to the wearable exoskeleton via a linkage system. The force applied to the wearable exoskeleton by human fingers is transmitted to the robotic hand, driving its movement. Similarly, the force exerted on the robotic hand during interaction with the environment is transmitted to the human hand through the linkage and exoskeleton attachments. Following this philosophical idea, there can be different implementations for DEXOS. In this paper, we explore two design choices: one Figure 2 provides an overview of our system.

B. Kinematics

For the passive robotic hand, we adopted the EyeSight hand [20] and removed all motors and driving linkages. It features 7 fully actuated degrees of freedom (DoF): 2 for the index and middle fingers, respectively, and 3 for the thumb. Both the index and middle fingers have a 1 DoF MCP joint and a PIP joint. The thumb has a 2 DoF TM joint and an IP joint. We added a position encoder to each revolute joint to measure the joint angle. In the original robotic hand, each joint has a specific limit position enforced by the driving linkage. To ensure that our passive robotic hand maintains the same working range as the original, we added hard joint limits. Figure 3 shows the comparison between the passive and original fingers.

For the wearable exoskeleton, we designed it to match the robotic hand's kinematic chain, allowing the robotic hand to be driven using simple parallel 4-bar linkage structures. One modification we made was to extend the length between the two axes of the TM joint of the thumb to prevent collisions with the user's thumb when wearing the exoskeleton. The thumb length was then extended accordingly to ensure that the position of the IP joint remained unaffected in the kinematic chain. Figure 5 (b) shows the difference between the TM joint on the exoskeleton and the robot hand thumb.

C. Joint Alignment

For the wearable exoskeleton, the design goal is to align the exoskeleton's kinematic chain parallel to the human finger's kinematic chain, ensuring maximum range of motion for the human fingers. This alignment allows users to intuitively control the robotic hand. However, achieving this is challenging because the distance between the MCP and PIP joints on the exoskeleton is fixed and closely matches the length of the human proximal phalanx. As a result, whether the exoskeleton overlays the human finger or vice versa, interference tends to occur when the finger bends.

To accommodate the human fingers, the joints are positioned to the side of the finger and connected with 1mm spring steel. To provide additional support and create an attachment

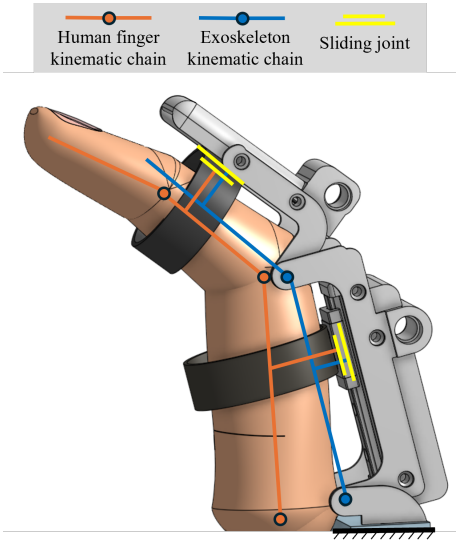

Fig. 4: The kinematics of the wearable exoskeleton match the kinematics of the robotic finger. The sliding joints serve as compensatory mechanisms, ensuring that despite the differences in size, shape, and range of motion between the human hand and the robotic finger, the exoskeleton can still perform synchronized and natural movements.

point for the human phalanges, the linkages are curved around the back of the finger and connected to a 3D-printed finger backing. The human fingers are then attached to the finger backing through a linear slider, which compensates for relative sliding between the exoskeleton and the finger. An illustration is given in Figure 4.

D. Linkage Design

The robotic hand is driven by the exoskeleton through a linkage system. Since the wearable exoskeleton shares the same kinematics as the robotic hand, the linkage system is designed using multiple parallel 4-bar linkages for simplicity.

For both index and middle finger, the linkage system is illustrated in Figure 5 (a). It consists of two parts, the first being two serial 4-bar linkages to drive the two finger phalanges. In the first 4-bar linkage, the fixed distance between the MCP joint of the exoskeleton and that of the robotic hand serves as the virtual fixed frame. The exoskeleton's proximal phalanx acts as the input link, and the robot's proximal phalanx acts as the output link. To prevent the coupler from colliding with the robotic hand during movement, we designed it with a curved shape. With this 4-bar linkage system, the distance between the PIP joints of the robot and the exoskeleton is also fixed, allowing us to build the second 4-bar linkage for the middle phalanx similarly.

A critical issue with this linkage system is that it could enter a contra-parallelogram state, where the output link moves in the opposite direction when the input link crosses the singularity. In a typical parallelogram 4-bar system, the workspace is constrained to less than 180 degrees to avoid singularity. However, the robotic finger requires a larger workspace. To address this, we built the second part of the linkage system to ensure both 4-bar linkages work in parallel. This second part consists of an auxiliary linkage, connected to the couplers of the two 4-bar linkages by three parallel links. This forms a parallel 5-bar linkage with a 360-degree workspace. Parallelism is maintained by transmitting motion from one coupler, through the auxiliary linkage, to the other coupler. Finally, we optimized the shapes of the linkage system to avoid collisions between the connecting rivets and the linkages.

For the thumb finger, the linkage system is shown in Figure 5 (b). The TM joint consists of two perpendicular axes, and the abduction joint of the wearable exoskeleton and passive robotic hand are co-axial. This allows us to control two degrees of freedom using a single 4-bar linkage that drives the flexion axis of the TM joint. Additionally, the IP joint of the thumb is not parallel to the two existing axes of motion. To control this new degree of freedom, a second spatial 4-bar linkage is introduced. The coupler is connected to the first 4-bar linkage via two perpendicular joints in series, enabling independent control of the third degree of freedom while maintaining the constraints of the initial system.

E. Tactile Sensor

Following the EyeSight hand [20], we equipped our passive robotic hand with full-hand tactile sensing capability using the GelSim(ple) sensor, a camera-based tactile sensor. This full-hand tactile sensor significantly enhances the range of modalities we can collect. For more details about the GelSim(ple) tactile sensor, we refer readers to EyeSight Hand [20].

F. Electronics

For each revolute joint on the passive robotic hand, we equipped it with an iC-MH16 12-bit angular encoder, providing a resolution of 1.5e-3 rad. An RS-485 Interface IC is used for output signals. We customized a PCB to collect all RS-485 signals and transmit them to the computer via USB. The PCB also provides power to the tactile sensors. For the camera system in the tactile sensor, we used IMX219 color camera modules with fisheye lenses. The signals from multiple cameras are collected using Arducam 8MP*4 quadrascopic camera bundle kits.

G. In-the-wild Data Collection

Our DEXOS system serves as a convenient tool for quickly collecting dexterous manipulation data in the wild. It can be connected to AirExo [9] or use IMU/SLAM method like DobbE [22]/UMI [7] to collect global position and map to a robot arm. During data collection process, we can stream the global position, hand joint angle, the tactile images, in-hand camera image and/or global image.

IV. EXPERIMENTS

A. Hardware Capacity

We evaluated the performance of the DEXOS system across several critical metrics: force output, workspace coverage, and finger speed. Additionally, we compared these metrics with the performance of the real robotic hand [20] to demonstrate the DEXOS system's effectiveness in mirroring real-hand capabilities. The results are summarized in Table I.

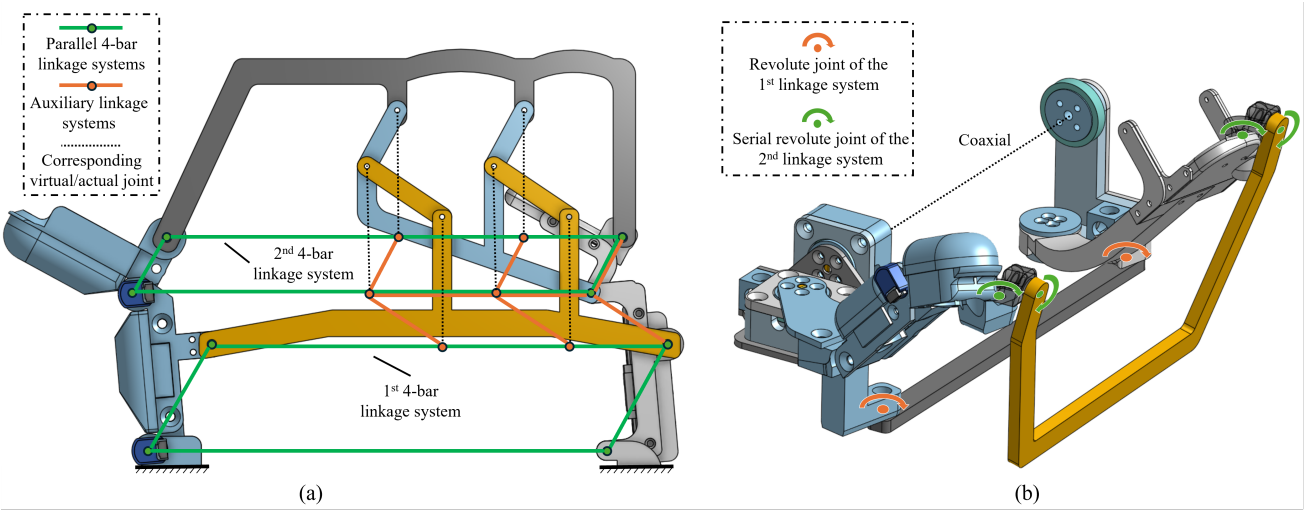

Fig. 5: (a) Annotated view of the 4-bar linkages coupling the index fingers of the robot and exoskeleton hands together (b) Annotated view of the rotary linkage system coupling the thumbs of the robot and exoskeleton hands together

TABLE I: Comparison of Force, Workspace, and Speed between DEXOS System and Robotic Hand

Metric	Category	DEXOS System	Robotic Hand
Max Force (N)	Thumb	∼70	56
	Index	∼60	54
	Middle	∼60	54
Workspace (Degrees)	MCP Joint	110	120
	PIP Joint	105	105
	TM joint (flexion)	75	75
	TM joint (abduction)	90	90
	IP joint	65	65
Max Speed (rad/s)	MCP Joint	35	37
	PIP Joint	15	5
	TM joint (flexion)	17	32
	TM joint (abduction)	12	35
	IP	9	5

a) Force Output: The DEXOS system transmits force effectively between the human hand and the robotic hand. We measured a peak force of around **60 N** at the index and middle fingers, and around **70 N** at the thumb, which is comparable to the robotic hand's force capabilities, and sufficient for manipulating various objects. The force of the exoskeleton is also related to the human subject that wearing it, and we observe that the linkage system can transmit the force with high efficiency.

b) Workspace Coverage: The DEXOS system mirrors the workspace of the robotic hand, achieving nearly full articulation for dexterous manipulation tasks. The MCP joint on both systems covers around **110-120 degrees** of flexion, while the PIP joints allow for **105 degrees**. The thumb's motion on the DEXOS system fully matches the robotic hand's workspace on all three joints.

c) Finger Speed: Finger speed was measured to assess how quickly the DEXOS system responds to human input. The MCP joint achieves a maximum angular velocity of **35 rad/s** on the DEXOS system, slightly lower than the **37 rad/s** of the robotic hand. The PIP and IP joints on the DEXOS system reach velocities of **15 rad/s** and **9 rad/s**, respectively, which are 2-3 times faster than those of the robotic hand. However, the TM joint of the DEXOS system is slower. It is important to note that users need to intentionally move their fingers to achieve these high speeds with DEXOS, but in most manipulation tasks, operating at such speeds would be unnecessary and could result in unstable control.

B. User Study

To evaluate the performance and usability of the DEXOS system, we conducted a structured user study with four participants. Each participant was tasked with performing four dexterous manipulation tasks using three different control modalities:

1) **DEXOS System:** Participants controlled the robotic hand via the DEXOS system, allowing for direct physical interaction through a haptic feedback loop.
2) **Teleoperation:** A teleoperation system based on a UR3 robotic arm, a trakSTAR electromagnetic hand tracking system and an EyeSight hand was used as a baseline for comparison, where participants manipulated the robot hand with visual feedback but without haptic feedback. We refer readers to [20] for more details on hand tracking system.
3) **Direct Human Performance:** As a control, participants performed the tasks using their own hands to provide an upper-bound reference for performance.

Each participant completed five trials for each task under all modalities, resulting in a total of 240 trials. Each trial began with a brief explanation and practice of the task. The metric is the task throughput given a fixed amount of time. When the task execution exceeds 3 minutes, we would regard it as a failure.

C. Task Specification

a) Drilling: Participants grabbed a drill, moved it to a screw, and tightened the screw. This task evaluates precision in tool handling, ability to apply appropriate rotational force, and

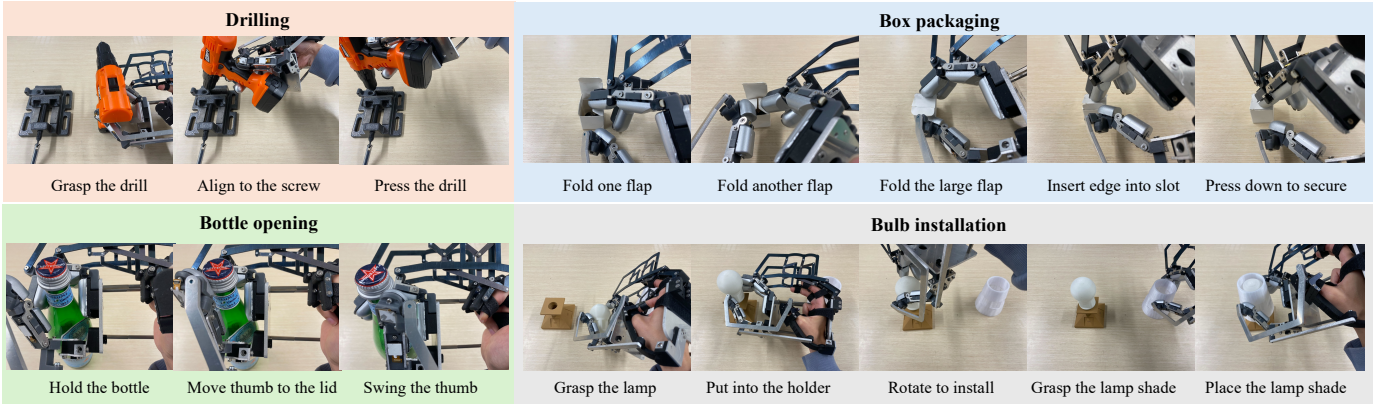

Fig. 6: Illustration of evaluation tasks. **Drilling**: the user must pick up a drill standing upright on a table, the user then inserts the drill bit into an M2 screw head and tightens it by actuating the drill. **Bottle opening**: with the bottle placed within the workspace of the hand, the user grasps the bottle and then uses the thumb to unscrew the cap. **Box Packaging:** the user approaches the an open box, and folds the side flaps before closing the top flap by folding the the securing flap into the box. **Bulb installation**: the task is composed of three parts, a lamp base, a light bulb, and a light shade. The user picks and screws the light bulb into the lamp base before placing the light shade over the entire assembly.

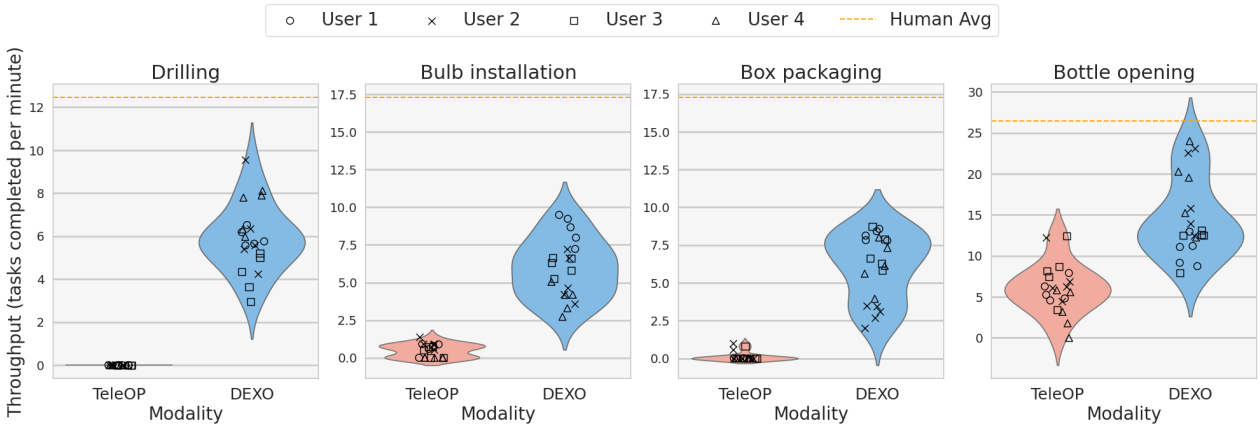

Fig. 7: Comparison of task throughput of the drilling, bulb installation, box packaging and bottle opening task with TeleOP system, DEXOS and human hand.

maintain steady grip. The challenge is ensuring force transmission and grip control, emphasizing the need for accurate joint torque feedback.

b) Bulb Installation: Participants picked up a bulb, inserted it into a socket, rotated it to screw the bulb in, and placed a lampshade on top. This task tests fine rotational control, grip adjustment, and precision in insertion tasks.

c) Box Packaging: Participants folded the flaps of a small box: two small flaps first, followed by folding the larger flap over them. Then they need to insert its edge into the slot along the box's opening and press down to secure it. This task requires coordinated multi-finger manipulation and feedback when folding the flaps.

d) Bottle Opening: Participants used two fingers to grip the bottle and the thumb to open the lid. This task assesses grip strength, coordinated finger movements, and rotational force application.

D. Results

We report the results of our user study in Fig. 7.

For the drilling task, users encountered significant challenges with teleoperation. None of the four participants were able to successfully complete the task even once. The primary reasons for failure include difficulties in grasping the drill while maintaining its functionality, as the robot hand often obscured the view, making it hard to determine whether the index finger had triggered the drill. Additionally, aligning the drill with the screw was particularly difficult due to the small size of the screw. In comparison, our DEXOS system enabled participants to complete this task an average of 6 times per minute, while human participants, using their own hands, were able to achieve 11 times per minute.

For the bulb installation task, users performed better with teleoperation. Fifteen out of twenty trials were successful, with an average completion time of 86 seconds. However, when using the DEXOS system, participants completed the task in just 11 seconds on average, which is 8 times faster than with teleoperation. By comparison, participants could complete the task in approximately 4 seconds using their own hands.

The box packaging task proved to be another challenging

one. Only 3 out of 20 trials were successful, with successful attempts taking around 80 seconds. Failures primarily occurred when participants attempted to fold the flap, often pushing the box away in the process. Additionally, inserting the edge into the slot was difficult, as the box would either be pushed away or the large flap would get crushed. With the DEXOS system, participants completed this task 5 times per minute on average, which is 7 times faster than with teleoperation. By comparison, participants were able to complete the task 16 times per minute using their own hands.

For the bottle opening task, participants found it relatively easier to accomplish. The average throughput using teleoperation was 5 times per minute. With the DEXOS system, users achieved an average throughput of 12 times per minute, making it 2.4 times faster than teleoperation. With their own hands, participants were able to complete the task 22 times per minute.

V. CONCLUSION

We introduced DEXOS, a hand exoskeleton system that enhances dexterous manipulation and enables scalable data collection in real-world environments. By incorporating kinematic mirroring, force transparency, and tactile sensors, DEXOS overcomes teleoperation limitations, providing intuitive control and high-quality data. User studies show DEXOS significantly outperforms traditional methods in various tasks, making it a valuable tool for advancing robotic dexterity learning.

ACKNOWLEDGMENTS

REFERENCES

[1] Priyanshu Agarwal, Jonas Fox, Youngmok Yun, Marcia K O'Malley, and Ashish D Deshpande. An index finger exoskeleton with series elastic actuation for rehabilitation: Design, control and performance characterization. *The International Journal of Robotics Research*, 34 (14):1747–1772, 2015.

[2] Ilge Akkaya, Marcin Andrychowicz, Maciek Chociej, Mateusz Litwin, Bob McGrew, Arthur Petron, Alex Paino, Matthias Plappert, Glenn Powell, Raphael Ribas, et al. Solving rubik's cube with a robot hand. *arXiv preprint arXiv:1910.07113*, 2019.

[3] OpenAI: Marcin Andrychowicz, Bowen Baker, Maciek Chociej, Rafal Jozefowicz, Bob McGrew, Jakub Pachocki, Arthur Petron, Matthias Plappert, Glenn Powell, Alex Ray, et al. Learning dexterous in-hand manipulation. *The International Journal of Robotics Research*, 39 (1):3–20, 2020.

[4] Dafni Antotsiou, Guillermo Garcia-Hernando, and Tae-Kyun Kim. Task-oriented hand motion retargeting for dexterous manipulation imitation. In *Proceedings of the European Conference on Computer Vision (ECCV) Workshops*, pages 0–0, 2018.

[5] Tao Chen, Jie Xu, and Pulkit Agrawal. A system for general in-hand object re-orientation. In *Conference on Robot Learning*, pages 297–307. PMLR, 2022.

[6] Xuxin Cheng, Jialong Li, Shiqi Yang, Ge Yang, and Xiaolong Wang. Open-television: teleoperation with immersive active visual feedback. *arXiv preprint arXiv:2407.01512*, 2024.

[7] Cheng Chi, Zhenjia Xu, Chuer Pan, Eric Cousineau, Benjamin Burchfiel, Siyuan Feng, Russ Tedrake, and Shuran Song. Universal manipulation interface: In-the-wild robot teaching without in-the-wild robots. *arXiv preprint arXiv:2402.10329*, 2024.

[8] Runyu Ding, Yuzhe Qin, Jiyue Zhu, Chengzhe Jia, Shiqi Yang, Ruihan Yang, Xiaojuan Qi, and Xiaolong Wang. Bunny-visionpro: Real-time bimanual dexterous teleoperation for imitation learning. *arXiv preprint arXiv:2407.03162*, 2024.

[9] Hongjie Fang, Hao-Shu Fang, Yiming Wang, Jieji Ren, Jingjing Chen, Ruo Zhang, Weiming Wang, and Cewu Lu. Airexo: Low-cost exoskeletons for learning whole-arm manipulation in the wild. In *2024 IEEE International Conference on Robotics and Automation (ICRA)*, pages 15031–15038. IEEE, 2024.

[10] Peter Walker Ferguson, Yang Shen, and Jacob Rosen. Hand exoskeleton systems—overview. *Wearable Robotics*, pages 149–175, 2020.

[11] Wenlong Huang, Igor Mordatch, Pieter Abbeel, and Deepak Pathak. Generalization in dexterous manipulation via geometry-aware multi-task learning. *arXiv preprint arXiv:2111.03062*, 2021.

[12] Brian Byunghyun Kang, Hyungmin Choi, Haemin Lee, and Kyu-Jin Cho. Exo-glove poly ii: A polymer-based soft wearable robot for the hand with a tendon-driven actuation system. *Soft robotics*, 6(2):214–227, 2019.

[13] Priyanka Mandikal and Kristen Grauman. Dexvip: Learning dexterous grasping with human hand pose priors from video. In *Conference on Robot Learning*, pages 651–661. PMLR, 2022.

[14] Uriel Martinez-Hernandez, Michael Szollosy, Luke W Boorman, Hamideh Kerdegari, and Tony J Prescott. Towards a wearable interface for immersive telepresence in robotics. In *Interactivity, Game Creation, Design, Learning, and Innovation: 5th International Conference, ArtsIT 2016, and First International Conference, DLI 2016, Esbjerg, Denmark, May 2–3, 2016, Proceedings 5*, pages 65–73. Springer, 2017.

[15] Jedrzej Orbik, Shile Li, and Dongheui Lee. Human hand motion retargeting for dexterous robotic hand. In *2021 18th International Conference on Ubiquitous Robots (UR)*, pages 264–270. IEEE, 2021.

[16] Haozhi Qi, Brent Yi, Sudharshan Suresh, Mike Lambeta, Yi Ma, Roberto Calandra, and Jitendra Malik. General in-hand object rotation with vision and touch. In *Conference on Robot Learning*, pages 2549–2564. PMLR, 2023.

[17] Yuzhe Qin, Yueh-Hua Wu, Shaowei Liu, Hanwen Jiang, Ruihan Yang, Yang Fu, and Xiaolong Wang. Dexmv: Imitation learning for dexterous manipulation from human videos. *arXiv preprint arXiv:2108.05877*, 2021.

[18] Yuzhe Qin, Hao Su, and Xiaolong Wang. From one

hand to multiple hands: Imitation learning for dexterous manipulation from single-camera teleoperation. *arXiv preprint arXiv:2204.12490*, 2022.

[19] Ilija Radosavovic, Xiaolong Wang, Lerrel Pinto, and Jitendra Malik. State-only imitation learning for dexterous manipulation. In *2021 IEEE/RSJ International Conference on Intelligent Robots and Systems (IROS)*, pages 7865–7871. IEEE, 2021.

[20] Branden Romero, Hao-Shu Fang, Pulkit Agrawal, and Edward Adelson. Eyesight hand: Design of a fully-actuated dexterous robot hand with integrated vision-based tactile sensors and compliant actuation. *arXiv preprint arXiv:2408.06265*, 2024.

[21] Ioannis Sarakoglou, Anais Brygo, Dario Mazzanti, Nadia Garcia Hernandez, Darwin G Caldwell, and Nikos G Tsagarakis. Hexotrac: A highly under-actuated hand exoskeleton for finger tracking and force feedback. In *2016 IEEE/RSJ International Conference on Intelligent Robots and Systems (IROS)*, pages 1033–1040. IEEE, 2016.

[22] Nur Muhammad Mahi Shafiullah, Anant Rai, Haritheja Etukuru, Yiqian Liu, Ishan Misra, Soumith Chintala, and Lerrel Pinto. On bringing robots home. *arXiv preprint arXiv:2311.16098*, 2023.

[23] Kenneth Shaw, Shikhar Bahl, and Deepak Pathak. Videodex: Learning dexterity from internet videos. In *Conference on Robot Learning*, pages 654–665. PMLR, 2023.

[24] Shuran Song, Andy Zeng, Johnny Lee, and Thomas Funkhouser. Grasping in the wild: Learning 6dof closed-loop grasping from low-cost demonstrations. *IEEE Robotics and Automation Letters*, 5(3):4978–4985, 2020.

[25] Chen Wang, Haochen Shi, Weizhuo Wang, Ruohan Zhang, Li Fei-Fei, and C Karen Liu. Dexcap: Scalable and portable mocap data collection system for dexterous manipulation. *arXiv preprint arXiv:2403.07788*, 2024.

[26] Philipp Wu, Yide Shentu, Zhongke Yi, Xingyu Lin, and Pieter Abbeel. Gello: A general, low-cost, and intuitive teleoperation framework for robot manipulators. *arXiv preprint arXiv:2309.13037*, 2023.

[27] Shiqi Yang, Minghuan Liu, Yuzhe Qin, Runyu Ding, Jialong Li, Xuxin Cheng, Ruihan Yang, Sha Yi, and Xiaolong Wang. Ace: A cross-platform visual-exoskeletons system for low-cost dexterous teleoperation. *arXiv preprint arXiv:2408.11805*, 2024.

[28] Sung-Sik Yun, Brian Byunghyun Kang, and Kyu-Jin Cho. Exo-glove pm: An easily customizable modularized pneumatic assistive glove. *IEEE Robotics and Automation Letters*, 2(3):1725–1732, 2017.

[29] Youngmok Yun, Priyanshu Agarwal, Jonas Fox, Kaci E Madden, and Ashish D Deshpande. Accurate torque control of finger joints with ut hand exoskeleton through bowden cable sea. In *2016 IEEE/RSJ International Conference on Intelligent Robots and Systems (IROS)*, pages 390–397. IEEE, 2016.

[30] Han Zhang, Songbo Hu, Zhecheng Yuan, and Huazhe Xu. Doglove: Dexterous manipulation with a low-cost open-source haptic force feedback glove. *arXiv preprint arXiv:2502.07730*, 2025.

[31] Tony Z Zhao, Vikash Kumar, Sergey Levine, and Chelsea Finn. Learning fine-grained bimanual manipulation with low-cost hardware. *arXiv preprint arXiv:2304.13705*, 2023.

[32] Henry Zhu, Abhishek Gupta, Aravind Rajeswaran, Sergey Levine, and Vikash Kumar. Dexterous manipulation with deep reinforcement learning: Efficient, general, and low-cost. In *2019 International Conference on Robotics and Automation (ICRA)*, pages 3651–3657. IEEE, 2019.