MOVING FORWARD BY MOVING BACKWARD: EMBEDDING ACTION IMPACT OVER ACTION SEMANTICS

Anonymous authors
Paper under double-blind review

ABSTRACT

A common assumption when training embodied agents is that the impact of taking an action is stable; for instance, executing the "move ahead" action will always move the agent forward by a fixed distance, perhaps with some small amount of actuator-induced noise. This assumption is limiting; an agent may encounter settings that dramatically alter the impact of actions: a move ahead action on a wet floor may send the agent twice as far as it expects and using the same action with a broken wheel might transform the expected translation into a rotation. Instead of relying that the impact of an action stably reflects its pre-defined semantic meaning, we propose to model the impact of actions on-the-fly using latent embeddings. By combining these latent action embeddings with a novel, transformer-based, policy head, we design an Action Adaptive Policy (AAP). We evaluate our AAP on two challenging visual navigation tasks in the AI2-THOR environment and show that our AAP is highly performant even when faced, at inference-time, with missing actions and, previously unseen, perturbed action spaces. We will make the code and models for this work publicly available.

1 INTRODUCTION

Humans show a remarkable capacity for planning when faced with substantially constrained or augmented means by which they may interact with their environment. For instance, a human who begins to walk on ice will readily shorten their stride to prevent slipping. Likewise, a human will spare little mental effort in deciding to exert more force to lift their hand when it is weighed down by groceries. Even in these mundane tasks, we see that the effect of a humans' actions can have significantly different outcomes depending on the setting: there is no predefined one-to-one mapping between actions and their impact. The same is true for embodied agents where something as simple as attempting to moving forward can result in radically different outcomes depending on the load the agent carries, the presence of surface debris, and the maintenance level of the agent's actuators (*e.g.*, are any wheels broken?). Despite this, many existing tasks designed in the embodied AI community (Jain et al., 2019; Shridhar et al., 2020; Chen et al., 2020; Ku et al., 2020; Hall et al., 2020; Wani et al., 2020; Deitke et al., 2020; Batra et al., 2020a; Szot et al., 2021; Ehsani et al., 2021; Zeng et al., 2021; Li et al., 2021; Weihs et al., 2021; Gan et al., 2021; 2022; Padmakumar et al., 2022) make the simplifying assumption that, except for some minor actuator noise, the impact of taking a particular discrete action is functionally the same across trials. We call this the *action-stability assumption*. Artificial agents trained assuming action-stability are generally brittle, obtaining significantly worse performance, when this assumption is violated at inference time (Chattopadhyay et al., 2021); unlike humans, these agents cannot adapt their behavior without additional training.

In this work, we study how to design a reinforcement learning (RL) policy that allows an agent to adapt to significant changes in the impact of its actions at inference time. Unlike work in training robust policies via domain randomization, which generally leads to learning conservative strategies (Kumar et al., 2021), we want our agent to fully exploit the actions it has available: philosophically, if a move ahead action now moves the agent twice as fast, our goal is not to have the agent take smaller steps to compensate but, instead, to reach the goal in half the time. While prior works have studied test time adaptation of RL agents (Nagabandi et al., 2018; Wortsman et al., 2019; Yu et al., 2020; Kumar et al., 2021), the primary insight in this work is an action-centric approach which requires the agent to generate action embeddings from observations on-the-fly (i.e., no pre-defined association between actions and their effect) where these embeddings can then be used to inform future action choices.

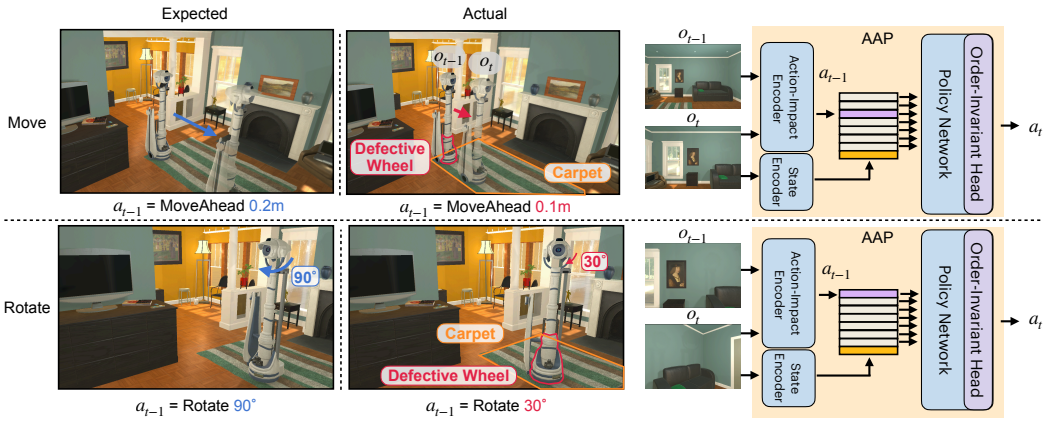

Figure 1: An agent may encounter unexpected drifts during deployment due to changes in its internal state (*e.g.*, a defective wheel) or environment (*e.g.*, hardwood floor *v.s.* carpet). Our proposed Action Adaptive Policy (AAP) introduces an action-impact encoder which takes state-changes (e.g., $o_t \rightarrow o_{t+1}$) caused by agent actions (e.g., a_{t-1}) as input and produces embeddings representing these actions' impact. Using these action embeddings, the AAP utilizes a Order-Invariant (OI) head to choose the action whose impact will allow it to most readily achieve its goal.

In our approach, summarized in Fig. 1, an agent begins each episode with a set of unlabelled actions $\mathcal{A} = \{a^0, ..., a^n\}$. Only when the agent takes one of these unlabelled actions a^i at time t, does it observe, via its sensor readings, how that action changes the agent's state and the environment. Through the use of a recurrent action-impact encoder module, the agent then embeds the observations from just before (o_t) and just after (o_{t+1}) taking the action to produce an embedding of the action $e_{i,t}$. At a future time step t', the agent may then use these action-impact embeddings to choose which action it wishes to execute. In our initial experiments, we found that standard RL policy heads, which generally consist of linear function acting on the agent's recurrent belief vector b_t, failed to use these action embeddings to their full potential. As we describe further in Sec. 4.3, we conjecture that this is because matrix multiplications impose an explicit ordering on their inputs so that any linear-based actor-critic head must treat each of the $n!$ potential action orderings separately. To this end, we introduce a novel, transformer-based, policy head which we call the Order-Invariant (OI) head. As suggested by the name, this OI head is invariant to the order of its inputs and processes the agent's belief jointly with the action embeddings to allow the agent to choose the action whose impact will allow it to most readily achieve its goal. We call this above architecture, which uses our recurrent action-impact encoder module with our OI head, the Action Adaptive Policy (AAP).

To evaluate the AAP, we train agents to complete two challenging visual navigation tasks within the AI2-THOR environment (Kolve et al., 2017): Point Navigation (PointNav) (Deitke et al., 2020) and Object Navigation (ObjectNav) (Deitke et al., 2020). For these tasks, we train models with moderate amounts of simulated actuator noise and, during evaluation, test with a range of modest to severe unseen action impacts. These include disabling actions, changing movement magnitudes, rotation degrees, *etc.*; we call these action augmentations *drifts*. We find that, even when compared to sophisticated baselines, including meta-learning (Wortsman et al., 2019), a model-based approach (Zeng et al., 2021), and RMA (Kumar et al., 2021), our AAP approach handily outperforms competing baselines and can even succeed when faced with extreme changes in the effect of actions. Further analysis shows that our agent learns to execute desirable behavior at inference time; for instance, it quickly avoids using disabled actions more than once during an episode despite not being exposed to disabled actions during training.

In summary, our contributions include: (1) an action-centric perspective towards test-time adaptation, (2) an Action Adaptive Policy network consisting of a recurrent action-impact encoder module and a novel, order-invariant, policy head, and (3) extensive experimentation showing that our proposed approach outperforms existing adaptive methods and leads to desirable emergent, inference-time, behavior.

2 Related Work

Adaptation. There are various approaches in the literature that address adaptation to unknown environments, action effects, or tasks.

Novel environments: These approaches explore the adaptation of embodied agents to unseen environment dynamics (Yu et al., 2019; Wortsman et al., 2019; Zhou et al., 2019; Li et al., 2020a;b; Peng

et al., 2020; Song et al., 2020; Loquercio et al., 2021; Evans et al., 2022; O'Connell et al., 2022; Kumar et al., 2021; 2022; Zhang et al., 2022; Agarwal et al., 2022). Various techniques such as meta-learning (Wortsman et al., 2019), domain randomization (Yu et al., 2019), and image translation (Li et al., 2020a), have been used for adaptation. In contrast to these approaches, we address changes in the actions of the agent as well. Moreover, unlike some of these approaches, *e.g.* Li et al. (2020a), we do not assume access to the test environment.

Damaged body and perturbed action space: These methods focus on scenarios that the effect of the actions changes during inference time as a result of damage, weakened motors, variable load, or other factors. Yu et al. (2020) study adaptation to a weakened motor. Nagabandi et al. (2018) explore adaptation to a missing leg. Yu et al. (2017) adapt to differences in mass and inertia of the robot components. Our approach is closer to those of Yu et al. (2020) and Nagabandi et al. (2018) that also consider changes in environment structures as well. Nonetheless, these works focus on using meta-learning for locomotion tasks and optimize the model at the testing phase while we do not optimize the policy at inference time. In our experiments, we find we outperform meta-learning approaches without requiring, computationally taxing, meta-learning training.

Novel tasks: Several works focus on adapting to novel tasks from previously learned tasks or skills (Finn et al., 2017; Gupta et al., 2018; Chitnis et al., 2019; Huang et al., 2019; Fang et al., 2021). We differ from these methods as we focus on a single task across training and testing.

Out-of-distribution generalization. Generalization to out-of-distribution test data has been studied in other domains such as computer vision (Hendrycks & Dietterich, 2019; Peng et al., 2019), NLP (McCoy et al., 2019; Zhang et al., 2019), and vision & language (Agrawal et al., 2018; Akula et al., 2021). In this paper, our focus is on visual navigation, which in contrast to the mentioned domains, is an interactive task and requires reasoning over a long sequence of images and actions.

System identification. Our paper shares similarities with the concept of System Identification (Verma et al., 2004; Bongard et al., 2006; Seegmiller et al., 2013; Cully et al., 2015; Banerjee et al., 2020; Lew et al., 2022). The major difference between our approach and the mentioned works is that we use visual perception for adaptation.

3 Problem Formulation

In this work, we aim to develop an agent which is robust to violations of the action-stability assumption. In particular, we wish to design an agent that quickly adapts to settings where the outcomes of actions at test time differ, perhaps significantly, from the outcomes observed at training time; for instance, a rotation action might rotate an agent twice as far as it did during training or, in more extreme settings, may be disabled entirely. We call these unexpected outcomes of actions, *drifts*. As discussed in Sec. 1, the action-stability assumption is prevalent in existing embodied AI tasks and thus, to evaluate how well existing models adapt to potential drifts, we must design our own evaluation protocol. To this end, we focus on two visual navigation tasks, Point and Object Navigation (PointNav and ObjectNav), as (1) visual navigation is a well-studied problem with many performant, drift-free or fixed-drift, baselines, and (2) the parsimonious action space used in visual navigation (`Move`, `Rotate`, and `End`) allows us to more fully explore the range of drifts possible for these tasks. We will now describe the details of how we employ drifts to evaluate agents for these tasks.

In this work, we assume that a particular drift, perhaps caused by a defective sensor, broken parts, motor malfunction, different amount of load, or stretched cable (Boots et al., 2014), may change across episodes. We focus primarily on two categories of potential drift occurring in visual navigation tasks: movement drift d_m, which causes an unexpected translation when executing a `Move` action, and rotation drift d_r, which leads to an unexpected rotation when executing a `Rotate` action. More specifically, we semantically define the movement and rotation actions as `Move(`d`)` = "move forward by d meters" and `Rotate(`θ`)` = "rotate by θ degrees clockwise". As we describe below, the semantic meaning of these actions is designed to be true, up to small-to-moderate noise, during training, but may change significantly during evaluation.

For each training and evaluation episode, a movement drift d_m and a rotation drift d_r are sampled and fixed throughout the episode. At every step, upon executing `Move(`d`)` the agent experiences a $d + d_m + n_d$ translation toward its forward-facing direction, where the n_d represents the high-frequency actuator noise from the RoboTHOR environment (Deitke et al., 2020). Similarly, when the agent executes `Rotate(`θ`)`, the agent rotates by $\theta + d_r + n_\theta$ degrees where n_θ again represents high-

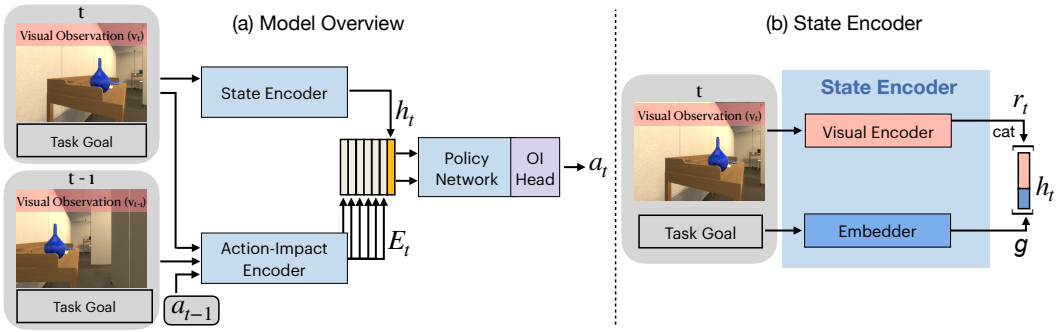

Figure 2: **(a) Model Overview.** Our model includes three modules: a state encoder, an action-impact encoder, and a policy network with an order-invariant head (OI head). **(b) State Encoder** is composed of a visual encoder for visual encoding and a embedder for task goal.

frequency actuator noise. To evaluate robustness to the action-stability assumption, the strategies we use to choose d_m and d_r differ between training and evaluation episodes.

During training. At the start of a training episode, we sample movement drift $d_m \sim U(-p, p)$ and rotation drift $d_r \sim U(-q, q)$, where $U(\cdot, \cdot)$ denotes a uniform distribution and $|p| \ll u_m$ as well as $|q| \ll 180°$. We set $u_m = 0.25$m, the standard movement magnitude in RoboTHOR.

During inference. At the start of an evaluation episode, we sample movement drift $d_m \notin [-p, p]$ and a rotation drift $d_r \notin [-q, q]$.

Note that the drifts chosen during evaluation are disjoint from those seen during training.

4 Action Adaptive Policy

We first overview our proposed Action Adaptive Policy (AAP) in Sec. 4.1. We then present the details of our action-impact encoder and Order-Invariant (OI) head in Sec. 4.2 and Sec. 4.3, respectively. Finally, we describe our training strategy in Sec. 4.4.

4.1 Model Overview

The goal of our model is to adapt based on action impacts it experiences at test time. To accomplish this, the Action Adaptive Policy (AAP) includes three modules: a state encoder, an action-impact encoder, and a policy network with an order-invariant head (OI head), as illustrated in Fig. 2 (a). The state encoder is responsible for encoding the agent's current observation, including a visual observation v_t and the task goal, into a hidden state h_t. The action-impact encoder processes the current observation, previous observation, and previous action a_{t-1} to produce a set of action embeddings E_t, one embedding for each action in the action space $\mathcal{A}$. More specifically, the job of the action-impact encoder is to update the action embeddings via the previous action recurrently using the encoded *state-change* feature (Sec. 4.2). Note that the embeddings $e_{i,t} \in E_t$ are not given information regarding which action was called to produce them; this is done precisely so that the agent cannot memorize the semantic meaning of actions during training and, instead, must explicitly model the impact of each action. Finally, the policy network with the OI head takes both the hidden state h_t and the set of action embeddings E_t as inputs and predicts an action a_t.

State Encoder. Following Batra et al. (2020b); Weihs et al. (2020); Khandelwal et al. (2022), we implement the state encoder with a visual encoder and an embedder, as shown in Fig 2 (b). Note that popular baseline policy models used for embodied AI tasks frequently employ a policy network directly after the state encoder to produce the agent's action. In this work, we use an RGB image as our visual observation v_t. For the *PointNav* task goal, we follow Savva et al. (2019) and use both GPS and compass sensors to provide the agent with the angle and distance to the goal position, $\{\Delta\rho_t, \Delta\phi_t\}$. For the *ObjectNav* task, we follow Deitke et al. (2020) and provide the agent with a semantic token corresponding to the goal object category as the task goal. We use a CLIP-pretrained ResNet-50 (He et al., 2016; Radford et al., 2021) as our visual encoder and a multi-layer perceptron (MLP) as the embedder to obtain visual representation r_t and goal representation g, respectively. Finally, we concatenate them to construct the hidden state h_t.

4.2 Action-Impact Encoder

In this section, we introduce the action-impact encoder, see Fig. 3. The goal of this encoder is to produce a set of action embeddings E_t which summarize the impact of actions the agent has taken in the episode so far. To adapt to unseen drifts during inference, these action embeddings should

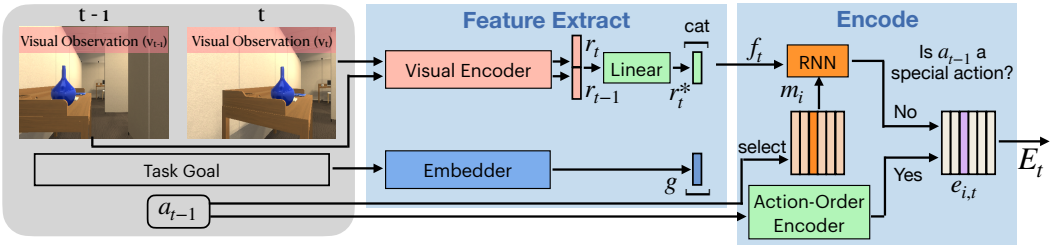

Figure 3: **Action-Impact Encoder.** The input to the action-impact encoder are two consecutive observations and the previous action. The encoder first extracts visual representations and a goal representation via a ResNet-50 and an Embedder. Concatenated, these form a state-change feature f_t. The encoder then uses the previous action $a_{t-1}{=}a^i$ to retrieve the corresponding memory m_i. With m_i, an RNN maps f_t to an embedding. Finally, the encoder registers this embedding as the action embedding $e_{i,t}$ if the previous action is not a "special" action (*i.e.*, a non-actuator-based action). Otherwise, the encoder registers an action embedding obtained from the Action-Order Encoder into $e_{i,t}$.

not overfit to action semantics, instead they should encode the impact that actions actually have at inference time. The action-impact encoder first extracts a state-change feature f from two consecutive observations. It then utilizes a recurrent neural network (RNN) to update the action embedding $e_{i,t}$ according to the previous action $a_{t-1}{=}a^i$. As the action-impact encoder generates embeddings for each action a^i without using semantic information about the action, every embedding $e_{i,t}$ only encodes the effect of its corresponding action. The decision to not use information about action semantics has one notable side-effect: at the start of an episode, all action embeddings $e_{i,0}$ will be equal so that the agent will not know what any of its actions accomplish. It is only by using its actions, and encoding their impact, that the agent can learn how its actions influence the environment.

During the feature extraction stage, we employ the same visual encoder and embedder used by the state encoder to process the visual observations, v_t and v_{t-1}, and the task goal. A linear layer is used to project the two concatenated visual representations $[r_t, r_{t-1}] \in \mathbb{R}^l$ to $r_t^* \in \mathbb{R}^{\frac{l}{2}}$.[1] We then concatenate r_t^* and the goal representation g, to form the state-change feature $f_t = [r_t^*, g]$, see the *Feature Extract* stage of Fig. 3.

After feature extraction, we apply an RNN, namely a GRU (Chung et al., 2014), to summarize state changes through time, as illustrated in the *Encode* stage of Fig. 3. The use of a recurrent network here allows the agent to refine its action embeddings using many observations through time and also ignore misleading outliers (*e.g.*, without a recurrent mechansim, an agent that takes a `Move` action in front of a wall may erroneously believe that the move action does nothing). To update the action embeddings recurrently, we utilize the previous action $a_{t-1} = a^i$ to index into a matrix of memory vectors to obtain m_i. This memory vector is passed into the RNN with f_t recurrently. Note that we use the same RNN to summarize the state-changes for all actions. Moreover, since a_{t-1} is only used to select the memory, the RNN is agnostic to the action order and focuses only on state-change modeling. Thus, the action embedding produced by the RNN does not contain action semantics, but does carry state-changes information (*i.e.*, action impact).

One technical caveat: the PointNav and ObjectNav tasks both have a special `End` action that denotes that the agent is finished and immediately ends the episode. Unlike the other actions, it makes little sense to apply action drift to `End` as it is completely independent from the agent's actuators. We, in fact, do want our agent to overfit to the semantics of `End`. To this end we employ an Action-Order Encoder which assigns a unique action embedding to the `End` in lieu of the recurrent action embedding. Note that these types of unique action embeddings are frequently used in traditional models for embodied agents to encode action semantics. Finally, we register the recurrent embedding into the action embedding $e_{i,t}$ via the previous action $a_{t-1} = a^i$, if this action a^i is not a special action (*Encode* panel of Fig. 3); otherwise, we register the action embedding $e_{i,t}$ as the output of the Action-Order Encoder.

4.3 Policy Network with an Order-Invariant Head

Standard policy networks used in embodied AI use an RNN to summarize state representations h_t through time and an actor-critic head to produce the agent's policy (a probability distribution over

[1] $l = 1024$ for *PointNav* and $l = 3136$ for *ObjectNav*

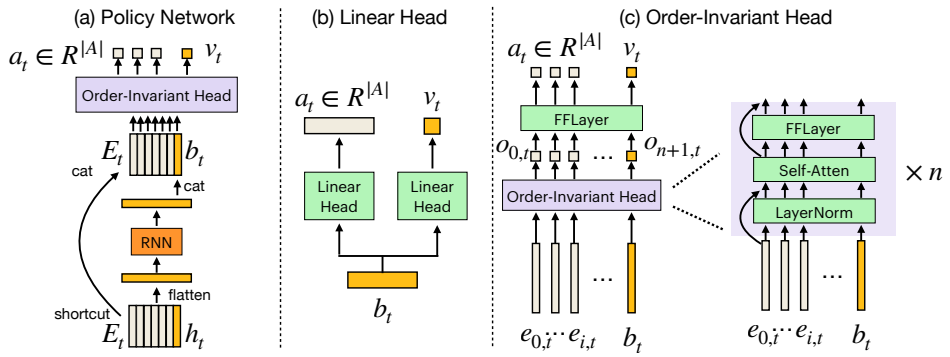

Figure 4: **(a) Policy Network with Order-Invariant Head** first flattens the input and uses an RNN to produce a belief b. An Order-Invariant head further processes the action embeddings E and belief b to predict action probability and value. **(b) Linear actor-critic** takes the belief b from RNN to predict action probability and value. **(c) Order-Invariant Head** is invariant to the order of its inputs so the policy predicts the action probability and value based on state-changes (*i.e.*, action impact) instead of action semantics (*i.e.*, a consistent action order).

actions) and an estimate of the current state's value. Frequently, this actor-critic head is a simple linear function that maps the agent's current beliefs b_t (*e.g.*, the output of the RNN) to generate the above outputs, see Fig. 4 (b). As the matrix multiplications used by this linear function require that their inputs and outputs be explicitly ordered, this imposes an explicit, consistent, ordering on the agent's actions. More specifically, let the weight matrix in the linear mapping be $W = [\mathbf{w}_0|\dots|\mathbf{w}_n]^T$, then $\mathbf{w}_i$ are the unique set of weights corresponding to the ith action a^i. Because the $\mathbf{w}_i^T$ is specifically learned for the ith action during the training stage, it encodes the semantics of action a^i and thereby prevents the policy from generalizing to unexpected drifts applied to a^i. For example, if the action a^i is `Rotate(30°)`, and the policy is learned with training drifts in the range between $[-15°, 15°]$, then policy will fail catastrophically when experiencing an unexpected drift $20°$ because the policy has overfit to the semantics that the a^i should only be associated with $30° \pm 15°$ rotation.

To address this issue, we propose to equip our policy network with a transformer-based Order-Invariant (OI) actor-critic head, as shown in Fig. 4 (a). The OI head, illustrated in Fig. 4 (c), takes both the belief b_t and the action embeddings $e_{0,t}, \dots, e_{n,t}$ as input to produce $o_{0,t}, \dots, o_{n,t}, o_{n+1,t}$, where the $o_{n+1,t}$ is produced by b_t. A Feed-Forward Layer then maps the $o_{0,t}, \dots, o_{n,t}$ to action logits and the $o_{n+1,t}$ to an estimate of the current state's value. Finally, we apply Softmax on the action logits to generate action probabilities. We implement the OI head using a Transformer (Vaswani et al., 2017) encoder without a positional encoding. By design, the extensive weight sharing in a transformer (*e.g.*, the query, key, and value embedding, as well as the Feed-Forward Layer are shared across all the input tokens) means that there are no unique weights assigned to any particular action.

In conclusion, as (1) the transformer uses the same weights for each input embedding, (2) the removal of positional encoding prevents the model from focusing on action semantics, and (3) the set of action embeddings E is used to represent the impact of actions $a \in \mathcal{A}$, the proposed AAP is thereby able to choose the action most useful for its goal despite unexpected drifts. In Sec. 5.1 we show the importance of weight sharing and the action embeddings E by comparing our overall model with two ablations: (i) AAP but with a linear actor-critic head and, (ii) AAP but with no Action-Impact Encoder.

4.4 Training Strategy

To train our agent, we use DD-PPO (Wijmans et al., 2020) to perform policy optimization via reinforcement learning. To endow the action embeddings E with an ability to describe the state-change between two consecutive observations, we utilize an auxiliary model-based forward prediction loss to optimize the action-impact encoder. In particular, we apply a Feed-Forward Layer (a shared MLP applied to each input independently), which operates on each embedding $\{e_0, \dots, e_n\}$ independently to predict the agent state-change from the current step t to the next step $t+1$. As long as the RNN in the action-impact encoder has been exposed to state-changes resulting from an action, the action-impact encoder can learn to predict the precise agent state change Δs_{t+1}. Our forward prediction loss is optimized jointly alongside DD-PPO using the same collection of

on-policy trajectories collected in standard DD-PPO training. Namely, if M consecutive agent steps are collected during an on-policy rollout, then we apply a simple *MSE* Loss *w.r.t* the ground-truth agent state-changes $\Delta\mathbf{s}^* = \{\Delta s^*_{t-M}, \Delta s^*_{t-M+1}, ..., \Delta s^*_t\}$: $\mathcal{L}_{\text{forward}} = MSE(\Delta\mathbf{s}, \Delta\mathbf{s}^*)$, where $\Delta\mathbf{s} = \{\Delta s_{t-M}, \Delta s_{t-M+1}, ..., \Delta s_t\}$ are the predicted agent state-changes. Therefore, our overall learning objective is $\mathcal{L} = \mathcal{L}_{\text{PPO}} + \alpha\mathcal{L}_{\text{forward}}$, where α controls the relative importance of $\mathcal{L}_{\text{forward}}$. We set $\alpha = 1.0$ in this work. For model optimization details, see Fig. 8 in the Supplementary Material.

5 EXPERIMENTS

In our experiments, we aim to answer the following questions: (1) How does the proposed AAP perform when exposed to expected or modest drifts and how does this performance compare to when it is exposed to unseen or severe drifts? (2) Can the AAP handle extreme cases where some actions are disabled and have no effect on the environment? (3) When faced with multiple disabled actions, can the AAP recognize these actions and avoid using them? (4) Is it important to use the action-impact encoder and OI head jointly or can using one of these modules bring most of the benefit? (5) Qualitatively, how does the AAP adapt to, previously unseen, action drifts?

Implementation details. We consider two visual navigation tasks, *PointNav* and *ObjectNav*, using the RoboTHOR framework (Deitke et al., 2020) within the AI2-THOR environment (Kolve et al., 2017). RoboTHOR contains 75 scenes replicating counterparts in the real-world and allows for rich robotic physical simulation (*e.g.*, actuator noise and collisions). The goals of the two tasks are for the agent to navigate to a given target; in *PointNav* this target is a GPS coordinate and in *ObjectNav* this target is an object category. In the environment, we consider 16 actions in action space $\mathcal{A} = \{\texttt{Move(d)}, \texttt{Rotate}(\theta), \texttt{End}\}$, where $\texttt{d} \in \{0.05, 0.15, 0.25\}$ in meters and $\theta \in \{0°, \pm30°, \pm60°, \pm90°, \pm120°, \pm150°, 180°\}$. We set $p = 0.05$m so that we sample movement drifts $d_m \sim U(-0.05, 0.05)$ and $q = 15°$ so that we sample rotation drifts $d_r \sim U(-15°, 15°)$ during training. We then evaluate using drifts $d^*_m \in \{\pm0.05, \pm0.1, 0.2, 0.4\}$ and $d^*_r \in \{\pm15°, \pm30°, \pm45°, \pm90°, \pm135°, 180°\}$. Note that only $d_m = \pm0.05$ and $d_r = \pm15°$ are drifts seen during training. The agent is considered to have successfully completed an episode if it takes the `End` action, which always immediately ends an episode, and its location is within in 0.2 meters of the target for *PointNav* or if the target object is visible and within 1.0 meters for *ObjectNav*. Otherwise, the episode is considered a failure. We use the AllenAct (Weihs et al., 2020) framework to conduct all the experiments. During training, we employ the default reward shaping defined in AllenAct: $R_{\text{penalty}} + R_{\text{success}} + R_{\text{distance}}$, where $R_{\text{penalty}} = -0.01$, $R_{\text{success}} = 10$, and R_{distance} denotes the change of distances from target between two consecutive steps. See Sec. A for training details.

Baselines. Each baseline method uses the same visual encoder, goal embedder, RNN and linear actor-critic in the policy network unless stated otherwise. We consider following baselines.
- *EmbCLIP* (Khandelwal et al., 2022) is a baseline model implemented in AllenAct that uses a CLIP-pretrained ResNet-50 visual backbone. It simply uses a state-encoder to obtain hidden state h_t, applies a RNN to obtain recurrent belief b_t over h_t, and uses a linear actor-critic head to predict an action a_t via b_t. This architecture is used by the current SoTA agent for RoboTHOR ObjectNav without action drift (Deitke et al., 2022).
- *Meta-RL* (Wortsman et al., 2019) is an RL approach based on Meta-Learning (Finn et al., 2017). However, since we do not provide reward signal during inference, we cannot simply apply an arbitrary meta-RL method developed in any prior work. Thus, we follow (Wortsman et al., 2019) to employ the same $\mathcal{L}_{\text{forward}}$ in our AAP as the meta-objective during training and inference. We add an MLP after the belief b_t in the EmbCLIP baseline policy to predict the next agent state-change Δs_{t+1} to enable the meta-update phase during both training and inference stages.
- *RMA* (Kumar et al., 2021) is a method assessing environmental properties using collected experiences. Although they focus on locomotion tasks, we adapt their idea into our studied problem. At the first stage in RMA training, we input both the movement drift d_m and rotation drift d_r into the model to learn a latent code $c \in \mathcal{R}^8$ of the environment. The policy network then takes c as an additional representation to make a prediction. During the second training stage, we follow (Kumar et al., 2021) to learn a 1-D Conv-Net that processes the past 16 agent states to predict c. In this stage, all modules are frozen, except for the 1-D Conv-Net.
- *Model-Based* (Zeng et al., 2021) is a model-based forward prediction approach for the agent state-changes $\Delta\mathbf{s}$. However, they focus on predicting the future agent state-changes associated with different actions, and further embed them into action embeddings. Moreover, they use a linear actor-critic to make a prediction which does not fully utilize the advantage of our action-centric approach.

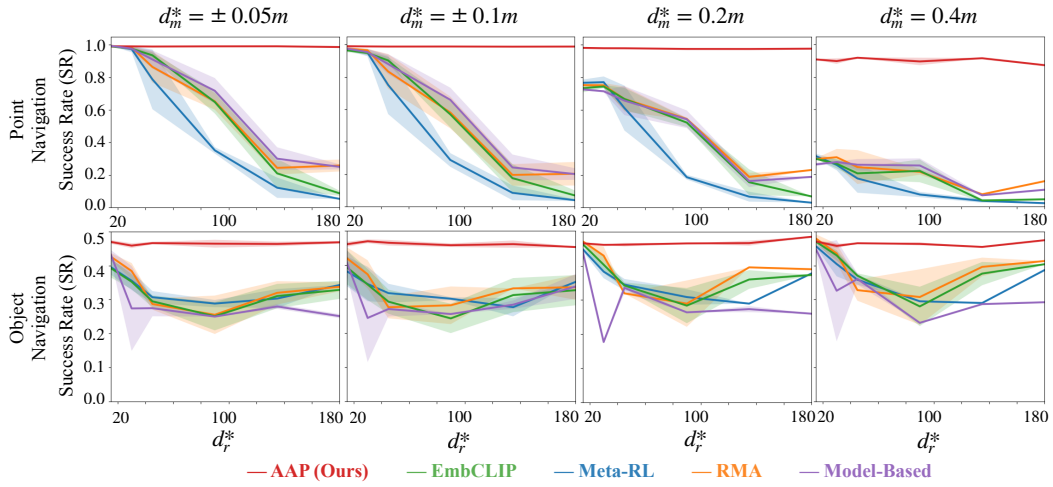

Figure 5: **AAP results.** Top: *PointNav* evaluation. Bottom: *ObjectNav* evaluation. We compare the proposed AAP with baselines, including EmbCLIP, Meta-RL, RMA, and Model-Based. We measure the *SR* over different drifts, including $d_m^* = \{\pm 0.05, \pm 0.1, 0.2, 0.4\}$ and $d_r^* = \{\pm 15°, \pm 30°, \pm 45°, \pm 90°, \pm 135°, 180°\}$.

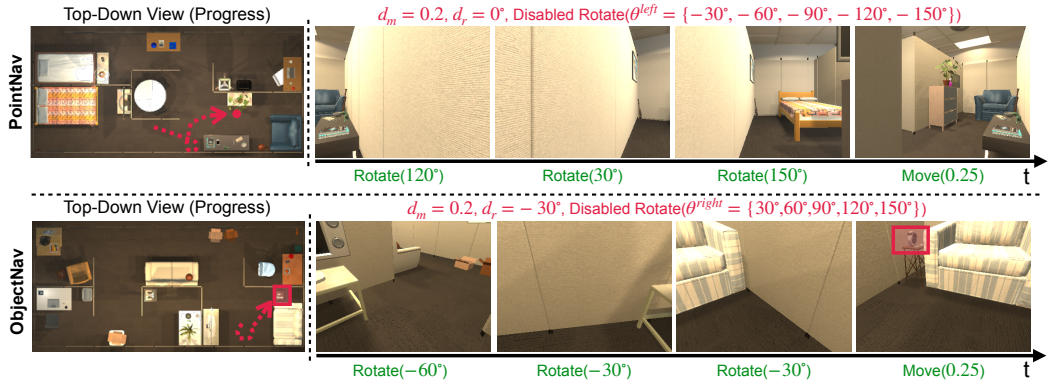

Figure 6: **Qualitative Results.** Examples of *PointNav* (top) and *ObjectNav* (bottom), where $d_m = 0.2$ and $d_r = 0°$ and $d_r = -30°$. Rotate left and rotate right actions are disabled, respectively. The agent adapts by rotating in the other direction to compensate for the disabled actions.

5.1 Results

Evaluation Metrics. We evaluate all models by their *Success Rate (SR)*; we also report the popular *Success weighted by Path Length (SPL)* (Anderson et al., 2018) metric in Sec. B. *SR* is the proportion of successful episodes over the validation set. In addition, we report the *Avoid Disabled Actions Rate (ADR)* and *Disabled Action Usage (DAU)* metrics in the **Disabled Actions** experiments. The *ADR* equals the proportion of episodes in which the agent uses no disabled action more than once, and the *DAU* computes the total number of times disabled actions are used averaged across all episodes.

Different Drifts. The quantitative results for *PointNav* and *ObjectNav* are shown in Fig. 5. As shown, the *SR* of competing baselines decreases remarkably as the movement drifts d_m and rotation drifts d_r increase from modest ($d_m = \pm 0.05$, $d_r = \pm 15°$) to more severe (d_m=0.4, d_r=180°). Alternatively, our AAP performs consistently across all the drift changes and outperforms baselines significantly. Note that the baselines perform well (*SR*≈1.0 for *PointNav* and *SR*≈46% for *ObjectNav*) with seen drifts (d_m=0.05, d_r=15°), but our AAP achieves consistent *SR* across all drifts because the action embeddings effectively capture the state-changes associated with actions so the OI head can thereby recognize that, for instance, action $a_i = \texttt{Rotate}(30°)$ becomes another action $a_j = \texttt{Rotate}(120°)$ with rotation drift $d_r = 90°$ during inference. As the magnitude of movement actions are not bounded (unlike rotation actions $\texttt{Rotate}(\theta)$, where $\theta \in [-180°, 180°]$), AAP's performance begins to decrease for very large movement drifts (*e.g.*, $d_m = 0.4$).

Disabled Actions. We consider two experimental settings to evaluate how models perform when some actions are disabled (*e.g.*, due to to a malfunctioning motors or damaged wheel). In the first

Table 1: **Disabled Actions** results in *PointNav* (a,c) and *ObjectNav* (b,d). The baselines are EmbCLIP (Khandelwal et al., 2022), Meta-RL (Wortsman et al., 2019), RMA (Kumar et al., 2021), and Model-Based (Zeng et al., 2021). ↑ and ↓ indicate if larger or smaller numbers are preferred.

(a) *PointNav* Success Rate (*SR*)

SR↑	disable θ^{left}	disable θ^{right}	Avg.
AAP (Ours)	**95.3**	**98.4**	**96.9**
EmbCLIP	11.0	13.0	12.0
Meta-RL	34.2	32.0	33.1
RMA	15.4	10.8	13.1
Model-Based	36.7	10.6	23.7

(b) *ObjectNav* Success Rate (*SR*)

SR↑	disable θ^{left}	disable θ^{right}	Avg.
AAP (Ours)	**34.6**	**42.4**	**38.5**
EmbCLIP	14.1	22.2	18.2
Meta-RL	20.4	26.1	23.3
RMA	10.2	24.6	17.4
Model-Based	19.7	10.4	15.1

(c) Analysis of disabled actions in *PointNav*

ADR↑ / DAU↓	disable θ^{left}	disable θ^{right}
AAP (Ours)	**11.9 / 27.7**	**18.7 / 15.6**
EmbCLIP	0.3 / 94.9	0.7 / 92.5
Meta-RL	0.8 / 72.8	0.5 / 73.3
RMA	0.4 / 97.4	0.6 / 95.3
Model-Based	1.2 / 79.3	0.3 / 97.5

(d) Analysis of disabled actions in *ObjectNav*

ADR↑ / DAU↓	disable θ^{left}	disable θ^{right}
AAP (Ours)	2.5 / **34.1**	2.6 / **24.5**
EmbCLIP	1.2 / 89.4	2.2 / 75.1
Meta-RL	2.2 / 72.7	2.0 / 73.3
RMA	0.4 / 93.9	3.2 / 69.6
Model-Based	**2.7** / 75.2	**2.8** / 82.9

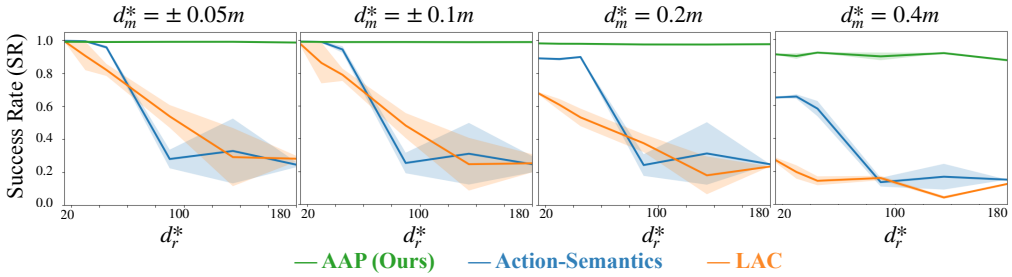

Figure 7: **Ablation studies.** We conducted the ablation studies on *PointNav* by comparing AAP to: (1) "*LAC*", a variant of AAP that uses a linear actor-critic head instead of our OI head and (2) "*Action-Semantics*", a variant of AAP that uses the OI head without the Action-Impact Encoder.

setting we disable the 5 rotation angles $\theta^{\text{right}} \in \{30°, 60°, 90°, 120°, 150°\}$ so that the agent cannot rotate clockwise and, in the second setting, we disable $\theta^{\text{left}} \in \{-30°, -60°, -90°, -120°, -150°\}$ so that the agent can only rotate clockwise. We otherwise set $d_m = 0.2$m and $d_r = 0°$ in this experiment. The *SR* for *PointNav* and *ObjectNav* are shown in Tab. 1a and Tab. 1b. As shown, there is a huge difference between the baselines and AAP; for instance, for the *PointNav* task, AAP achieves near 100% *SR* while the best competing baseline (Meta-RL) achieves <35%. In addition, AAP outperforms the baselines by at least 15.2% on average in *ObjectNav*. We further report the *ADR* and *DAU* metrics for this task in Tab. 1c and Tab. 1d; from these tables we see that AAP is very effective at recognizing what actions are disabled through the proposed action embeddings E, see *ADR*, and efficiently avoids using such actions, see *DAU*. Fig. 6 shows an example with θ^{left} on *PointNav* and another one with θ^{right} on *ObjectNav*. See more examples in Sec. C and Fig. 10.

Ablation Studies. We investigated which module in the AAP contributes the most to the performance, or if they are all necessary and complementary to one another. We conducted the ablation studies on *PointNav* by comparing our proposed AAP to: (1) "*LAC*", a variant of AAP that uses a linear actor-critic head instead of our OI head and (2) "*Action-Semantics*", a variant of AAP that uses the OI head without the Action-Impact Encoder (so there are unique learnable embeddings for each unique action). The results are shown in Fig. 7. Although *Action-Semantics* achieves similar *SR* to AAP when $d_r \in \{15°, 30°\}$, its performance starts decreasing as the drifts become more dramatic. On the other hand, the poor *SR* of *LAC* confirms our OI head is far better able to leverage the predicted action embeddings than a linear actor-critic.

6 Conclusion

We propose Action Adaptive Policy (AAP) to adapt to unseen effects of actions during inference. Our central insight is to embed the impact of the actions on-the-fly rather than relying on their training-time semantics. Our experiments show that AAP is quite effective at adapting to unseen action outcomes at test time, outperforming a set of strong baselines by a significant margin, and can even maintain its performance when some of the actions are completely disabled.

REFERENCES

Ananye Agarwal, Ashish Kumar, Jitendra Malik, and Deepak Pathak. Legged locomotion in challenging terrains using egocentric vision. In *CoRL*, 2022. 3

Aishwarya Agrawal, Dhruv Batra, Devi Parikh, and Aniruddha Kembhavi. Don't just assume; look and answer: Overcoming priors for visual question answering. In *CVPR*, 2018. 3

Arjun Reddy Akula, Soravit Changpinyo, Boqing Gong, Piyush Kumar Sharma, Song-Chun Zhu, and Radu Soricut. Crossvqa: Scalably generating benchmarks for systematically testing vqa generalization. In *EMNLP*, 2021. 3

Peter Anderson, Angel Chang, Devendra Singh Chaplot, Alexey Dosovitskiy, Saurabh Gupta, Vladlen Koltun, Jana Kosecka, Jitendra Malik, Roozbeh Mottaghi, Manolis Savva, and Amir R. Zamir. On evaluation of embodied navigation agents. *arXiv*, 2018. 8, 15

Somrita Banerjee, James Harrison, P Michael Furlong, and Marco Pavone. Adaptive meta-learning for identification of rover-terrain dynamics. *arXiv*, 2020. 3

Dhruv Batra, Angel X Chang, Sonia Chernova, Andrew J Davison, Jia Deng, Vladlen Koltun, Sergey Levine, Jitendra Malik, Igor Mordatch, Roozbeh Mottaghi, et al. Rearrangement: A challenge for embodied ai. *arXiv*, 2020a. 1

Dhruv Batra, Aaron Gokaslan, Aniruddha Kembhavi, Oleksandr Maksymets, Roozbeh Mottaghi, Manolis Savva, A. Toshev, and Erik Wijmans. Objectnav revisited: On evaluation of embodied agents navigating to objects. *arXiv*, 2020b. 4

Josh C. Bongard, Victor Zykov, and Hod Lipson. Resilient machines through continuous self-modeling. *Science*, 2006. 3

Byron Boots, Arunkumar Byravan, and Dieter Fox. Learning predictive models of a depth camera & manipulator from raw execution traces. In *ICRA*, 2014. 3

Prithvijit Chattopadhyay, Judy Hoffman, Roozbeh Mottaghi, and Aniruddha Kembhavi. Robustnav: Towards benchmarking robustness in embodied navigation. In *ICCV*, 2021. 1

Changan Chen, Unnat Jain, Carl Schissler, Sebastia Vicenc Amengual Gari, Ziad Al-Halah, Vamsi Krishna Ithapu, Philip Robinson, and Kristen Grauman. Soundspaces: Audio-visual navigation in 3d environments. In *ECCV*, 2020. 1

Rohan Chitnis, Leslie Pack Kaelbling, and Tomas Lozano-Perez. Learning quickly to plan quickly using modular meta-learning. In *ICRA*, 2019. 3

Junyoung Chung, Caglar Gulcehre, KyungHyun Cho, and Yoshua Bengio. Empirical evaluation of gated recurrent neural networks on sequence modeling. In *NeurIPS Workshop on Deep Learning*, 2014. 5

Antoine Cully, Jeff Clune, Danesh Tarapore, and Jean-Baptiste Mouret. Robots that can adapt like animals. *Nature*, 2015. 3

Matt Deitke, Winson Han, Alvaro Herrasti, Aniruddha Kembhavi, Eric Kolve, Roozbeh Mottaghi, Jordi Salvador, Dustin Schwenk, Eli VanderBilt, Matthew Wallingford, et al. Robothor: An open simulation-to-real embodied ai platform. In *CVPR*, 2020. 1, 2, 3, 4, 7

Matt Deitke, Eli VanderBilt, Alvaro Herrasti, Luca Weihs, Jordi Salvador, Kiana Ehsani, Winson Han, Eric Kolve, Ali Farhadi, Aniruddha Kembhavi, and Roozbeh Mottaghi. Procthor: Large-scale embodied ai using procedural generation. *arXiv*, 2022. 7

Kiana Ehsani, Winson Han, Alvaro Herrasti, Eli VanderBilt, Luca Weihs, Eric Kolve, Aniruddha Kembhavi, and Roozbeh Mottaghi. Manipulathor: A framework for visual object manipulation. In *CVPR*, 2021. 1

Ben Evans, Abitha Thankaraj, and Lerrel Pinto. Context is everything: Implicit identification for dynamics adaptation. In *ICRA*, 2022. 3

Kuan Fang, Yuke Zhu, Silvio Savarese, and Li Fei-Fei. Learning generalizable skills via automated generation of diverse tasks. In *RSS*, 2021. 3

Chelsea Finn, Pieter Abbeel, and Sergey Levine. Model-agnostic meta-learning for fast adaptation of deep networks. In *ICML*, 2017. 3, 7

Chuang Gan, Jeremy Schwartz, Seth Alter, Martin Schrimpf, James Traer, Julian De Freitas, Jonas Kubilius, Abhishek Bhandwaldar, Nick Haber, Megumi Sano, et al. Threedworld: A platform for interactive multi-modal physical simulation. In *NeurIPS Dataset*, 2021. 1

Chuang Gan, Siyuan Zhou, Jeremy Schwartz, Seth Alter, Abhishek Bhandwaldar, Dan Gutfreund, Daniel LK Yamins, James J DiCarlo, Josh McDermott, Antonio Torralba, et al. The threedworld transport challenge: A visually guided task-and-motion planning benchmark towards physically realistic embodied ai. In *ICRA*, 2022. 1

Abhishek Gupta, Russell Mendonca, Yuxuan Liu, P. Abbeel, and Sergey Levine. Meta-reinforcement learning of structured exploration strategies. In *NeurIPS*, 2018. 3

David Hall, Ben Talbot, Suman Raj Bista, Haoyang Zhang, Rohan Smith, Feras Dayoub, and Niko Sünderhauf. The robotic vision scene understanding challenge. In *arXiv preprint arXiv:2009.05246*, 2020. 1

Kaiming He, Xiangyu Zhang, Shaoqing Ren, and Jian Sun. Deep residual learning for image recognition. In *CVPR*, 2016. 4

Dan Hendrycks and Thomas G. Dietterich. Benchmarking neural network robustness to common corruptions and perturbations. In *ICLR*, 2019. 3

De-An Huang, Suraj Nair, Danfei Xu, Yuke Zhu, Animesh Garg, Li Fei-Fei, Silvio Savarese, and Juan Carlos Niebles. Neural task graphs: Generalizing to unseen tasks from a single video demonstration. In *CVPR*, 2019. 3

Unnat Jain, Luca Weihs, Eric Kolve, Mohammad Rastegari, Svetlana Lazebnik, Ali Farhadi, Alexander G Schwing, and Aniruddha Kembhavi. Two body problem: Collaborative visual task completion. In *CVPR*, 2019. 1

Apoorv Khandelwal, Luca Weihs, Roozbeh Mottaghi, and Aniruddha Kembhavi. Simple but effective: Clip embeddings for embodied ai. In *CVPR*, pp. 14829–14838, 2022. 4, 7, 9

Eric Kolve, Roozbeh Mottaghi, Winson Han, Eli VanderBilt, Luca Weihs, Alvaro Herrasti, Daniel Gordon, Yuke Zhu, Abhinav Gupta, and Ali Farhadi. Ai2-thor: An interactive 3d environment for visual ai. In *arxiv*, 2017. 2, 7

Alexander Ku, Peter Anderson, Roma Patel, Eugene Ie, and Jason Baldridge. Room-across-room: Multilingual vision-and-language navigation with dense spatiotemporal grounding. In *EMNLP*, 2020. 1

Ashish Kumar, Zipeng Fu, Deepak Pathak, and Jitendra Malik. Rma: Rapid motor adaptation for legged robots. In *RSS*, 2021. 1, 2, 3, 7, 9

Ashish Kumar, Zhongyu Li, Jun Zeng, Deepak Pathak, Koushil Sreenath, and Jitendra Malik. Adapting rapid motor adaptation for bipedal robots. In *IROS*, 2022. 3

Thomas Lew, Apoorva Sharma, James Harrison, Andrew Bylard, and Marco Pavone. Safe active dynamics learning and control: A sequential exploration–exploitation framework. *IEEE Transactions on Robotics*, 2022. 3

Chengshu Li, Fei Xia, Roberto Martín-Martín, Michael Lingelbach, Sanjana Srivastava, Bokui Shen, Kent Vainio, Cem Gokmen, Gokul Dharan, Tanish Jain, et al. igibson 2.0: Object-centric simulation for robot learning of everyday household tasks. In *CoRL*, 2021. 1

Shangda Li, Devendra Singh Chaplot, Yao-Hung Hubert Tsai, Yue Wu, Louis-Philippe Morency, and Ruslan Salakhutdinov. Unsupervised domain adaptation for visual navigation. *arXiv*, 2020a. 2, 3

Shunkai Li, Xin Wang, Yingdian Cao, Fei Xue, Zike Yan, and Hongbin Zha. Self-supervised deep visual odometry with online adaptation. In *CVPR*, 2020b. 2

Antonio Loquercio, Elia Kaufmann, René Ranftl, Matthias Müller, Vladlen Koltun, and Davide Scaramuzza. Learning high-speed flight in the wild. In *Science Robotics*, 2021. 3

R. Thomas McCoy, Ellie Pavlick, and Tal Linzen. Right for the wrong reasons: Diagnosing syntactic heuristics in natural language inference. In *ACL*, 2019. 3

Anusha Nagabandi, Ignasi Clavera, Simin Liu, Ronald S. Fearing, P. Abbeel, Sergey Levine, and Chelsea Finn. Learning to adapt in dynamic, real-world environments through meta-reinforcement learning. In *ICLR*, 2018. 1, 3

Michael O'Connell, Guanya Shi, Xichen Shi, Kamyar Azizzadenesheli, Anima Anandkumar, Yisong Yue, and Soon-Jo Chung. Neural-fly enables rapid learning for agile flight in strong winds. In *Science Robotics*, 2022. 3

Aishwarya Padmakumar, Jesse Thomason, Ayush Shrivastava, Patrick Lange, Anjali Narayan-Chen, Spandana Gella, Robinson Piramuthu, Gokhan Tur, and Dilek Hakkani-Tur. Teach: Task-driven embodied agents that chat. In *AAAI*, 2022. 1

Xingchao Peng, Qinxun Bai, Xide Xia, Zijun Huang, Kate Saenko, and Bo Wang. Moment matching for multi-source domain adaptation. In *ICCV*, 2019. 3

Xue Bin Peng, Erwin Coumans, Tingnan Zhang, Tsang-Wei Edward Lee, Jie Tan, and Sergey Levine. Learning agile robotic locomotion skills by imitating animals. In *RSS*, 2020. 2

Alec Radford, Jong Wook Kim, Chris Hallacy, Aditya Ramesh, Gabriel Goh, Sandhini Agarwal, Girish Sastry, Amanda Askell, Pamela Mishkin, Jack Clark, et al. Learning transferable visual models from natural language supervision. In *ICML*, 2021. 4

Manolis Savva, Abhishek Kadian, Oleksandr Maksymets, Yili Zhao, Erik Wijmans, Bhavana Jain, Julian Straub, Jia Liu, Vladlen Koltun, Jitendra Malik, Devi Parikh, and Dhruv Batra. Habitat: A platform for embodied ai research. In *ICCV*, 2019. 4

Neal Seegmiller, Forrest Rogers-Marcovitz, Greg Miller, and Alonzo Kelly. Vehicle model identification by integrated prediction error minimization. *The Intl. J. of Robotics Research*, 2013. 3

Mohit Shridhar, Jesse Thomason, Daniel Gordon, Yonatan Bisk, Winson Han, Roozbeh Mottaghi, Luke Zettlemoyer, and Dieter Fox. Alfred: A benchmark for interpreting grounded instructions for everyday tasks. In *CVPR*, 2020. 1

Xingyou Song, Yuxiang Yang, Krzysztof Choromanski, Ken Caluwaerts, Wenbo Gao, Chelsea Finn, and Jie Tan. Rapidly adaptable legged robots via evolutionary meta-learning. In *IROS*, 2020. 3

Andrew Szot, Alexander Clegg, Eric Undersander, Erik Wijmans, Yili Zhao, John Turner, Noah Maestre, Mustafa Mukadam, Devendra Singh Chaplot, Oleksandr Maksymets, et al. Habitat 2.0: Training home assistants to rearrange their habitat. In *NeurIPS*, 2021. 1

Ashish Vaswani, Noam Shazeer, Niki Parmar, Jakob Uszkoreit, Llion Jones, Aidan N Gomez, Łukasz Kaiser, and Illia Polosukhin. Attention is all you need. In *NeurIPS*, 2017. 6

Vandi Verma, Geoffrey J. Gordon, Reid G. Simmons, and Sebastian Thrun. Real-time fault diagnosis [robot fault diagnosis]. *IEEE Robotics & Automation Magazine*, 2004. 3

Saim Wani, Shivansh Patel, Unnat Jain, Angel X. Chang, and Manolis Savva. Multi-on: Benchmarking semantic map memory using multi-object navigation. In *NeurIPS*, 2020. 1

Luca Weihs, Jordi Salvador, Klemen Kotar, Unnat Jain, Kuo-Hao Zeng, Roozbeh Mottaghi, and Aniruddha Kembhavi. Allenact: A framework for embodied ai research. In *arXiv*, 2020. 4, 7

Luca Weihs, Matt Deitke, Aniruddha Kembhavi, and Roozbeh Mottaghi. Visual room rearrangement. In *CVPR*, 2021. 1

Erik Wijmans, Abhishek Kadian, Ari S. Morcos, Stefan Lee, Irfan Essa, Devi Parikh, Manolis Savva, and Dhruv Batra. Dd-ppo: Learning near-perfect pointgoal navigators from 2.5 billion frames. In *ICLR*, 2020. 6

Mitchell Wortsman, Kiana Ehsani, Mohammad Rastegari, Ali Farhadi, and Roozbeh Mottaghi. Learning to learn how to learn: Self-adaptive visual navigation using meta-learning. In *CVPR*, 2019. 1, 2, 3, 7, 9

Wenhao Yu, C. Karen Liu, and Greg Turk. Preparing for the unknown: Learning a universal policy with online system identification. In *RSS*, 2017. 3

Wenhao Yu, C. Karen Liu, and Greg Turk. Policy transfer with strategy optimization. In *ICLR*, 2019. 2, 3

Wenhao Yu, Jie Tan, Yunfei Bai, Erwin Coumans, and Sehoon Ha. Learning fast adaptation with meta strategy optimization. *IEEE Robotics and Automation Letters*, 2020. 1, 3

Kuo-Hao Zeng, Luca Weihs, Ali Farhadi, and Roozbeh Mottaghi. Pushing it out of the way: Interactive visual navigation. In *CVPR*, 2021. 1, 2, 7, 9

Dingqi Zhang, Antonio Loquercio, Xiangyu Wu, Ashish Kumar, Jitendra Malik, and Mark W Mueller. A zero-shot adaptive quadcopter controller. In *arXiv*, 2022. 3

Yuan Zhang, Jason Baldridge, and Luheng He. Paws: Paraphrase adversaries from word scrambling. In *NAACL*, 2019. 3

Wenxuan Zhou, Lerrel Pinto, and Abhinav Kumar Gupta. Environment probing interaction policies. In *ICLR*, 2019. 2

SUPPLEMENTARY MATERIAL

A TRAINING PIPELINE

The training pipeline for forward pass and backward update is shown in the Fig. 8. During training, we use the Adam optimizer and an initial learning rate of $3e{-}4$ that linearly decays to 0 over 75M and 300M steps for the two tasks, respectively. We set the standard RL reward discounting parameter γ to 0.99, λ_{gae} to 0.95, and number of update steps to 128 for $\mathcal{L}_{\text{PPO}}$. The α for $\mathcal{L}_{\text{forward}}$ is set to 1. Finally, we train the policy for 75M and 200M steps for *PointNav* and *ObjectNav* respectively and evaluate the model every 5 million steps.

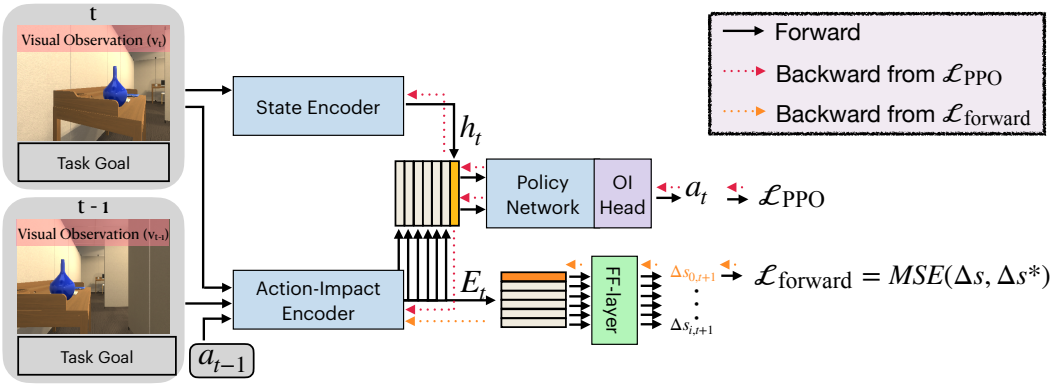

Figure 8: **Training Pipeline.** The forward pass is in black color, the backward from $\mathcal{L}_{\text{PPO}}$ is in red color, and the backward from $\mathcal{L}_{\text{forward}}$ is in orange color.

B SPL RESULTS

We show the quantitative results for *PointNav* and *ObjectNav* are shown in Fig. 9. As shown, the *SPL* of competing baselines achieve better results than AAP at the modest drifts ($d_r = \pm 15°, \pm 30°$), but they perform significantly worse at more severe drifts. On the other hand, our AAP achieves consistent *SPL* across all the drift changes and outperforms baselines remarkly. It is because AAP does not memorize action semantics, but relies on its experiences in the inference time to embed the action embeddings E on-the-fly. To collect useful experiences, the agent has to explore the environment and update the embeddings accordingly. Thereby, our AAP takes more time to understand the state-changes, while the baselines can achieve better results based on its learned action semantics in the scenarios with the modest drifts.

C QUALITATIVE RESULTS

We show more qualitative results in *PointNav* and *ObjectNav* in Fig. 10. The first example shows the agent adopts a smaller movement magnitude to avoid the collision. The second example shows smooth moves by a right-turn, a move, another left-turn, and a final move to dodge the white table. The third example shows the agent uses three left turns with different angles to make a disabled right turn. The fourth example shows the agent slows its movement magnitude as it approaches the target object in the clustered area. The fifth example shows the agent uses two left-turn with different angles to make a disabled right turn to find the target object. The final example shows the agent uses a larger movement magnitude to move toward the target object in a relatively open area.

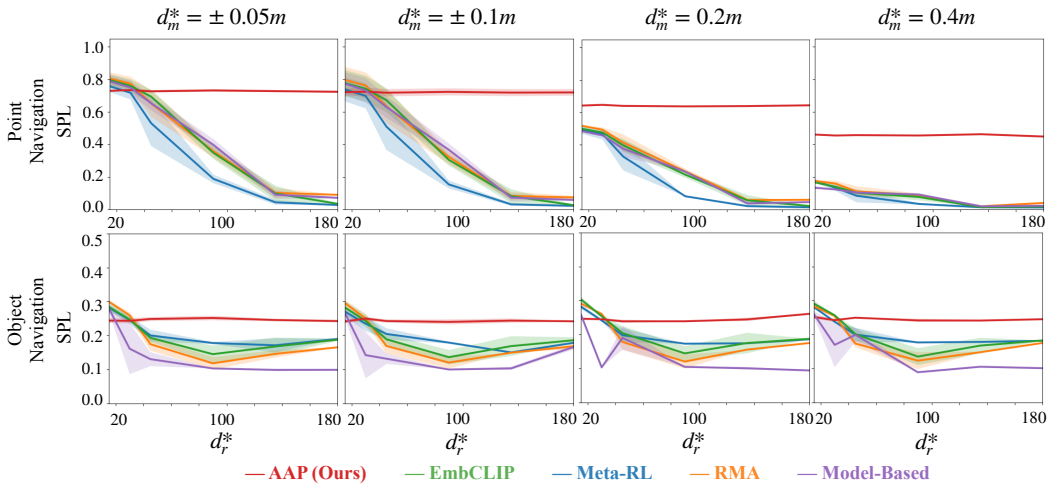

Figure 9: **Quantitative result using the SPL metric.** The *SPL* (Anderson et al., 2018) is defined as $\frac{1}{N}\sum_{n=1}^{N} S_n \frac{L_n}{max(P_n, L_n)}$, where N is the number of episodes, S_n denotes a binary indicator of success in the episode n, P_n is the path length, and L_n is the shortest path distance in episode n. Top: *PointNav* evaluation. Bottom: *ObjectNav* evaluation. We compare the proposed AAP with baselines, including EmbCLIP, Meta-RL, RMA, and Model-Based. We measure the *SPL* over different drifts, including $d_m^* = \{\pm 0.05, \pm 0.1, 0.2, 0.4\}$ and $d_r^* = \{\pm 15°, \pm 30°, \pm 45°, \pm 90°, \pm 135°, 180°\}$.

Figure 10: **Qualitative Results.** Examples of *PointNav* (top tree rows) and *ObjectNav* (bottom three rows). The agent adapts by rotating in the other direction to compensate for the disabled actions. The first example shows the agent adopts a smaller movement magnitude to avoid the collision. The second example shows smooth moves by a right-turn, a move, another left-turn, and a final move to dodge the white table. The third example shows the agent uses three left turns with different angles to make a disabled right turn. The fourth example shows the agent slows its movement magnitude as it approaches the target object in the clustered area. The fifth example shows the agent uses two left-turn with different angles to make a disabled right turn to find the target object. The final example shows the agent uses a larger movement magnitude to move toward the target object in a relatively open area.