Fragment Relation Networks for Geometric Shape Assembly

Anonymous Author(s)
Affiliation
Address
email

Abstract

Shapes can be composed of several fragments. Finding the best configuration for composition is an interesting problem for various applications, such as shape assembly and packing. However, prior work tackles limited cases: the shape of fragments are identical, or each component has unique textures that can be readily recognized and compared. We introduce a first learning-based approach for solving the challenging packing problem – it handles the textureless and arbitrary shape of fragments. Only fragments we can assemble and a current shape are provided. Our approach is equipped with a permutation-equivariant network, which can choose and place the next fragment regardless of the orders of the given fragments. The proposed architecture can determine the following fragment and its position without increasing the network parameters even if the number of fragments increases. We demonstrate that our method helps solve the problem in various circumstances on target geometric shapes and assembling scenarios.

1 Introduction

A composition of shape can create a new shape. Therefore, the shape composition or packing have been studied in many previous studies [15], since its great potentials in various research fields, such as biology [19], earth science [21], archaeology [8], and tiling puzzle [16]. The problem is often formulated as the optimization problem that attempts to fill up a target space with necessary objects [7]. Bin packing problem [3] minimizes the number of bins where instances to be filled up. The guarantee for near-optimal solutions in low-order polynomial time has been proved by [11].

An interesting aspect of such packing problems is that it can construct a target shape with a set of fragments. From this perspective, we interpret the packing problem as a *shape assembly problem*. Prior work usually relies on inherent patterns and textures provided with the fragments that would be assembled. For example, a jigsaw puzzle problem finds a correct combination by comparing and matching neighbors of each fragment where the fragments contain visual information [6]. However, if we assume visual information is not provided (i.e., losing color or discoloring for practical reasons) and a target geometric shape is partitioned at random (i.e., getting divided randomly or split by external forces), assembling geometric fragments is challenging. It is due to its properties are derived by the uniqueness of fragment shapes and the combinatorial aspect of fragments [5].

Therefore, we define a two-dimensional geometric shape assembly problem under the following assumptions. (i) Stochastic partitioning process [18] splits a given target geometric shape, and the shapes of fragments partitioned are distinct. (ii) All the fragments of a geometric shape are provided unless otherwise specified. For some assembling scenario, we will introduce, some fragment can be missing, eroded, or distorted. (iii) Fragments in a target geometric shape are assembled from bottom to top and from left to right. This assembling sequence of fragments determined by such a rule makes this problem more combinatorial and more realistic [4].

Submitted to 34th Conference on Neural Information Processing Systems (NeurIPS 2020). Do not distribute.

Under the scenario mentioned above, we can solve the shape assembly problem with one of (i) brute-force approach, (ii) metaheuristic [1], (iii) sequential model-based optimization approach [2], and (iv) learning-based approach [14]. Due to the combinatorial explosion, a brute-force approach is hard to assemble the target shape if the number of fragments increases. Moreover, both metaheuristic and sequential model-based optimization are not suitable to solve this problem, since such approaches are time-consuming for their inner loop steps. A learning-based approach is a good alternative, but generic neural networks need to adjust a model configuration if the dimensionalities of inputs and outputs are changed. For this reason, we propose a permutation-equivariant neural network whose configuration does not depend on the number of fragments and target shapes to resolve the issues.

2 Problem Definition

Geometric Shape Assembly Suppose that we are given a set of fragments $\mathcal{X} = \{\mathbf{x}_j\}_{j=1}^{N}$ and a target geometric shape S on a space Φ. In this work, we assume two-dimensional fragments and a target shape in a two-dimensional space. We sequentially assemble those fragments into the target shape; at each step, a fragment $\mathbf{x}_i$ is sampled without replacement and placed on the top of the current space $\mathbf{c}$ considering the remaining space $S - \mathbf{c}$. This procedure is described in Algorithm 1. Our goal is to reconstruct the target shape S consuming all the fragments.

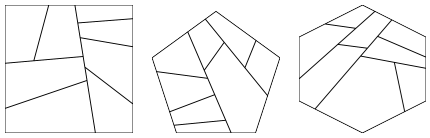

Figure 1: Shape fragmentation examples.

Shape Fragmentation Dataset We create a dataset by partitioning a shape into multiple fragments, which can be easily used to pose its reverse task, i.e., an assembly problem. Inspired by binary space partitioning algorithm [20], we stochastically split a target shape and create a set of random fragments for each target shape. The procedure is summarized in Algorithm 2 and some examples are shown in Figure 1. After K times of binary partitioning, we obtain $N = 2^K$ fragments.

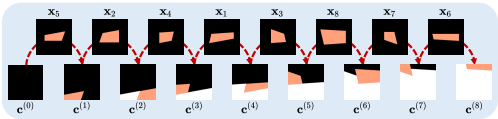

Figure 2: Assembling scenario. A fragment $\mathbf{x}$ is assembled into a shape $\mathbf{c}$. At every step, we have to select which fragment is assembled and where fragment is assembled.

3 Our Approach

To address the assembly problem, we propose a model that learns to select a fragment from candidates and place it on top of a current shape. The model takes two inputs: (i) remaining space $S - \mathbf{c}$, which is the result of assembled fragments at previous steps; (ii) fragments $\mathcal{X}$, which consists of all candidates for the next assembly. It then predicts which $\mathbf{x}_i \in \mathcal{X}$ should be used and where it should be placed on Φ. We assemble all the fragments by iteratively running our model until no candidate remains.

To make a proper decision, the model needs to extract geometric information of the fragments and the shape, and also understand the relations among them. We train our model by supervising it with a large number of episodes where a fragment and its position in the next time step is known from a current shape and candidate fragments. We generate such episodes from the shape fragmentation dataset by creating a sequence of fragments from the bottom left to the top right.

Fragment Relation Networks Our model, Fragment Relation Network (FRN), considers a candidate fragment $\mathbf{x}_i$ in the context of the other candidates $\mathcal{X} \setminus \mathbf{x}_i$ and the remaining space $S - \mathbf{c}$, and produces two outputs: (i) selection probability for $\mathbf{x}_i$, which means how likely $\mathbf{x}_i$ is selected. (ii) placement probability map for $\mathbf{x}_i$, which means how likely each position is for $\mathbf{x}_i$. As shown in Figure 3, FRN contains two branches for the two outputs, fragment selection network (i.e., FRN-Sel) and fragment placement network (i.e., FRN-Loc). Both networks share many learnable parameters that are parts of two encoders and Fragment Relation Attention Module (FRAM). FRAM, which is inspired by Transformer network [22], captures the relationship between the remaining fragments.

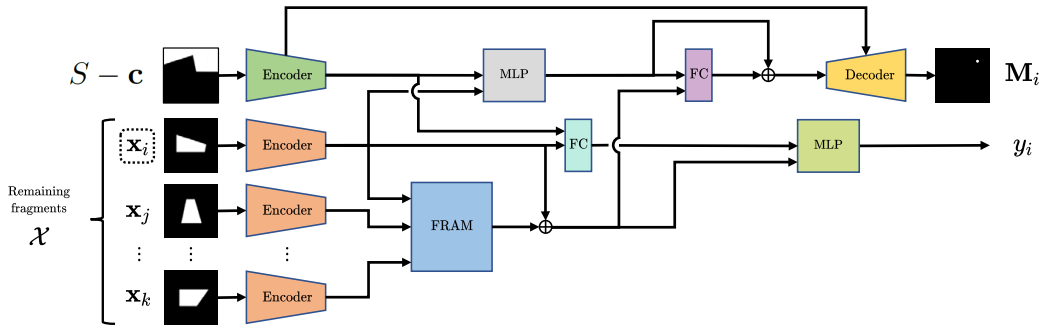

Figure 3: Overall architecture. Given remaining space $S - \mathbf{c}$ and the remaining fragments $\mathcal{X}$, a probability of the next fragment and its position are produced. An encoder (orange) for the remaining fragments is shared across fragments.

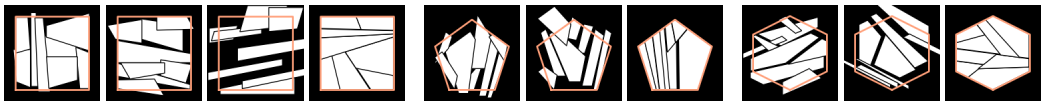

(a) `Square` assembly result (b) `Pentagon` assembly result (c) `Hexagon` assembly result

Figure 4: Assembling results for `Square`, `Pentagon` and `Hexagon` shape. Orange boxes represent target shapes. The first is simulated annealing, the second is bayesian optimization, (the third is V-GAN) and the last is ours

Fragment Selection FRN-Sel (lower part of Figure 3) is a binary classifier taking as input $\mathbf{x}_i, S-\mathbf{c}$, and $\mathcal{X} \setminus \mathbf{x}_i$: $y_i = \text{FRN-Sel}\left(\mathbf{x}_i; S - \mathbf{c}, \mathcal{X} \setminus \mathbf{x}_i\right) \in \mathbb{R}$, where $\mathbf{x}_i \in \mathcal{X}$. Since, in particular, FRN-Sel takes into account fragment relations with FRAM, it can choose the next fragment by considering the remains of fragments. Furthermore, as will be discussed in the Discussion section, the number of parameters in FRN does not depend on the number of fragments, which implies that the cardinality of $\mathcal{X}$ can be varied. This property helps our network to handle variable-length set of fragments.

Fragment Placement FRN-Loc (upper part of Figure 3) determines the position of $\mathbf{x} \in \mathcal{X}$ by predicting a probability map over pixels: $\mathbf{M}_i = \text{FRN-Loc}\left(\mathbf{x}_i; S - \mathbf{c}, \mathcal{X} \setminus \mathbf{x}_i\right) \in \mathbb{R}^{w \times h}$. This network is implemented as an encoder-decoder architecture with skip connections between them, in order to compute pixel-wise probabilities with convolution and transpose convolution operations. It can reduce the number of learnable parameters due to the absence of the last fully-connected layer.

Fragment Relation Attention Module We suggest an attention-based module FRAM, which considers the high-order relationship between the remaining fragments using multi-head attention networks [22]. First of all, we introduce multi-head attention and scaled dot-product attention. As proposed by Vaswani et al. [22], given $\mathbf{X} \in \mathbb{R}^{n_1 \times d}$ and $\mathbf{Y} \in \mathbb{R}^{n_2 \times d}$, multi-head attention is composed of multiple scaled dot-product attentions: $\text{DP}(\mathbf{Q}, \mathbf{K}, \mathbf{V}) = \sigma\left(\frac{\mathbf{Q}\mathbf{K}^\top}{\sqrt{d_1}}\right)\mathbf{V}$ and $\text{MH}(\mathbf{X}, \mathbf{Y}, \mathbf{Y}) = [\text{DP}_1, \ldots, \text{DP}_h]\mathbf{W}^O$, where $\mathbf{Q} \in \mathbb{R}^{n_1 \times d_1}$, $\mathbf{K} \in \mathbb{R}^{n_2 \times d_1}$, $\mathbf{V} \in \mathbb{R}^{n_2 \times d_2}$, $\text{DP}_i = \text{DP}(\mathbf{X}\mathbf{W}_i^{\mathbf{Q}}, \mathbf{Y}\mathbf{W}_i^{\mathbf{K}}, \mathbf{Y}\mathbf{W}_i^{\mathbf{V}})$, σ is a softmax function, h is the number of heads, and $\mathbf{W}^O \in \mathbb{R}^{hd_2 \times d}$ is the learnable parameters. To leverage the expression power of this multi-head attention module, $\mathbf{X}$ and $\mathbf{Y}$ are projected by the different parameter sets $\mathbf{W}^{\mathbf{Q}} \in \mathbb{R}^{d \times d_1}$, $\mathbf{W}^{\mathbf{K}} \in \mathbb{R}^{d \times d_1}$, and $\mathbf{W}^{\mathbf{V}} \in \mathbb{R}^{d \times d_2}$.

To express a set of the remaining fragments to a latent representation $\mathbf{h}$, we utilize the multi-head attention: $\mathcal{H} = \text{MH}(\mathcal{X}, \mathcal{X}, \mathcal{X}) \in \mathbb{R}^{|\mathcal{X}| \times d}$ and $\mathbf{h} = \text{MH}(\mathbf{1}, \mathcal{H}, \mathcal{H}) \in \mathbb{R}^d$, where $\mathbf{1} \in \mathbb{R}^{1 \times d}$ is an all-ones matrix. Without loss of generality, the aforementioned equations can take $\mathcal{X}$ and $\mathcal{H}$, respectively. Moreover, $\text{MH}(\mathcal{X}, \mathcal{X}, \mathcal{X})$ can be stacked by feeding $\mathcal{H}$ to the multi-head attention as an

input, and $\mathrm{MH}(\mathbf{1}, \mathcal{H}, \mathcal{H})$ can be also stacked in the similar manner. Note that $\mathbf{h}$ becomes $\mathbb{R}^{1\times d}$, but we straightforwardly employ it as a $\mathbb{R}^d$-shaped representation.

FRAM is a generalization of global feature aggregation methods such as average pooling and max pooling across instances, so that it considers high-order interaction between instances and aggregates intermediate instance-wise representations (i.e., $\mathcal{H}$) with learnable parameters. The final output is determined by selecting the fragment with the index of maximum y_i: $i^\star = \arg\max_{i\in\{1,\ldots,|\mathcal{X}|\}} y_i$. After choosing the fragment, the position with the maximum probability on $\mathbf{M}_{i^\star}$ is selected for the placement.

4 Experimental Results

Experimental Setup As shown in Figure 1, we evaluate our method and the existing methods on three types of target shapes: (i) `Square`, (ii) `Pentagon`, and (iii) `Hexagon`. Unless otherwise specified, we use 5,000 examples each of them is partitioned into 8 fragments using binary space partitioning. We use 64%, 16%, and 20% of the examples for training/validation/test dataset respectively.

Note that there is no prior methods that tackle shape assembly for textureless fragments. Therefore, we apply two types of classic optimization methods for this task. Besides, we apply an approach that is based on generative adversarial networks. Due to a page limit, the architectures of FRN and V-GAN will be presented in the appendices. We measure an assembling quality via IoU: $\mathrm{IoU}(\mathbf{c}, S) = \frac{\mathrm{area}(\mathbf{c}\cap S)}{\mathrm{area}(\mathbf{c}\cup S)}$, where $\mathbf{c}$ is an assembled shape and S is a target shape.

Main Result We compare our approach to other baseline methods on the assembly of different target shapes. Results on `Square`, `Pentagon`, and `Hexagon` shapes are summarized in Table 1.

V-GAN requires a fixed number of vertices for partitioned fragments, which is only applicable to the square target shape. We find that our method consistently covers much more area than baselines within less time budget. Both simulated annealing and Bayesian optimization struggle to place fragments in the right position, resulting in the many overlap between fragments. They also take a much longer time compared to our method in all experimental conditions. On the other hand, V-GAN takes much less time than other baseline methods while significantly underperforms compared to other methods. Qualitative results are presented in Figure 4.

Table 1: Quantitative results on `Square`, `Pentagon`, and `Hexagon` shape.

		mIoU	**Time**
`Square`	SA	0.8524	2,700 sec.
	BayesOpt	0.8329	1,180 sec.
	V-GAN	0.5615	**< 1 sec.**
	Ours	**0.8938**	**< 1 sec.**
`Pentagon`	SA	0.8349	2,584 sec.
	BayesOpt	0.7812	1,240 sec.
	V-GAN	N/A	
	Ours	**0.9262**	**< 1 sec.**
`Hexagon`	SA	0.8230	2,520 sec.
	BayesOpt	0.7745	1,210 sec.
	V-GAN	N/A	
	Ours	**0.9323**	**< 1 sec.**

5 Conclusion

In this paper, we solve a two-dimensional shape assembly problem with our proposed neural network FRN. FRN predicts the next fragment and its position where the fragments that would be assembled are given, by considering fragment relations with an attention-based module FRAM. We show that our method outperforms other baseline methods such as simulated annealing, Bayesian optimization, and a simple learning-based approach with adversarial training. Moreover, we evaluate our methods with different target geometric shapes.

References

[1] I. Boussaïd, J. Lepagnot, and P. Siarry. A survey on optimization metaheuristics. *Information Sciences*, 237:82–117, 2013.

[2] E. Brochu, V. M. Cora, and N. de Freitas. A tutorial on Bayesian optimization of expensive cost functions, with application to active user modeling and hierarchical reinforcement learning. *arXiv preprint arXiv:1012.2599*, 2010.

[3] A. R. Brown. *Optimum packing and depletion*. Macdonald and Co.; New York, American Elsevier, 1971.

[4] B. Chazelle. The bottomn-left bin-packing heuristic: An efficient implementation. *IEEE Transactions on Computers*, C-32(8):697–707, 1983.

[5] P. Chen, Z. Fu, A. Lim, and B. Rodrigues. Two-dimensional packing for irregular shaped objects. In *Proceedings of the Hawaii International Conference on System Sciences*, 2003.

[6] T. S. Cho, S. Avidan, and W. T. Freeman. A probabilistic image jigsaw puzzle solver. In *Proceedings of the IEEE International Conference on Computer Vision and Pattern Recognition (CVPR)*, pages 183–190, 2010.

[7] E. G. Coffman, M. R. Garey, and D. S. Johnson. Approximation algorithms for bin packing: A survey. *Approximation Algorithms for NP-hard Problems*, pages 46–93, 1996.

[8] N. Derech, A. Tal, and I. Shimshoni. Solving archaeological puzzles. *arXiv preprint arXiv:1812.10553*, 2018.

[9] I. J. Goodfellow, J. Pouget-Abadie, M. Mirza, B. Xu, D. Warde-Farley, S. Ozair, A. Courville, and Y. Bengio. Generative adversarial nets. In *Advances in Neural Information Processing Systems (NeurIPS)*, volume 27, pages 2672–2680, 2014.

[10] N. Guttenberg, N. Virgo, O. Witkowski, H. Aoki, and R. Kanai. Permutation-equivariant neural networks applied to dynamics prediction. *arXiv preprint arXiv:1612.04530*, 2016.

[11] D. S. Johnson. *Near-optimal bin packing algorithms*. PhD thesis, Massachusetts Institute of Technology, 1973.

[12] D. P. Kingma and J. L. Ba. ADAM: A method for stochastic optimization. In *Proceedings of the International Conference on Learning Representations (ICLR)*, 2015.

[13] J. Lee, Y. Lee, J. Kim, A. R. Kosiorek, S. Choi, and Y. W. Teh. Set Transformer: A framework for attention-based permutation-invariant neural networks. In *Proceedings of the International Conference on Machine Learning (ICML)*, pages 3744–3753, 2019.

[14] J. Li, J. Yang, A. Hertzmann, J. Zhang, and T. Xu. LayoutGAN: Synthesizing graphic layouts with vector-wireframe adversarial networks. *IEEE Transactions on Pattern Analysis and Machine Intelligence*, 2020.

[15] A. Lodi, S. Martello, and M. Monaci. Two-dimensional packing problems: A survey. *European Journal of Operational Research*, 141(2):241–252, 2002.

[16] M. Noroozi and P. Favaro. Unsupervised learning of visual representations by solving jigsaw puzzles. In *Proceedings of the European Conference on Computer Vision (ECCV)*, pages 69–84, 2016.

[17] M. Pincus. Letter to the editor – a Monte Carlo method for the approximate solution of certain types of constrained optimization problems. *Operations research*, 18(6):1225–1228, 1970.

[18] D. M. Roy and Y. W. Teh. The Mondrian process. In *Advances in Neural Information Processing Systems (NeurIPS)*, volume 21, pages 1377–1384, 2008.

[19] C. A. A. Sanches and N. Y. Soma. A polynomial-time DNA computing solution for the bin-packing problem. *Applied Mathematics and Computation*, 215(6):2055–2062, 2009.

[20] R. Schumacher. Study for applying computer-generated images to visual simulation. Technical Report AFHRL-TR-69-14, Air Force Human Resources Laboratory, Air Force Systems Command, 1969.

[21] T. H. Torsvik. The Rodinia jigsaw puzzle. *Science*, 300(5624):1379–1381, 2003.

[22] A. Vaswani, N. Shazeer, N. Parmar, J. Uszkoreit, L. Jones, A. N. Gomez, Ł. Kaiser, and I. Polosukhin. Attention is all you need. In *Advances in Neural Information Processing Systems (NeurIPS)*, volume 30, pages 5998–6008, 2017.

[23] M. Zaheer, S. Kottur, S. Ravanbakhsh, B. Poczos, R. R. Salakhutdinov, and A. J. Smola. Deep sets. In *Advances in Neural Information Processing Systems (NeurIPS)*, volume 30, pages 3391–3401, 2017.

Appendices

In this material, we describe the detailed contents that supplement our main article.

Appendix A Details of Shape Fragmentation

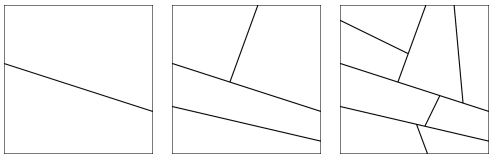

(a) Partitioning 1 (b) Partitioning 2 (c) Partitioning 3

Figure 5: Fragmentation examples on `Square` by the number of partitions.

We divide a target geometric shape into fragments using hyperplanes by a binary space partitioning algorithm [20]. The number of fragments increases exponentially with the number of partitions. Some partitioning examples are shown in Figure 5.

We create a shape fragmentation dataset under two constraints that prevent generating small fragments. First, the hyperplane does not cross adjacent edges of the given polygon. Second, the position that the hyperplane will pass through is randomly selected between the range of $\pm$ 25% of edge length from the center of the edge. The dataset we used is composed of 5000 samples.

Appendix B Algorithms

The algorithms described in the main article are represented in Algorithm 1 and Algorithm 2.

Algorithm 1 Geometric Shape Assembly Procedure

Input: fragments $\mathcal{X} = \{\mathbf{x}_i\}_{i=1}^{N}$ and a target shape S
Output: output shape $\mathbf{c}$.

```
Initialize current shape c (as null) on a space Φ.
Initialize remaining shape S − c
while X ≠ ∅ do
    Select a fragment x_i ∈ X and place it on Φ.
    c ← shape c updated by the placement of x_i.
    Calculate the remaining shape S − c.
    X ← X \ x_i
end while
return c
```

Appendix C Details of Experiment

C.1 Training

We alternately train our neural network with the following objectives. Since we first choose the next fragment, and then place the selected fragment, the gradient updates by two objectives should be

Algorithm 2 Shape Fragmentation

Input: A target shape S, the number of partitions K.

Output: Fragments partitioned $\mathcal{X}_K = \{\mathbf{x}_i\}_{i=1}^{2^K}$.

```
function partitionFragment(x)
    Choose where to partition.
    Partition x to x_+, x_-.
    return x_+, x_-
end function

X_0 = {S}.
for i = 1, ..., K do
    X_i = {}
    for all x ∈ X_{i-1} do
        x_+, x_- = partitionFragment(x)
        X_i ← X_i + {x_+, x_-}
    end for
end for
return a set of fragments X_K
```

separately applied. The objective for the fragment selection part is

$$\mathcal{L}_{\text{select}} = \sum_{m=1}^{M} -\mathbf{t}_m^\top \log \sigma(\mathbf{y}_m), \tag{1}$$

where $\mathbf{t}_m$ is a one-hot representation of true fragment, each entry of $\mathbf{y}_m$ is computed by FRN-Sel, and σ is a softmax function.

Next, the objective for the fragment placement part is

$$\mathcal{L}_{\text{place}} = \sum_{m=1}^{M} -\text{vector}(\boldsymbol{\tau}_m)^\top \log \text{vector}(\mathbf{M}_m), \tag{2}$$

where $\boldsymbol{\tau}_m \in \mathbb{R}^{w \times h}$ is a one-hot representation of true position, $\mathbf{M}_m$ is computed by FRN-Loc, and vector is a function for vectorizing a matrix.

Both Eq. (1) and Eq. (2) compute the summation of the cross-entropy over outputs that produce through a permutation-equivariant network for logits. As will be described in the subsequent sections, this property let us examine FRN in various circumstances. Moreover, since our network does not rely on the sequence (or history) of fragments, we are able to apply a mini-batch training scheme, which enables us to train offline.

C.2 Baselines

We select the following three baseline methods:

- Simulated annealing (SA) [17]: It solves the problem via optimization. SA computes the overlap to a target shape;
- Bayesian optimization (BayesOpt) [2]: A powerful method to optimize a black-box function. We find the position of given fragments to maximize the overlap between each fragment and a target shape;
- LayoutGAN modified for vertex inputs (V-GAN) [14]: It is a modification of [14]. Since LayoutGAN assumes that fragment shapes are always fixed and only finds their positions, we modify the generator structure to a neural network that takes fragment vertices and predicts their positions. This baseline is composed of the generator, and the discriminator that distinguishes real and fake examples is trained via an adversarial training strategy.

C.3 Details of Model Architecture

C.3.1 FRN

FRN consists of FRN-Sel that selects next fragment and FRN-Loc that predicts center coordinates of the chosen fragment. There exist 7 hyperparameters in FRN with 3 specifically in FRAM. The default dimension of fully connected layer in the whole pipeline is fixed to 256 throughout the experiments. For the training, we use batch size of 32 and ADAM optimizer [12] for both FRN-Sel and FRN-Loc with learning rate of 5×10^{-4} and 2×10^{-3} respectively. FRN-Sel is a convolutional neural network (CNN) followed by FRAM and MLP block. FRN-Loc is convolutional encoder-decoder with MLP block followed by an additional fully-connected layer inserted in between. Each encoder for FRN-Loc and FRN-Sel do not share the weights, and thus are trained with different loss. Our FRAM follows similar setting of original Transformer [22] model with 2048 hidden units and 8 attention heads.

C.3.2 V-GAN

This model follows typical setup of generative adversarial network [9], having both generator and discriminator. Specifically, generator takes fragment's vertex coordinates as input and predicts center coordinates. Discriminator then makes real or fake decision based on adjusted vertex coordinates. For training, we use batch size of 128 and ADAM optimizer with learning rate of 1×10^{-4}.

Appendix D Discussion and Related Work

In this section, we discuss the properties of our problem and FRN, based on the numerical results. Moreover, we mention about the previous studies related to our work.

As presented in Table **??**, the coverage result that assembles `Hexagon` is better than the results for `Square` and `Pentagon`. It implies that if a target shape becomes complicated and contains more information, the problem becomes easily solvable. From this observation, we can readily induce our formulation to the packing problem with inherent information such as [6] and [16].

Our proposed network FRN can be thought as a permutation-equivariant network, which satisfies

$$f(\pi([\mathbf{x}_1, \ldots, \mathbf{x}_n]^\top)) = \pi[f([\mathbf{x}_1, \ldots, \mathbf{x}_n]^\top)], \tag{3}$$

where $f : \mathbb{R}^{n \times d} \to \mathbb{R}^{n \times d'}$ is a neural network that outputs a set and π is a permutation function along the first dimension. Guttenberg et al. [10] suggest a permutational layer to handle the different inputs and not depend on the specific ordering of inputs. Zaheer et al. [23] derive the necessary and sufficient conditions on permutation-equivariant networks. Lee et al. [13] propose an attention-based permutation-equivariant block for set operations.

By this definition of permutation-equivariance, we can describe the following proposition for FRN:

Proposition 1 *By the shared architecture over the remaining fragments $\mathcal{X}$, FRN is permutation-equivariant. In particular, the number of learnable parameters does not depend on the dimensionality of logits $\mathbf{y}$ and the shape of position probability $\mathbf{M}_i$ for $i \in \{1, \ldots, |\mathcal{X}|\}$.*

As computed by FRN-Sel and FRN-Loc, their outputs can handle variable-sized $\mathcal{X}$ and the ordering of $\mathcal{X}$ affects the ordering of the outputs, satisfying Eq. (3). The experimental results support that our method can learn this challenging scenario with the permutation-equivariant neural network.