ABC: Auxiliary Balanced Classifier for Class-imbalanced Semi-supervised Learning

Anonymous Author(s)
Affiliation
Address
email

Abstract

Existing semi-supervised learning (SSL) algorithms typically assume class balanced datasets although the class distribution of many real-world datasets is imbalanced. In general, classifiers trained on a class-imbalanced dataset are biased toward majority classes. This issue becomes more problematic for SSL algorithms because they utilize biased prediction of unlabeled data for training. However, traditional class-imbalanced learning techniques, which are designed for labeled data, are not readily combinable with SSL algorithms. We propose a scalable class-imbalanced SSL algorithm that can effectively use unlabeled data while mitigating class imbalance by introducing an auxiliary balanced classifier (ABC) of a single layer, which is attached to a representation layer of an existing SSL algorithm. The ABC is trained on a class-balanced subset of a minibatch generated by a mask, while using high-quality representations learned from all data points in the minibatch using a backbone SSL algorithm to avoid overfitting and information loss. Moreover, we use consistency regularization, a recent SSL technique to utilize unlabeled data, in a modified way to train the ABC to be balanced among the classes by selecting unlabeled data with the same probability for each class. The proposed algorithm achieves state-of-the-art performance on various class-imbalanced SSL experiments using four benchmark datasets.

1 Introduction

Recently, numerous deep neural network (DNN) based semi-supervised learning (SSL) algorithms have been proposed to improve the performance of DNNs by utilizing unlabeled data when only a small amount of labeled data is available, and have shown effective performances on various tasks. However, most existing SSL algorithms typically assume class balanced datasets, although the class distribution of many real-world datasets is imbalanced. It is well known that classifiers trained on class-imbalanced data tend to be biased toward the majority classes. This issue can be more problematic for SSL algorithms that use predicted labels of unlabeled data for their training, because the predicted labels from the algorithm trained on class-imbalanced data become even more severely imbalanced [18]. For example, Figure 1 (b) presents biased predictions of ReMixMatch [3], a recent SSL algorithm, trained on CIFAR-10, which is a class-imbalanced dataset with the amount of Class 0 being 100 times more than that of Class 9 as depicted in Figure 1 (a). Although there are various class-imbalanced learning techniques, they are usually designed for labeled data and thus cannot be simply combined with SSL algorithms under class-imbalanced SSL (CISSL) scenarios. Recently, a few CISSL algorithms have been proposed, but the CISSL problem is still under-explored.

We propose a new CISSL algorithm that can effectively use unlabeled data while mitigating class imbalance by using an existing DNN based SSL algorithm [3, 29] as the backbone and introducing an auxiliary balanced classifier (ABC) of a single layer. The ABC is attached to a representation layer immediately preceding the classification layer of the backbone, based on the argument that a

Submitted to 35th Conference on Neural Information Processing Systems (NeurIPS 2021). Do not distribute.

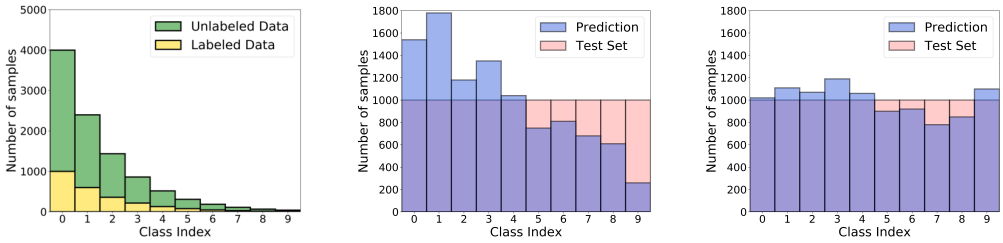

(a) Class-imbalanced training set (b) ReMixMatch (c) Proposed algorithm

Figure 1: Predictions on a class-balanced test set using ReMixMatch (b) and the proposed algorithm (c) trained on a class-imbalanced training set (a).

classification algorithm (i.e., backbone) can learn high-quality representations even if its classifier is biased toward majority classes [17]. The ABC is trained to be balanced across all classes by using a mask that re-balances the class distribution, similar to re-sampling in previous SSL studies [2, 7, 13, 16]. Specifically, the mask stochastically re-generates a class-balanced subset of a minibatch on which the ABC is trained. The ABC is trained simultaneously with the backbone, so that the ABC can use high-quality representations learned from all data points in the minibatch using the backbone. In this way, the ABC can overcome the limitations of the previous re-sampling techniques, overfitting on minority-class data or losing information on majority-class data [6, 27].

Moreover, to place decision boundaries in low-density regions by utilizing unlabeled data, we use consistency regularization, a recent SSL technique, which enforces the classification outputs of two augmented or perturbed versions of the same unlabeled example remain unchanged. In particular, we encourage the ABC to be balanced across the classes in using consistency regularization by selecting the unlabeled examples with the same probability for each class using a mask. Figure 1 (c) illustrates that compared to the results of ReMixMatch in Figure 1 (b), the class distribution of the predicted labels becomes more balanced using the proposed algorithm trained on the same dataset. Our experimental results under various scenarios demonstrate that the proposed algorithm achieves state-of-the-art performance. Through qualitative analysis and ablation study, we further investigate the contribution of each component of the proposed algorithm.

2 Related Work

Semi-supervised learning (SSL) Recently, several SSL techniques to utilize unlabeled data have been proposed. Entropy minimization [12] encourages the classifier outputs to have low-entropy for unlabeled data as in pseudo labels [22]. Mixup regularization [4, 32] makes the decision boundaries farther away from the data clusters by encouraging the prediction for an interpolation of two inputs to be the same as the interpolation of the prediction for each input. Consistency regularization [26, 24, 30] encourages a classifier to produce similar predictions for perturbed versions of the same unlabeled input. To make perturbed unlabeled inputs, various data augmentation techniques have been used. For example, FixMatch [29] and ReMixMatch [3] used strong augmentation such as Cutout [10] and RandomAugment [8]. FixMatch and ReMixMatch are used as the backbone of the proposed algorithm. We describe FixMatch and ReMixMatch in more detail in Section 3.2.

Class-imbalanced learning (CIL) A popular approach for CIL, re-sampling techniques [16, 7, 2, 13] balance the number of training samples for each class in the training set. As another popular approach, re-weighting techniques [23, 14, 33] re-weight the loss for each class by a factor inversely proportional to the number of data points belonging to that class. Although these approaches are simple, they have some drawbacks. For example, oversampling from minority classes can cause overfitting, whereas undersampling from majority classes can cause information loss [6]. In the case of re-weighting, gradients can be calculated abnormally largely when the class imbalance is severe, resulting in unstable training [6, 1]. There have been many efforts to alleviate these problems, such as effective re-weighting [9] and meta-learning based re-weighting [28, 15]. New forms of losses were also proposed [6, 27]. [36, 19] transferred the knowledge from the data of majority classes to the data of minority classes. Recently, [17] found that biased classification is mainly due to the classification layer and that a classification algorithm can learn meaningful representations even from a class-imbalanced training set. Based on this finding, we make the ABC use high-quality representations learned from class-imbalanced data using FixMatch [29] and ReMixMatch [3].

Class-imbalanced semi-supervised learning (CISSL) There have been few studies on CISSL. [35] found that more accurate decision boundaries can be obtained in class-imbalanced settings through self-supervised learning and semi-supervised learning. DARP [18] refines biased pseudo labels by solving a convex optimization problem. CReST [34], a recent self-training technique, mitigates class imbalance by using pseudo-labeled unlabeled data points classified as minority classes with a higher probability than those classified as majority classes.

3 Methodology

3.1 Problem setting

Suppose that we have a labeled dataset $\mathcal{X} = \{(x_n, y_n) : n \in (1, ..., N)\}$, where $x_i \in \mathbb{R}^d$ is the ith labeled data point and $y_i \in \{1, \ldots, L\}$ is the corresponding label. We also have an unlabeled dataset $\mathcal{U} = \{(u_m) : m \in (1, \ldots, M)\}$, where $u_i \in \mathbb{R}^d$ is the ith unlabeled data point. We express the ratio of the amount of labeled data as $\beta = \frac{N}{M+N}$. Generally, $\beta < 0.5$ because label acquisition is costly and laborious. We denote the number of labeled data points of class l as N_l, i.e., $\sum_{l=1}^{L} N_l = N$, and assume that the L classes are sorted according to cardinality in descending order, i.e., $N_1 \geq N_2 \geq \cdots \geq N_L$. We denote the ratio of class imbalance as $\gamma = \frac{N_1}{N_L}$. Under class-imbalanced scenarios, $\gamma \gg 1$. Following the previous CIL studies, we define the half of the classes containing a large amount of data as the majority classes, and the other half of the classes containing a small amount of data as the minority classes. Following [34], we assume that $\mathcal{X}$ and $\mathcal{U}$ share the same class distribution, i.e., the labeled and unlabeled datasets are class imbalanced to the same extent. From $\mathcal{X}$ and $\mathcal{U}$, we generate minibatches $\mathcal{MB}_{\mathcal{X}} = \{(x_b, y_b) : b \in (1, ..., B)\} \subset \mathcal{X}$ and $\mathcal{MB}_{\mathcal{U}} = \{(u_b) : b \in (1, \ldots, B)\} \subset \mathcal{U}$ for each iteration of training, where B is the minibatch size. Using these minibatches for training, We aim to learn a model $f : \mathbb{R}^d \rightarrow \{1, ...L\}$ that perform effectively on a class-balanced test set.

3.2 Backbone SSL algorithm

We attach the ABC to the backbone's representation layer, so that it can utilize the high-quality representations learned by the backbone. We use FixMatch [29] or ReMixMatch [3] as the backbone, as these two have achieved state-of-the-art SSL performances. FixMatch uses the classification loss calculated from weakly augmented labeled data point $\alpha(x_b)$ generated by flipping and cropping the image, and the consistency regularization loss calculated from weakly augmented unlabeled data point $\alpha(u_b)$ and strongly augmented unlabeled data point $\mathcal{A}(u_b)$ generated by Cutout [10] and RandomAugment [8]. ReMixMatch predicts the class label of weakly augmented unlabeled data point $\alpha(u_b)$ using the distribution alignment and sharpening, and assigns the predicted label to strongly augmented unlabeled data point $\mathcal{A}(u_b)$. These strongly augmented unlabeled data point $\mathcal{A}(u_b)$ and strongly augmented labeled data point $\mathcal{A}(x_b)$ are used to conduct mixup regularization. ReMixMatch also conducts consistency regularization in a similar manner as FixMatch and self-supervised learning using rotation of the image [11, 39]. FixMatch and ReMixMatch have greatly improved the SSL performance by learning high-quality representations using strong data augmentation. However, these algorithms can be significantly biased toward the majority classes in the class-imbalanced settings.

Using the FixMatch and ReMixMatch as the backbone of the proposed algorithm, we ensure the ABC to enjoy high-quality representations learned by the backbone, while letting it replace the backbone's biased classifier. For training of the ABC, we re-use the weakly augmented data and strongly augmented data used by the backbone to decrease the computational cost. Although we use FixMatch and ReMixMatch as the backbone in this study, the ABC can be also combined with other DNN based SSL algorithms as long as they use weakly augmented data and strongly augmented data.

3.3 ABC for class-imbalanced Semi-supervised learning

To train the ABC to be balanced, we first generate $0/1$ mask $M(x_b)$ for each labeled data point x_b using a Bernoulli distribution $\mathcal{B}(\cdot)$ with the parameter set to be inversely proportional to the number of data points of each class. This setting makes $\mathcal{B}(\cdot)$ generate a mask 1 with a high probability for the data points in the minority classes but with a low probability for those in the majority classes. Then, the classification loss is multiplied by the generated mask, so that the ABC can be trained with a balanced classification loss. Multiplying the classification loss by the $0/1$ mask can be interpreted as oversampling for the data points in the minority classes, whereas it can be interpreted as undersampling for those in the majority classes. In representation learning, oversampling and

undersampling techniques have shown overfitting and information loss problems, respectively. In contrast, the ABC can overcome these problems because it uses the representations learned by the backbone, which is trained on all data points in the minibatch. The overall procedure of balanced training with $0/1$ mask for the ABC attached to a representation layer of the backbone is presented in Figure 2. The classification loss for the ABC, L_{cls}, with $0/1$ mask $M(\cdot)$ is expressed as

$$L_{cls} = \frac{1}{B}\sum_{b=1}^{B} M(x_b)\,\mathbf{H}\left(p_s\left(y|\alpha(x_b)\right), p_b\right), \quad M(x_b) = \mathcal{B}\left(\frac{N_{y_b}}{N_L}\right),$$

where $\mathbf{H}$ is the standard cross entropy loss, $\alpha(x_b)$ is an augmented labeled data point, $p_s\left(y|\alpha(x_b)\right)$ is the predicted class distribution using the ABC for $\alpha(x_b)$, and p_b is the one hot label for x_b.

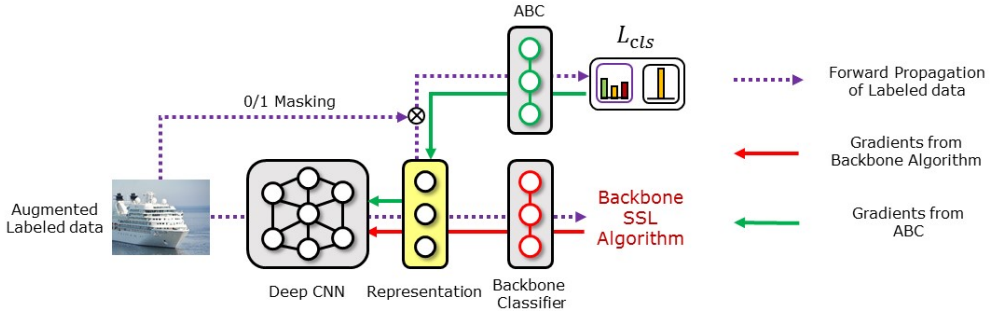

Figure 2: Overall procedure of balanced training with $0/1$ mask for the ABC

3.4 Consistency regularization for ABC

To increase the margin between the decision boundary and data points using unlabeled data, we conduct consistency regularization for the ABC, similar to the way in FixMatch. Specifically, we first obtain the predicted class distribution $p_s\left(y|\alpha(u_b)\right)$ for a weakly augmented unlabeled data point $\alpha(u_b)$ using the ABC and use it as a soft pseudo-label q_b. Then, for two strongly augmented unlabeled data points $\mathcal{A}_1(u_b)$ and $\mathcal{A}_2(u_b)$, we train the ABC to produce their predicted class distributions, $p_s\left(y|\mathcal{A}_1(u_b)\right)$ and $p_s\left(y|\mathcal{A}_2(u_b)\right)$, to be close to q_b.

In class-imbalanced settings, because most unlabeled data points belong to majority classes, most weakly augmented unlabeled data points can be predicted as majority classes. Then, consistency regularization would be conducted with a higher frequency for the majority classes, which can cause a classifier to be biased toward the majority classes. To prevent this issue, we conduct consistency regularization in a modified manner that is suitable for class-imbalance problems. Specifically, whereas FixMatch minimizes entropy by converting the predicted class distribution for a weakly augmented data point into a one-hot pseudo label, we directly use the predicted class distribution as a soft pseudo label. We do not pursue entropy minimization for the ABC because it can accelerate biased classification toward certain classes. Moreover, we once again generate $0/1$ mask $M(\cdot)$ for each unlabeled data point u_b based on a soft pseudo label q_b, and multiply the consistency regularization loss for u_b by the generated mask, so that the ABC can be trained with a class-balanced consistency regularization loss. Note that existing re-sampling techniques are not applicable to unlabeled data because they require the label for each data point. In contrast, we make it possible to re-sample unlabeled data by using the soft pseudo label and $0/1$ mask. To prevent the overbalance problem due to unlabeled data misclassified as minority classes, we gradually decrease the parameter of the Bernoulli distribution $\mathcal{B}(\cdot)$ for u_b from 1 to $N_{\widehat{q}_b}/N_L$, where $\widehat{q}_b$ is one-hot pseudo label obtained from q_b. The consistency regularization loss, L_{con}, with $0/1$ mask $M(\cdot)$ is expressed as

$$L_{con} = \frac{1}{B}\sum_{b=1}^{B}\sum_{k=1}^{2} M(u_b)\,\mathbf{I}\left(\max(q_b) \geq \tau\right)\mathbf{H}\left(p_s\left(y|\mathcal{A}_k(u_b)\right), q_b\right), \quad M(u_b) = \mathcal{B}\left(\frac{N_{\widehat{q}_b}}{N_L}\right),$$

where $\mathbf{I}$ is the indicator function, $\max(q_b)$ is the highest predicted assignment probability for any class, representing the confidence of prediction, and τ is the confidence threshold. To avoid unwanted effects of inaccurate soft pseudo-labels during consistency regularization, we only use the weakly augmented unlabeled data points whose confidence is higher than threshold τ, similar to FixMatch. Following previous studies [3, 24, 29, 4], we do not backpropagate gradients for pseudo label prediction. The overall procedure of consistency regularization for the ABC is shown in Appendix A.

3.5 End-to-end training

Unlike a recent CIL trend to finetune a classifier in a balanced manner after representation learning is finished (i.e., decoupled learning of representations and a classifier) [17, 27], we obtain a balanced classifier by training the proposed algorithm end-to-end. We train the proposed algorithm with the sum of losses from Sections 3.3 and 3.4, and the loss for the backbone, L_{back}. The total loss function L_{total} is expressed as

$$L_{total} = L_{cls} + L_{con} + L_{back}.$$

Whereas we use the sum of the losses for the backbone and ABC for training the proposed algorithm, we predict the class labels of new data points using only the ABC. In our experiments in Sections 4.4 and 4.5, we show that the proposed algorithm trained end-to-end produces better performance than competing algorithms with decoupled learning of representations and a classifier, and we analyze possible reasons. We present the pseudo code of the proposed algorithm in Appendix B.

4 Experiments

4.1 Experimental setup

We make class-imbalanced versions of CIFAR-10, CIFAR-100 [21], and SVHN [25] datasets to conduct experiments under various ratios of class imbalance γ and various ratios of the amount of labeled data β. For class-imbalance types, we first consider long-tailed (LT) imbalance in which the number of data points exponentially decreases from the largest class to the smallest class, i.e., $N_k = N_1 \times \gamma^{-\frac{k-1}{L-1}}$, where $\gamma = \frac{N_1}{N_L}$. We also consider step imbalance [5] in which the whole majority classes have the same amount of data and the whole minority classes also have the same amount of data. Two types of class imbalance for the considered datasets are illustrated in Appendix C. For the main setting, we set $\gamma = 100$, $N_1 = 1000$, and $\beta = 20\%$ for CIFAR-10 and SVHN, and $\gamma = 20$, $N_1 = 200$ and $\beta = 40\%$ for CIFAR-100. Similar to [18], we set γ of CIFAR-100 relatively small because CIFAR-100 has only 500 training data points for each class. To evaluate the performance of the proposed algorithm on large scale datasets, we also conducted experiments on 7.5M data points of 256 by 256 images from the LSUN dataset [37].

We compared the performance of the proposed algorithm with those of various baseline algorithms. Specifically, we considered the following baseline algorithms:

- Deep CNN (vanilla algorithm): This is trained on only labeled data with the cross entropy loss.
- BALMS [27] (CIL algorithm): This state-of-the-art CIL algorithm does not use unlabeled data.
- VAT [24], ReMixMatch [3], and FixMatch [29] (SSL algorithms): These are state-of-the-art SSL algorithms but do not consider class imbalance.
- FixMatch+CReST+PDA and ReMixMatch+CReST+PDA (CISSL algorithms): CReST+PDA [34] mitigates class imbalance by using unlabeled data points classified as the minority classes with a high probability than those classified as the majority classes.
- ReMixMatch+DARP and FixMatch+DARP (CISSL algorithms): These algorithms use DARP [18] to refine the pseudo labels obtained from ReMixMatch or FixMatch.
- ReMixMatch+DARP+cRT and FixMatch+DARP+cRT (CISSL algorithms): Compared to ReMix-Match+DARP and FixMatch+DARP, these algorithms finetune the classifier using cRT [17].

For the structure of the deep CNN used in the proposed and baseline algorithms, we used Wide ResNet-28-2 [38]. We trained the proposed algorithm for $250,000$ iterations with batch size of 64 and confidence threshold τ of 0.95. We used the Adam optimizer [20] with learning rate of 0.002, and used Cutout [10] and RandomAugment [8] for strong data augmentation, following [18]. Similar to [3, 4], we evaluated the performance of the proposed algorithm using an exponential moving average of the parameters over iterations with a decay rate of 0.999, instead of scheduling the learning rate. In Table 1 to Table 5, we used the overall accuracy and the accuracy only for minority classes as the performance measures. We repeated experiments five times under the main setting, and three times under the step imbalance and other various settings of β and γ. We report the average and standard deviation of the performance measures over the repeated experiments. For the vanilla

algorithm, FixMatch+DARP+cRT, and ReMixMatch+DARP+cRT, which suffered from overfitting, we measured performance every 500 iterations and recorded the best performance. Further details of the experimental setup are described in Appendix D.

4.2 Experimental results

The performances of the baseline algorithms under the main setting are summarized in Table 1. We can observe that the proposed algorithm achieved the highest overall performance with the improved performance for minority classes. Interestingly, VAT, a SSL algorithm, showed similar performance as the vanilla algorithm and worse performance than BALMS, a CIL algorithm. Similarly, FixMatch and ReMixMatch, which do not consider class imbalance, showed poor performance for minority classes. Although BALMS mitigated class imbalance, it produced poor overall performance as it does not use unlabeled data for training. This demonstrates the importance of the use of unlabeled data for training even in the class-imbalanced setting. FixMatch+CReST+PDA and ReMixMatch+CReST+PDA mitigated class imbalance by using unlabeled data points classified as the minority classes with a higher probability, but produced lower performance than the proposed algorithm. This is maybe because even if all unlabeled data points classified as minority classes are additionally used for training, the amount of them is still less than that of the data in majority classes, while the proposed algorithm uses class-balanced minibatches by generating the $0/1$ mask. Fixmatch+DARP and ReMixMatch+DARP slightly mitigated class imbalance by refining biased pseudo labels, but resulted in lower performance than the proposed algorithm. This is maybe because even perfect pseudo labels cannot change the underlying class-imbalanced distribution of the training data. By additionally using a re-balancing technique cRT, FixMatch(ReMixMatch)+DARP+cRT performed better than FixMatch(ReMixMatch)+DARP. However, FixMatch(ReMixMatch)+DARP+cRT still performed worse than FixMatch(ReMixMatch)+ABC although it also uses high-quality representations learned by FixMatch(ReMixMatch) and techniques for mitigating class imbalance. The superior performance of FixMatch(ReMixMatch)+ABC over FixMatch(ReMixMatch)+DARP+cRT is probably because FixMatch(ReMixMatch)+ABC was trained end-to-end, and the ABC was also trained using unlabeled data. We discuss this in more detail in Sections 4.4 and 4.5. Overally, the algorithms combined with ReMixMatch showed better performance than the algorithms combined with FixMatch.

Table 1: Overall accuracy/minority-class-accuracy under the main setting

	CIFAR-10-LT	SVHN-LT	CIFAR-100-LT
Algorithm	$\gamma = 100$, $\beta = 20\%$	$\gamma = 100$, $\beta = 20\%$	$\gamma = 20$, $\beta = 40\%$
Vanilla	$55.3_{\pm 1.30}$ / $33.9_{\pm 1.88}$	$77.0_{\pm 0.67}$ / $63.3_{\pm 1.25}$	$40.1_{\pm 1.15}$ / $25.2_{\pm 0.95}$
VAT [24]	$55.3_{\pm 0.88}$ / $28.2_{\pm 1.55}$	$81.3_{\pm 0.47}$ / $68.2_{\pm 0.88}$	$40.4_{\pm 0.34}$ / $24.8_{\pm 0.38}$
BALMS [27]	$70.7_{\pm 0.59}$ / $69.8_{\pm 1.03}$	$87.6_{\pm 0.53}$ / $85.0_{\pm 0.67}$	$50.2_{\pm 0.54}$ / $42.9_{\pm 1.03}$
FixMatch [29]	$72.3_{\pm 0.33}$ / $53.8_{\pm 0.63}$	$88.0_{\pm 0.30}$ / $79.4_{\pm 0.54}$	$51.0_{\pm 0.20}$ / $32.8_{\pm 0.41}$
w/ CReST+PDA [34]	$76.6_{\pm 0.46}$ / $61.4_{\pm 0.85}$	$89.1_{\pm 0.69}$ / $81.7_{\pm 1.18}$	$51.6_{\pm 0.29}$ / $36.4_{\pm 0.46}$
w/ DARP [18]	$73.7_{\pm 0.98}$ / $57.0_{\pm 2.12}$	$88.6_{\pm 0.19}$ / $80.5_{\pm 0.54}$	$51.4_{\pm 0.37}$ / $33.9_{\pm 0.77}$
w/ DARP+cRT [18]	$78.1_{\pm 0.89}$ / $66.6_{\pm 1.55}$	$89.9_{\pm 0.44}$ / $83.5_{\pm 0.61}$	$54.7_{\pm 0.46}$ / $41.2_{\pm 0.42}$
w/ ABC	**81.1**$_{\pm 0.82}$ / **72.0**$_{\pm 1.77}$	**92.0**$_{\pm 0.38}$ / **87.9**$_{\pm 0.73}$	**56.3**$_{\pm 0.19}$ / **43.4**$_{\pm 0.42}$
ReMixMatch [3]	$73.7_{\pm 0.39}$ / $55.9_{\pm 0.87}$	$89.8_{\pm 0.42}$ / $82.8_{\pm 0.68}$	$54.0_{\pm 0.29}$ / $37.1_{\pm 0.37}$
w/ CReST+PDA [34]	$75.7_{\pm 0.34}$ / $59.6_{\pm 0.76}$	$90.9_{\pm 0.20}$ / $85.2_{\pm 0.39}$	$54.6_{\pm 0.48}$ / $38.1_{\pm 0.69}$
w/ DARP [18]	$74.4_{\pm 0.41}$ / $56.9_{\pm 0.67}$	$90.2_{\pm 0.22}$ / $83.5_{\pm 0.40}$	$54.5_{\pm 0.33}$ / $37.7_{\pm 0.58}$
w/ DARP+cRT [18]	$78.5_{\pm 0.61}$ / $66.4_{\pm 1.68}$	$92.1_{\pm 0.48}$ / $87.6_{\pm 0.75}$	$55.1_{\pm 0.45}$ / $43.6_{\pm 0.58}$
w/ ABC	**82.4**$_{\pm 0.45}$ / **75.7**$_{\pm 1.18}$	**93.9**$_{\pm 0.16}$ / **92.5**$_{\pm 0.4}$	**57.6**$_{\pm 0.26}$ / **46.7**$_{\pm 0.50}$

To evaluate the performance of the proposed algorithm in various settings, we conducted experiments using ReMixMatch, FixMatch, and the CISSL algorithms considered in Table 1, while changing the ratio of class imbalance γ and the ratio of the amount of labeled data β. The results on CIFAR-10 are presented in Table 2, and the results on SVHN and CIFAR-100 are presented in Appendix E. In Table 2, we can observe that the proposed algorithm achieved the highest overall accuracy with greatly improved performance for minority classes for all settings. Because FixMatch+DARP+cRT and ReMixMatch+DARP+CRT do not use unlabeled data for classifier tuning, the difference in performance between FixMatch(ReMixMatch)+DARP+cRT and the proposed algorithm increased as the ratio of the amount of labeled data β decreased and as the ratio of class imbalance γ increased. In addition, the difference in performance between FixMatch(ReMixMatch)+CReST+PDA and

the proposed algorithm tended to increase as the ratio of class imbalance γ increased, because the difference between the amount of labeled data points belonging to the majority classes and the amount of unlabeled data points classified as the minority classes increases with γ.

Table 2: Overall accuracy/minority-class-accuracy on CIFAR-10 under various settings

CIFAR-10-LT				
Algorithm	$\gamma = 100$, $\beta = 10\%$	$\gamma = 100$, $\beta = 30\%$	$\gamma = 50$, $\beta = 20\%$	$\gamma = 150$, $\beta = 20\%$
FixMatch [29]	$70.0_{\pm 0.59}$ / $48.9_{\pm 1.04}$	$74.9_{\pm 0.63}$ / $58.2_{\pm 1.28}$	$81.2_{\pm 0.07}$ / $70.7_{\pm 0.36}$	$68.5_{\pm 0.60}$ / $45.8_{\pm 1.15}$
w/ CReST+PDA [34]	$73.9_{\pm 0.40}$ / $58.9_{\pm 1.14}$	$77.6_{\pm 0.73}$ / $64.0_{\pm 1.39}$	$83.3_{\pm 0.10}$ / $75.7_{\pm 0.39}$	$70.0_{\pm 0.82}$ / $49.4_{\pm 1.52}$
w/ DARP+cRT [18]	$74.6_{\pm 0.98}$ / $59.2_{\pm 2.12}$	$79.0_{\pm 0.25}$ / $67.7_{\pm 0.95}$	$83.6_{\pm 0.42}$ / $77.1_{\pm 1.19}$	$73.2_{\pm 0.85}$ / $57.1_{\pm 1.13}$
w/ ABC	**77.2**$_{\pm 1.60}$ / **65.7**$_{\pm 2.85}$	**81.5**$_{\pm 0.29}$ / **72.9**$_{\pm 0.96}$	**85.2**$_{\pm 0.51}$ / **80.2**$_{\pm 0.64}$	**77.1**$_{\pm 0.46}$ / **64.4**$_{\pm 0.92}$
ReMixMatch [3]	$71.5_{\pm 0.51}$ / $52.2_{\pm 1.08}$	$75.8_{\pm 0.10}$ / $59.4_{\pm 0.17}$	$81.5_{\pm 0.17}$ / $70.7_{\pm 0.32}$	$69.9_{\pm 0.23}$ / $48.4_{\pm 0.60}$
w/ CReST+PDA [34]	$73.8_{\pm 0.32}$ / $56.6_{\pm 0.43}$	$78.6_{\pm 0.73}$ / $64.8_{\pm 1.49}$	$83.9_{\pm 0.26}$ / $75.4_{\pm 0.52}$	$71.3_{\pm 0.77}$ / $50.8_{\pm 1.59}$
w/ DARP+cRT [18]	$75.9_{\pm 1.20}$ / $62.1_{\pm 3.10}$	$81.0_{\pm 0.16}$ / $70.7_{\pm 0.72}$	$84.5_{\pm 0.80}$ / $77.8_{\pm 1.67}$	$73.9_{\pm 0.59}$ / $57.4_{\pm 1.45}$
w/ ABC	**79.8**$_{\pm 0.36}$ / **70.8**$_{\pm 0.92}$	**84.3**$_{\pm 1.03}$ / **80.6**$_{\pm 0.97}$	**87.5**$_{\pm 0.31}$ / **84.6**$_{\pm 1.19}$	**80.6**$_{\pm 0.66}$ / **72.1**$_{\pm 1.51}$

We also conducted experiments under a step imbalance setting, where the class imbalance is more noticeable. This setting assumes a more severely imbalanced class distribution than the long-tailed imbalance settings because the half of classes have very scarce data. The experimental results on CIFAR-10 are presented in Table 3, and the results on SVHN and CIFAR-100 are presented in Appendix F. In Table 3, we can see that the proposed algorithm achieved the best performance, and the performance margin is larger compared to the long-tailed imbalance settings. ReMix-Match+CReST+PDA showed relatively low performance compared to the other algorithms.

Table 3: Overall accuracy/minority-class-accuracy on CIFAR-10 under a step imbalance setting

CIFAR-10-Step, $\gamma = 100$, $\beta = 20\%$				
Algorithm	w/ -	w/ CReST+PDA [34]	w/ DARP+cRT [18]	w/ ABC
FixMatch [29]	$54.0_{\pm 0.84}$ / $11.8_{\pm 1.71}$	$71.1_{\pm 0.78}$ / $48.2_{\pm 2.26}$	$69.8_{\pm 1.51}$ / $45.1_{\pm 2.70}$	**75.9**$_{\pm 0.49}$ / **57.0**$_{\pm 1.07}$
ReMixMatch [3]	$60.8_{\pm 0.10}$ / $25.1_{\pm 1.28}$	$64.6_{\pm 0.97}$ / $33.5_{\pm 2.05}$	$72.3_{\pm 1.77}$ / $50.6_{\pm 3.53}$	**76.4**$_{\pm 1.70}$ / **65.7**$_{\pm 1.30}$

To evaluate the performance of the proposed algorithm on a large-scale dataset, we also conducted experiments on the LSUN dataset [37], which is naturally a long-tailed dataset. Among the algorithms considered in Tables 2 and 3, those combined with CReST were excluded for comparison, because CReST requires to load the whole unlabeled data in the repeated process of updating pseudo labels, which is not possible for LSUN dataset of very large scale. Instead, we additionally considered FixMatch+cRT and ReMixMatch+cRT for comparison. The experimental results are presented in Table 4. The proposed algorithm showed better performance than all other baseline algorithms. DARP led to degradation of the performance maybe because it failed to sufficiently refine the pseudo labels for the large scale data. Unlike the results on other datasets, the algorithms combined with FixMatch performed better than the algorithms combined with ReMixMatch.

Table 4: Overall accuracy/minority-class-accuracy on the LSUN dataset of large scale

LSUN, $\gamma = 100$, $\beta = 20\%$					
Algorithm	w/ -	w/ cRT [17]	w/ DARP [18]	w/ DARP+cRT [18]	w/ ABC
FixMatch [29]	73.1 / 55.3	77.0 / 71.5	71.0 / 51.8	75.8 / 69.5	**78.9 / 75.5**
ReMixMatch [3]	69.4 / 49.1	75.4 / 69.5	65.6 / 44.1	72.1 / 67.5	**76.9 / 69.5**

4.3 Complexity of the proposed algorithm

The proposed algorithm requires additional parameters for the ABC, but the number of them may be negligible compared to that of the parameters of the backbone. For example, the ABC additionally required only 0.09% and 0.87% of the number of the backbone parameters for CIFAR-10 with 10 classes and CIFAR-100 with 100 classes, respectively. Moreover, because the ABC shares the representation layer of the backbone, it does not significantly increase the memory occupancy and training time. Furthermore, we could train the proposed algorithm on the LSUN dataset of large scale without a significant increase in computation cost because the whole training procedure could be

carried out using minibatches of data. In contrast, the algorithms combined with DARP required convex optimization for all pseudo labels, which significantly increased the computation cost as the number of classes or the amount of data increased. Similarly, it took a long time to train the algorithms combined with CReST, because CReST requires iterative re-training with a labeled set expanded by adding unlabeled data points with pseudo labels. We present the floating point operations per second (FLOPS) of each algorithm using Nvidia Tesla-V100 in Appendix G.

4.4 Qualitative analysis on high-quality representations and balanced classification

We argue that the ABC can use high-quality representations learned by the backbone when performing balanced classification. To verify this, in Figure 3, we present the t-stochastic neighbor embedding (t-SNE) [31] of the representations of the CIFAR-10 test set learned by the ABC only (without backbone), FixMatch+ABC, and ReMixMatch+ABC on CIFAR-10-LT under the main setting. Different colors indicate different classes. As expected, "ABC only" failed to learn class-separable representations because sufficient data were not used for training while using the $0/1$ mask. In contrast, by training the backbone (FixMatch or ReMixMatch) together with the ABC, the proposed algorithm could use the whole data and learn high-quality representations. In this example, ReMixMatch produced more separable representations than FixMatch, which shows that the choice of the backbone impacts the performance of the proposed algorithm as expected.

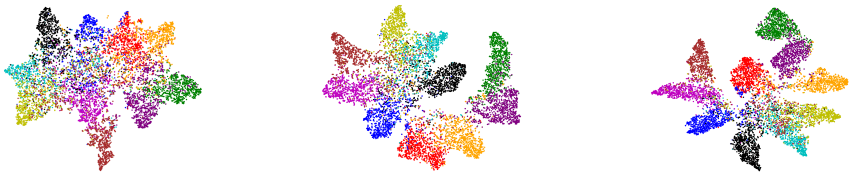

(a)ABC only (b)FixMatch+ABC (c) ReMixMatch+ABC

Figure 3: t-SNE of the proposed algorithm and the ABC only

We also argue that the proposed algorithm can mitigate class imbalance by using the ABC. To verify this, we compare the confusion matrices of the predictions on the test set of CIFAR-10 using ReMixMatch, ReMixMatch+DARP+cRT, and ReMiMatch+ABC trained on CIFAR-10 under the main setting in Figure 4. In the confusion matrices, the value in the ith row and the jth column represents the ratio of the amount of data belonging to the ith class to the amount of data predicted as the jth class. Each cell has a darker red color if the ratio is larger. We can see that ReMixMatch often misclassified data points in the minority classes (e.g., classes 8 and 9 into classes 0 and 1). This is maybe because ReMixMatch does not consider class imbalance, and thus biased pseudo labels were used for training. ReMixMatch+DARP+cRT produced more balanced class-distribution compared to ReMixMatch by additionally using DARP+cRT. However, a significant number of data points in the minority classes were still misclassified as the majority classes. In contrast, ReMixMatch+ABC classified the test data points in the minority classes with higher accuracy, and produced a significantly more balanced class-distribution than ReMixMatch+DARP+cRT, as shown in Figure 4 (c). As both ReMixMatch+DARP+cRT and ReMixMatch+ABC use ReMixMatch to learn representations, the performance gap between these two algorithms results from the different characteristics of ABC versus DARP+cRT as follows. First, whereas DARP+cRT decouples learning of representations and training of a classifier, ABC is trained end-to-end interactively with representations that the backbone learns. Second, DARP+cRT does not use unlabeled data for training of its classifier after representations learning is finished, while ABC uses unlabeled data with unbiased pseudo labels for its training. We also present the confusion matrices of the predictions on the test set of CIFAR-10 using FixMatch, FixMatch+DARP+cRT, and FixMatch+ABC as well as the confusion matrices of the pseudo labels on the same dataset using ReMixMatch, ReMixMatch+DARP+cRT, ReMixMatch+ABC, FixMatch, FixMatch+DARP+cRT, and FixMatch+ABC in Appendix H. Moreover, we compare ABC and a classifier of DARP+cRT in more detail using the plots of validation loss in Appendix I.

4.5 Ablation study

We conducted an ablation study on CIFAR-10-LT under the main setting to investigate the effect of each element of the proposed algorithm. The results for ReMixMatch+ABC in Table 5 can be summarized as follows. 1) If we did not gradually decrease the parameter of the Bernoulli distribution

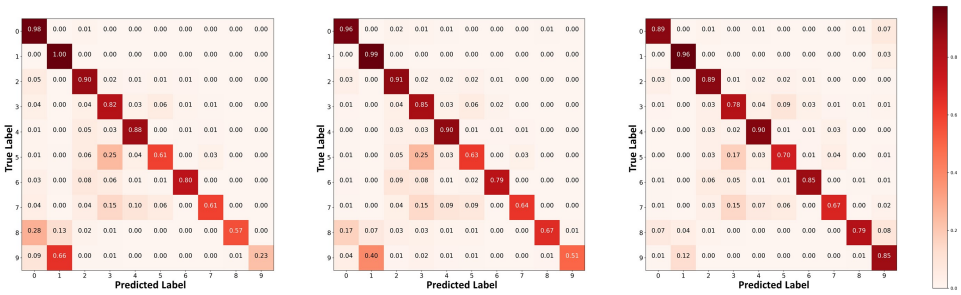

(a)ReMixMatch (b)ReMixMatch+DARP+cRT (c) ReMixMatch+ABC

Figure 4: Confusion matrices of the predictions on the test set of CIFAR-10

$\mathcal{B}(\cdot)$ when conducting consistency regularization, an overbalance problem occurred due to unlabeled data misclassified as the minority classes. 2) Without consistency regularization for the ABC, the decision boundary did not clearly separate each class. 3) Without using the $0/1$ mask for L_{cls} and L_{con}, the ABC was trained to be biased toward the majority classes. 4) Without confidence threshold τ for consistency regularization, training became unstable, and consequently, the ABC was trained to be biased toward certain classes. 5) Similarly, if hard pseudo-labels, instead of soft pseudo-labels, were used for consistency regularization, the ABC was biased toward certain classes. 6) If the ABC was solely used without the backbone, the performance decreased because the ABC could not use high-quality representations learned by the backbone. 7) When we used a re-weighting technique [13] instead of a mask for the ABC, training became unstable because of abnormally large gradients calculated for training on the data of the minority classes. 8) Decoupled training of the backbone and the ABC resulted in decreased classification performance, as we also analyzed in Section 4.4. Similarly, we present the results of the ablation study for FixMatch+ABC in Appendix J.

Table 5: Ablation study for ReMixMatch+ABC on CIFAR-10-LT, $\gamma = 100$, $\beta = 20\%$

Ablation study	Overall	Minority
ReMixMatch+ABC (proposed algorithm)	**82.4**	**75.7**
Without gradually decreasing the parameter of $\mathcal{B}(\cdot)$ for consistency regularization	81.8	74.6
Without consistency regularization for the ABC	79.4	66.9
Without using the 0/1 mask for the consistency regularization loss L_{con}	79.0	69.2
Without using the 0/1 mask for the classification loss L_{cls}	74.4	57.8
Without using the confidence threshold τ for consistency regularization	74.3	75.4
Using hard pseudo labels for consistency regularization	70.2	75.1
Without training backbone (ABC only)	68.7	56.2
Training the ABC with a re-weighting technique	81.2	74.1
Decoupled training of the backbone and ABC	79.5	72.3

5 Conclusion

We introduced the ABC with the $0/1$ mask, which is attached to a state-of-the-art SSL algorithm, for class-imbalanced semi-supervised learning. The ABC can utilize high-quality representations learned by the backbone, while being trained to make class-balanced predictions. The ABC also utilizes unlabeled data by conducting consistency regularization in a modified way for class-imbalance problems. Experimental results under various settings demonstrate that the proposed algorithm outperforms the baseline algorithms. We also qualitatively analyzed the reasons for the effective performance of the proposed algorithm, and verified the contribution of each element of the proposed algorithm through the ablation study. The proposed algorithm is based on the assumption that the labeled data and unlabeled data are class-imbalanced to the same extent, which may not be the case in practice. In the future, we plan to release this assumption by adopting a module for estimating the class distribution. Deep learning algorithms can be used in many SSL tasks in societal problems. However, if the underlying class distribution of the training data is imbalanced, the algorithms can be trained to make socially biased decisions in favor of majority groups. The proposed algorithm can contribute to solving these issues. However, there is also a potential risk that the proposed algorithm could be used as a tool to identify minorities and discriminate against them. To prevent this issue, it is necessary to ensure that the proposed method cannot be used for any purpose that may have negative social impacts.

References

[1] An, J., Ying, L., and Zhu, Y. (2021). Why resampling outperforms reweighting for correcting sampling bias with stochastic gradients. In *International Conference on Learning Representations*.

[2] Barandela, R., Rangel, E., Sánchez, J. S., and Ferri, F. J. (2003). Restricted decontamination for the imbalanced training sample problem. In *Iberoamerican congress on pattern recognition*, pages 424–431. Springer.

[3] Berthelot, D., Carlini, N., Cubuk, E. D., Kurakin, A., Sohn, K., Zhang, H., and Raffel, C. (2019a). Remixmatch: Semi-supervised learning with distribution matching and augmentation anchoring. In *International Conference on Learning Representations*.

[4] Berthelot, D., Carlini, N., Goodfellow, I., Papernot, N., Oliver, A., and Raffel, C. A. (2019b). Mixmatch: A holistic approach to semi-supervised learning. In Wallach, H., Larochelle, H., Beygelzimer, A., d'Alché-Buc, F., Fox, E., and Garnett, R., editors, *Advances in Neural Information Processing Systems*, volume 32. Curran Associates, Inc.

[5] Buda, M., Maki, A., and Mazurowski, M. A. (2018). A systematic study of the class imbalance problem in convolutional neural networks. *Neural Networks*, 106:249–259.

[6] Cao, K., Wei, C., Gaidon, A., Arechiga, N., and Ma, T. (2019). Learning imbalanced datasets with label-distribution-aware margin loss. In Wallach, H., Larochelle, H., Beygelzimer, A., d'Alché-Buc, F., Fox, E., and Garnett, R., editors, *Advances in Neural Information Processing Systems*, volume 32. Curran Associates, Inc.

[7] Chawla, N. V., Bowyer, K. W., Hall, L. O., and Kegelmeyer, W. P. (2002). Smote: synthetic minority over-sampling technique. *Journal of artificial intelligence research*, 16:321–357.

[8] Cubuk, E. D., Zoph, B., Shlens, J., and Le, Q. V. (2020). Randaugment: Practical automated data augmentation with a reduced search space. In *Proceedings of the IEEE/CVF Conference on Computer Vision and Pattern Recognition Workshops*, pages 702–703.

[9] Cui, Y., Jia, M., Lin, T.-Y., Song, Y., and Belongie, S. (2019). Class-balanced loss based on effective number of samples. In *Proceedings of the IEEE/CVF Conference on Computer Vision and Pattern Recognition*, pages 9268–9277.

[10] DeVries, T. and Taylor, G. W. (2017). Improved regularization of convolutional neural networks with cutout. *arXiv preprint arXiv:1708.04552*.

[11] Gidaris, S., Singh, P., and Komodakis, N. (2018). Unsupervised representation learning by predicting image rotations. In *International Conference on Learning Representations*.

[12] Grandvalet, Y. and Bengio, Y. (2005). Semi-supervised learning by entropy minimization. In Saul, L., Weiss, Y., and Bottou, L., editors, *Advances in Neural Information Processing Systems*, volume 17. MIT Press.

[13] He, H. and Garcia, E. A. (2009). Learning from imbalanced data. *IEEE Transactions on knowledge and data engineering*, 21(9):1263–1284.

[14] Huang, C., Li, Y., Loy, C. C., and Tang, X. (2016). Learning deep representation for imbalanced classification. In *Proceedings of the IEEE conference on computer vision and pattern recognition*, pages 5375–5384.

[15] Jamal, M. A., Brown, M., Yang, M.-H., Wang, L., and Gong, B. (2020). Rethinking class-balanced methods for long-tailed visual recognition from a domain adaptation perspective. In *Proceedings of the IEEE/CVF Conference on Computer Vision and Pattern Recognition*, pages 7610–7619.

[16] JAPKOWICZ, N. (2000). The class imbalance problem: Significance and strategies. In *Proc. 2000 International Conference on Artificial Intelligence*, volume 1, pages 111–117.

[17] Kang, B., Xie, S., Rohrbach, M., Yan, Z., Gordo, A., Feng, J., and Kalantidis, Y. (2019). Decoupling representation and classifier for long-tailed recognition. In *International Conference on Learning Representations*.

[18] Kim, J., Hur, Y., Park, S., Yang, E., Hwang, S. J., and Shin, J. (2020a). Distribution aligning refinery of pseudo-label for imbalanced semi-supervised learning. In Larochelle, H., Ranzato, M., Hadsell, R., Balcan, M. F., and Lin, H., editors, *Advances in Neural Information Processing Systems*, volume 33, pages 14567–14579. Curran Associates, Inc.

[19] Kim, J., Jeong, J., and Shin, J. (2020b). M2m: Imbalanced classification via major-to-minor translation. In *Proceedings of the IEEE/CVF Conference on Computer Vision and Pattern Recognition*, pages 13896–13905.

[20] Kingma, D. P. and Ba, J. (2015). Adam: A method for stochastic optimization. In *ICLR, 2015*.

[21] Krizhevsky, A. (2009). Learning multiple layers of features from tiny images. *Technical report, Department of Computer Science, University of Toronto*.

[22] Lee, D.-H. et al. (2013). Pseudo-label: The simple and efficient semi-supervised learning method for deep neural networks. In *Workshop on challenges in representation learning, ICML*, volume 3.

[23] Mikolov, T., Sutskever, I., Chen, K., Corrado, G. S., and Dean, J. (2013). Distributed representations of words and phrases and their compositionality. In Burges, C. J. C., Bottou, L., Welling, M., Ghahramani, Z., and Weinberger, K. Q., editors, *Advances in Neural Information Processing Systems*, volume 26. Curran Associates, Inc.

[24] Miyato, T., Maeda, S.-i., Koyama, M., and Ishii, S. (2018). Virtual adversarial training: a regularization method for supervised and semi-supervised learning. *IEEE transactions on pattern analysis and machine intelligence*, 41(8):1979–1993.

[25] Netzer, Y., Wang, T., Coates, A., Bissacco, A., Wu, B., and Ng, A. Y. (2011). Reading digits in natural images with unsupervised feature learning. *In NIPS Workshop, 2011*.

[26] Park, S., Park, J., Shin, S.-J., and Moon, I.-C. (2018). Adversarial dropout for supervised and semi-supervised learning. In *Proceedings of the AAAI Conference on Artificial Intelligence*, volume 32.

[27] Ren, J., Yu, C., sheng, s., Ma, X., Zhao, H., Yi, S., and Li, h. (2020). Balanced meta-softmax for long-tailed visual recognition. In Larochelle, H., Ranzato, M., Hadsell, R., Balcan, M. F., and Lin, H., editors, *Advances in Neural Information Processing Systems*, volume 33, pages 4175–4186. Curran Associates, Inc.

[28] Ren, M., Zeng, W., Yang, B., and Urtasun, R. (2018). Learning to reweight examples for robust deep learning. In *International Conference on Machine Learning*, pages 4334–4343. PMLR.

[29] Sohn, K., Berthelot, D., Carlini, N., Zhang, Z., Zhang, H., Raffel, C. A., Cubuk, E. D., Kurakin, A., and Li, C.-L. (2020). Fixmatch: Simplifying semi-supervised learning with consistency and confidence. *Advances in Neural Information Processing Systems*, 33.

[30] Tarvainen, A. and Valpola, H. (2017). Mean teachers are better role models: Weight-averaged consistency targets improve semi-supervised deep learning results. In Guyon, I., Luxburg, U. V., Bengio, S., Wallach, H., Fergus, R., Vishwanathan, S., and Garnett, R., editors, *Advances in Neural Information Processing Systems*, volume 30. Curran Associates, Inc.

[31] Van der Maaten, L. and Hinton, G. (2008). Visualizing data using t-sne. *Journal of machine learning research*, 9(11).

[32] Verma, V., Lamb, A., Kannala, J., Bengio, Y., and Lopez-Paz, D. (2019). Interpolation consistency training for semi-supervised learning. In *Proceedings of the Twenty-Eighth International Joint Conference on Artificial Intelligence, IJCAI-19*, pages 3635–3641. International Joint Conferences on Artificial Intelligence Organization.

[33] Wang, Y.-X., Ramanan, D., and Hebert, M. (2017). Learning to model the tail. In Guyon, I., Luxburg, U. V., Bengio, S., Wallach, H., Fergus, R., Vishwanathan, S., and Garnett, R., editors, *Advances in Neural Information Processing Systems*, volume 30. Curran Associates, Inc.

[34] Wei, C., Sohn, K., Mellina, C., Yuille, A., and Yang, F. (2021). Crest: A class-rebalancing self-training framework for imbalanced semi-supervised learning. *arXiv preprint arXiv:2102.09559*.

[35] Yang, Y. and Xu, Z. (2020). Rethinking the value of labels for improving class-imbalanced learning. In Larochelle, H., Ranzato, M., Hadsell, R., Balcan, M. F., and Lin, H., editors, *Advances in Neural Information Processing Systems*, volume 33, pages 19290–19301. Curran Associates, Inc.

[36] Yin, X., Yu, X., Sohn, K., Liu, X., and Chandraker, M. (2018). Feature transfer learning for deep face recognition with under-represented data. *arXiv e-prints*, pages arXiv–1803.

[37] Yu, F., Zhang, Y., Song, S., Seff, A., and Xiao, J. (2015). Lsun: Construction of a large-scale image dataset using deep learning with humans in the loop. *arXiv preprint arXiv:1506.03365*.

[38] Zagoruyko, S. and Komodakis, N. (2016). Wide residual networks. *arXiv preprint arXiv:1605.07146*.

[39] Zhai, X., Oliver, A., Kolesnikov, A., and Beyer, L. (2019). S4l: Self-supervised semi-supervised learning. In *Proceedings of the IEEE/CVF International Conference on Computer Vision*, pages 1476–1485.

Checklist

1. For all authors...
   (a) Do the main claims made in the abstract and introduction accurately reflect the paper's contributions and scope? [Yes]
   (b) Did you describe the limitations of your work? [Yes] See Section 5.
   (c) Did you discuss any potential negative societal impacts of your work? [Yes] See Section 5.
   (d) Have you read the ethics review guidelines and ensured that your paper conforms to them? [Yes]
2. If you are including theoretical results...
   (a) Did you state the full set of assumptions of all theoretical results? [N/A]
   (b) Did you include complete proofs of all theoretical results? [N/A]
3. If you ran experiments...
   (a) Did you include the code, data, and instructions needed to reproduce the main experimental results (either in the supplemental material or as a URL)? [Yes] We included the code and instruction in the supplemental material. We will also upload the code at github with the copyright after the review process.
   (b) Did you specify all the training details (e.g., data splits, hyperparameters, how they were chosen)? [Yes] See Section 4.1 and Appendix D.
   (c) Did you report error bars (e.g., with respect to the random seed after running experiments multiple times)? [Yes] See Section 4.2.
   (d) Did you include the total amount of compute and the type of resources used (e.g., type of GPUs, internal cluster, or cloud provider)? [Yes] We summarize the resources and FLOPS in Section 4.2 and Appendix G.
4. If you are using existing assets (e.g., code, data, models) or curating/releasing new assets...
   (a) If your work uses existing assets, did you cite the creators? [Yes] We cited the creators of CIFAR-10, SVHN, CIFAR-100, LSUN in Section 4.1.
   (b) Did you mention the license of the assets? [N/A] In their homepage, the creators of the datasets request to cite their work rather than mentioning the license.
   (c) Did you include any new assets either in the supplemental material or as a URL? [Yes] We included the code for training the proposed algorithm as the supplemental material. We will also upload it at github with the copyright after review process.
   (d) Did you discuss whether and how consent was obtained from people whose data you're using/curating? [N/A] We used the benchmark datasets cited in Section 4.1

(e) Did you discuss whether the data you are using/curating contains personally identifiable information or offensive content? [N/A] We used the benchmark datasets cited in Section 4.1

5. If you used crowdsourcing or conducted research with human subjects...

(a) Did you include the full text of instructions given to participants and screenshots, if applicable? [N/A]

(b) Did you describe any potential participant risks, with links to Institutional Review Board (IRB) approvals, if applicable? [N/A]

(c) Did you include the estimated hourly wage paid to participants and the total amount spent on participant compensation? [N/A]