AUTOMATICALLY INFERRING DATA QUALITY FOR SPATIOTEMPORAL FORECASTING

Anonymous authors
Paper under double-blind review

ABSTRACT

The importance of learning from spatiotemporal data has been growing with the increasing number of data sources distributed over space. While numerous studies have been done for analyzing the spatiotemporal signals, existing models have assumed that the heterogeneous data sources in spatial domain are equally reliable over time. In this paper, we propose the novel method that infers the time-varying data quality level based on the local variations of spatiotemporal signals without explicitly assigned labels. Furthermore, we extend the formulation of the quality level by combining with graph convolutional networks to exploit the efficient architecture. Finally, we evaluate the proposed method by simulating a forecasting task with real-world climate data.

1 INTRODUCTION

The recent advances with GPS-equipped technology have facilitated the collection of large spatiotemporal datasets. As the increasing number of spatiotemporal data, many have proposed representing this data as time-varying graph signals in various domains, such as sensor networks (Shi et al., 2015; Zhu & Rabbat, 2012), climate analysis (Chen et al., 2014; Mei & Moura, 2015), and traffic control systems (Li et al., 2017; Yu et al., 2017). Furthermore, the study of time-varying graph signals has been applied to biology (Mutlu et al., 2012; Yu et al., 2015).

While many works have been proposed to exploit the spatial structures and temporal signals, most models have implicitly assumed that each signal source in a structure is equally reliable over time, and not differentiating data quality of different sources at different time steps. However, a large amount of data are from heterogenous sources that have different levels of noise (Song et al., 2015; Zhang & Chaudhuri, 2015). Moreover, the noises of each source can be time-varying due to abrupt malfunction of sensors. In order to fully utilize the credibility of each single source over time, it is important to be able to model a different level of data. However, relying on domain experts to manually assign such labels is laborious and expensive, making it extremely challenging to build a model that can differentiate between high and low quality sources in an unsupervised setting.

In this paper, we consider the learning problem of spatiotemporal signals, where temporal signals have been observed at different locations which can be represented by time-varying graph signals. Given a graph $\mathcal{G} = (\mathcal{V}, \mathcal{E}, \mathbf{W})$ and observations $\mathcal{X} \in \mathbb{R}^{N \times M \times T}$ where N, M, T are the number of vertices, the types of signals, and the length of time-varying signals, respectively, we propose a model that is able to exploit the structural information (spatial features) as well as the temporal behaviors (time series). On top of the time-varying graph signals, we implement graph-based neural networks which encode the level of data quality at each vertex into a scalar by looking at signals observed at the set of all the vertices adjacent to the vertex. Once the quality scalar for each vertex is extracted from the data, we use the quality level as a weight of a loss function that is dependent on a type of task, classification or regression, on the vertex.

Here is a summary of the key contributions of the paper. First, we define a concept of a data quality level at a vertex in a graph using the local variation of the vertex. The local variation at each vertex depends on the local structure as well as neighboring signals. We assume that the data quality level at a vertex is a function of the local variation at the vertex, and the function can be trained in a way similar to the training of layer-wise graph convolutional networks (GCNs) (Kipf & Welling, 2016). Secondly, we combine the quality level with an objective function defined by a given task. In this setting, the quality level behaves as a regularizer constant in the objective function. Finally,

we demonstrate that the data quality is an essential factor which can improve performance of given tasks, forecasting, on a number of datasets.

Related work The first set of work related to our study is about learning and processing graph signals or features. Spectral graph theory (Chung, 1997; Von Luxburg, 2007; Shi et al., 2015) has been developed as a main study to understand two aspects of graph signals, structures and signals. Under the theory many works have been introduced to exploit convolutional neural networks (CNNs) which provide an efficient architecture to extract localized features or patterns from regular grids, such as images (Krizhevsky et al., 2012). Bruna et al. (2013) introduce how to learn convolutional parameters based on the spectrum of graph Laplacian. Later, Henaff et al. (2015) extend the spectral aspect of CNNs on graphs into large-scale learning problems. From the pioneer works about graph convolutional networks (GCNs), Defferrard et al. (2016) propose a spectral formulation for fast localized filtering with efficient pooling. Furthermore, Kipf & Welling (2016) re-formularize existing ideas into layer-wise neural networks that can be tuned through backpropagation rule with a first-order approximation of spectral filters introduced in Hammond et al. (2011). On top of these studies, we propose a graph convolutional layer that maps spatiotemporal features into a data quality level.

There are a number of works about considering data qualities and handling heterogeneous data sources. Urner et al. (2012) is the first theoretical work that proposes a mixture of two types of labels for supervised learning. One type of the labels is considered as high quality labels from an expensive source (domain experts) while another type is from error-prone crowdsourcing. Since the reliability or quality of the labels is different, it is not desired to consider them equally. They propose a learning algorithm that is able to utilize the error-prone labels to reduce the cost required for the expert labeling. Zhang & Chaudhuri (2015) address issues from strong and weak labelers by developing an active learning algorithm minimizing the number of label requests. Song et al. (2015) focus on the data of variable quality resulting from heterogeneous sources. They define the concept of heterogeneity of data and develop a method adjusting the learning rate based on the heterogeneity. Unlike these existing works, we provide a method to differentiate heterogeneous sources based on neighbor signals without any explicit labels.

Outline We review graph signal processing to define the local variation and a data quality level (DQL) with graph convolutional networks in Section 2. In Section 3, we provide how the data quality levels are exploited with recurrent neural networks to differentiate reliability of observations on vertices. Also, we construct a forecasting model, DQ-LSTM. Our main result is presented in Section 4 with other baselines. In Section 5 we discuss its properties and interpret the data reliability inferred from our model. We then conclude with Section 6.

2 PRELIMINARIES

We first show how to define the local variation at a vertex based on graph signals. Then, we will provide how the variational features at each vertex can be used to generate a data quality level.

2.1 LOCAL VARIATION

We focus on the graph signals defined on an undirected, weighted graph $\mathcal{G} = (\mathcal{V}, \mathcal{E}, \mathbf{W})$, where $\mathcal{V}$ is a set of vertices with $|\mathcal{V}| = N$ and $\mathcal{E}$ is a set of edges. $\mathbf{W} \in \mathbb{R}^{N \times N}$ is a random-walk normalized weighted adjacency matrix which provides how two vertices are relatively close. When the elements W_{ij} are not be expliticly provided by dataset, the graph connectivity can be constructed by various distance metrics, such as Euclidean distance, cosine similarity, and a Gaussian kernel (Belkin & Niyogi, 2002), on the vertex features $\mathbf{V} \in \mathbb{R}^{N \times F}$ where F is the dimension of the features.

Once all the structural connectivity is defined, the local variation can be defined by the edge derivative of a given graph signal $\mathbf{x} \in \mathbb{R}^N$ defined on every vertex (Zhou & Schölkopf, 2004).

$$\left.\frac{\partial \mathbf{x}}{\partial e}\right|_{e=(i,j)} = \sqrt{W_{ij}}(x(j) - x(i)), \tag{1}$$

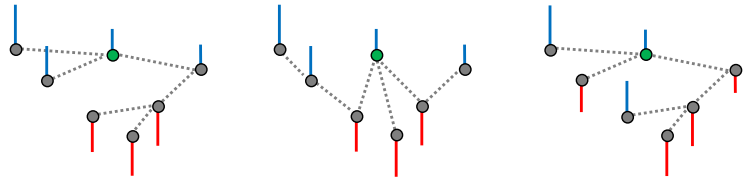

(a) Original graph (b) Different adjacency (c) Different graph signal

Figure 1: Each bar represents the signal value at the vertex where the bar originates. Blue and red color indicate positive and negative values, respectively. Local variations at the green node are (a) 1.67 (b) 25 and (c) 15, respectively.

where $e = (i, j)$ is defined as a direction of the derivative and $x(i)$ is a signal value on the vertex i. The graph gradient of $\mathbf{x}$ at vertex i can be defined by Eq. 1 over all edges joining the vertex i.

$$\nabla_i \mathbf{x} = \left(\left. \frac{\partial \mathbf{x}}{\partial e} \right|_{e=(i,j)} \middle| \, j \in \mathcal{N}_i \right), \tag{2}$$

where $\mathcal{N}_i$ is a set of neighbor vertices of the vertex i. While the dimesion of the graph gradient is different due to the different number of neighbors of each vertex, the local variation at vertex i can be defined by a norm of the graph gradient:

$$\|\nabla_i \mathbf{x}\|_2^2 = \sum_{j \in \mathcal{N}_i} W_{ij}(x(j) - x(i))^2, \tag{3}$$

Eq. 3 provides a measure of local variation of $\mathbf{x}$ at vertex i. As it indicates, if all neighboring signals of i are close to the signal at i, the local variation at i should be small and it means *less fluctuated signals* around the vertex. As Eq. 3 shows, the local variation is a function of a structural connectivity $\mathbf{W}$ and graph signals $\mathbf{x}$. Figure 1 illustrates how the two factors affect the local variation at the same vertex.

The concept of the local variation is easily generalized to multivariate graph signals of M different measures by repeatedly computing Eq. 3 over all measures.

$$\mathbf{L}_i = (\|\nabla_i \mathbf{x}^1\|_2^2, \cdots, \|\nabla_i \mathbf{x}^m\|_2^2, \cdots, \|\nabla_i \mathbf{x}^M\|_2^2), \tag{4}$$

where $\mathbf{x}^m \in \mathbb{R}^N$ corresponds the mth signals from multiple sensors. As Eq. 4 indicates, $\mathbf{L}_i$ is a M dimensional vector describing local variations at the vertex i with respect to the M different measures.

Finally, it is desired to represent Eq. 4 in a matrix form to be combined with graph convolutional networks later.

$$\mathbf{L}(\mathbf{W}, \mathbf{X}) = (\mathbf{D} + \mathbf{W})(\mathbf{X} \odot \mathbf{X}) - 2(\mathbf{X} \odot \mathbf{W}\mathbf{X}), \tag{5}$$

where $\mathbf{D}$ is a degree matrix defined as $D_{ii} = \sum_j W_{ij}$ and $\odot$ is an element-wise product operator. $\mathbf{X}$ is a $N \times M$ matrix describing multivariate graph signals on N vertices and $\mathbf{x}^m$ is a mth column of $\mathbf{X}$. $\mathbf{L} \in \mathbb{R}^{N \times M}$ is a local variation matrix and L_{im} is the local variation at the vertex i with respect to the mth signal.

2.2 Data Quality Level

While the term of data quality has been used in various ways, it generally means "*fitness of use*" for intended purposes (Juran & Godfrey, 1999). In this section, we will define the term under the property of data we are interested in and propose how to exploit the data quality level into a general framework.

Given a multivariate graph signal $\mathbf{X} \in \mathbb{R}^{N \times M}$ on vertices represented by a feature matrix $\mathbf{V} \in \mathbb{R}^{N \times F}$, we assume that a signal value at a certain vertex i should not be significantly different with signals of neighboring vertices $j \in \mathcal{N}_i$. This is a valid assumption if the value at the vertex i is dependent on (or function of) features of the vertex $\mathbf{V}_i$ when an edge weight is defined by

a distance in the feature vector space between two vertices. In other word, if two vertices have similar features, they are connected to form the graph structure and the signal values observed at the vertices are highly likely similar. There are a lot of domains which follow the assumption, for instance, geographical features (vertex features) and meteorological observations (graph signal) or sensory nervous features and received signals.

Under the assumption, we define the data quality at a vertex i as a function of local variations of i:

$$w_i = q(\mathbf{L}_i), \tag{6}$$

It is flexible to choose the function q. For example, w_i can be defined as an average of $\mathbf{L}_i$. If so, all measures are equally considered to compute the data quality at vertex i. In more general sense, we can introduce parameterized q by $\mathbf{\Phi}$ and learn the parameters through data. Kipf & Welling (2016) propose a method that learns parameters for graph-based features by the layer-wise graph convolutional networks (GCNs) with arbitrary activation functions. For a single layer GCN on a graph, the latent representation of each node can be represented as:

$$\mathbf{Z} = \sigma(\hat{\mathbf{A}}\mathbf{X}\mathbf{\Theta}), \tag{7}$$

where $\hat{\mathbf{A}}$ provides *structural connectivities* of a graph and $\mathbf{\Theta}$ is a trainable parameter matrix. σ is an activation function. By stacking $\sigma(\hat{\mathbf{A}}\mathbf{X}\mathbf{\Theta})$, it is able to achieve larger receptive fields with multi-layer GCNs. See details in Kipf & Welling (2016).

We can replace $\hat{\mathbf{A}}\mathbf{X}$ with $\mathbf{L}$ which is also a function of the weighted adjacency $\mathbf{W}$ and the graph signal $\mathbf{X}$. Note that values in row i of $\hat{\mathbf{A}}\mathbf{X}$ and $\mathbf{L}$ are a function of values at i as well as neighbors of i. Although $\mathbf{L}$ only exploits nearest neighbors (i.e., 1-hop neighbors), it is possible to consider K-hop neighbors to compute the local variations by stacking GCN before applying Eq. 3. The generalized formula for the data quality level can be represented as:

$$\mathbf{Z} = \sigma_K(\hat{\mathbf{A}}\sigma_{K-1}(\hat{\mathbf{A}}\cdots\sigma_1(\hat{\mathbf{A}}\mathbf{X}\mathbf{\Theta_1})\cdots\mathbf{\Theta}_{K-1})\mathbf{\Theta}_K), \tag{8}$$

$$\mathbf{w} = \sigma_L(\mathbf{L}(\mathbf{W},\mathbf{Z})\mathbf{\Phi}). \tag{9}$$

where K is the number of GCN layers and $\mathbf{w} = (w_1, w_2, \cdots, w_N)$ is the data quality level of each vertex incorporating K-hop neighbors. We propose some constraints to ensure that a higher w_i corresponds to *less fluctuated* around i. First, we constrain $\mathbf{\Phi}$ to be positive to guarantee that larger elements in $\mathbf{L}$ cause larger $\mathbf{L}\mathbf{\Phi}$ that are inputs of σ_L. Next, we use an activation function that is inversely proportional to an input, e.g., $\sigma_L(x) = \frac{1}{1+x}$, to meet the relation between the data quality w_i and the local variations $\mathbf{L}_i$. Once $\mathbf{w}$ is obtained, it will be combined with an objective function to assign a penalty for each vertex loss function.

3 MODEL

In this section, we give the details of the proposed model, which is able to exploit the data quality defined in Section 2.2 for practical tasks. First, it will be demonstrated how the data quality network DQN is combined with recurrent neural networks (LSTM) to handle time-varying signals. We, then, provide how this model is trained over all graph signals from all vertices.

Data quality network In Section 2.2, we find that the local variations around all vertices can be computed once graph signals $\mathbf{X}$ are given. Using the local variations matrix $\mathbf{L}$, the data quality level at each vertex w_i can be represented as a function q of $\mathbf{L}_i$ around a vertex i (See Eq. 6). While the function q is not explicitly provided, we can parameterize the function and learn the parameters $\mathbf{\Phi} \in \mathbb{R}^M$ through a given dataset.

One of straightforward parameterizations is based on fully connected neural networks. Given a set of features, neural networks are efficient to find nonlinear relations between each feature. Furthermore, the parameters in the neural networks can be easily learned through optimizing a loss function defined for own purpose. Thus, we use a single layer neural networks $\mathbf{\Phi}$ followed by an activation function σ_L to transfer the local variations to the data quality level. Note that multi-layer GCNs can be used between graph signals and DQN to extract convolved signals as well as increase the size of convolution filters. (See Eq. 8 and 9).

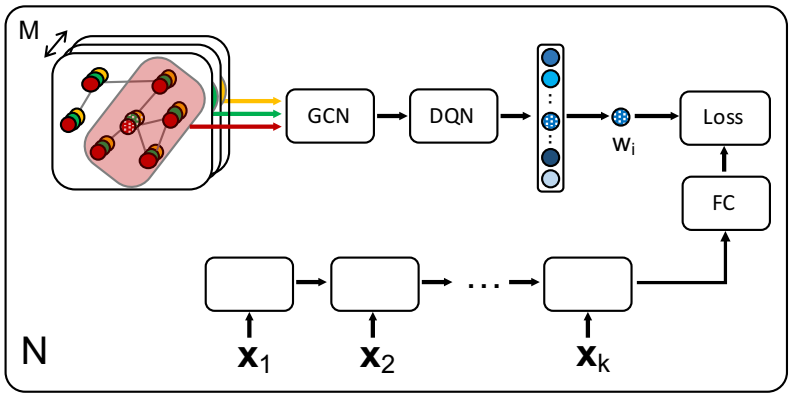

Figure 2: Architecture of DQ-LSTM that consists of GCNs followed by the data quality network DQN and LSTM. GCNs are able to extract localized features from given graph signals (different colors correspond to different signals) and DQN computes the data quality of each vertex. N is the number of vertices, i.e. each loss function on each vertex is weighted by the quality level w_i. Note that the dot-patterned circles denote the current vertex.

Long short term memory Recurrent neural networks (RNNs) are especially powerful to extract patterns in time series which has inherent dependencies between not only adjacent data points but also distant points. Among existing various RNNs, we use Long short term memory (LSTM) (Hochreiter & Schmidhuber, 1997) to handle the temporal signals on vertices for a regression task. We feed finite lengths k of sequential signals into LSTM as an input series to predict the observation at next time step. The predicted value is going to be compared to a true value and all parameters in LSTM will be updated via backpropagation through time.

DQ-LSTM Figure 2 illustrates how data quality networks with LSTM (DQ-LSTM) consists of submodules. Time-varying graph signals on N vertices can be represented as a tensor form, $\mathcal{X} \in \mathbb{R}^{N \times M \times T}$ where the total length of signals is T. First, the time-varying graph signals for each vertex are segmentized to be fed into LSTM. For example, $\mathcal{X}(i, :, h : h + k - 1)$ is one of segmentized signals on vertex i. Second, the graph signals for all vertices at the last time stamp $\mathcal{X}(:, :, h + k - 1)$ are used as an input of GCNs followed by DQN. Hence, we consider the data quality level by looking at the local variations of the last signals and the estimated quality level w_i is used to assign a weight on the loss function defined on the vertex i. We use the mean squared error loss function.

For each vertex i, DQ-LSTM repeatedly reads inputs, predicts outputs, and updates parameters as many as a number of segmentized length k time series.

$$\mathcal{L}_i = \frac{1}{n_i} \sum_{j=1}^{n_i} w_i \|\hat{\mathcal{X}}(i, :, k + j - 1) - \mathcal{X}(i, :, k + j - 1)\|_2^2 + \beta \|\mathbf{\Phi}\|_2^2 \tag{10}$$

where n_i is the number of segmentized series on vertex i and $\hat{\mathcal{X}}(i, :, k + j - 1)$ is a predicted value from a fully connected layer (FC) which reduces a dimension of an output vector from LSTM. L_2 regularization is used to prevent overfitting. Then, the total loss function over all vertices is as follow:

$$\mathcal{L} = \frac{1}{N} \sum_{i=1}^{N} \mathcal{L}_i \tag{11}$$

4 Experiments

In this section, we demonstrate the quality of DQ-LSTM on real-world climate datasets. In the main set of experiments, we evaluate the mean absolute error (MAE) of the predictions produced by DQ-LSTM over entire weather stations. In addition, we investigate the data quality levels produced by DQ-LSTM.

4.1 DATASETS

In order to have a fair comparison, we use real-world meteorological measurements from two commercial weather service providing real-time weather information, Weather Underground(WU)[1] and WeatherBug(WB)[2]. Both services use observations from automated personal weather stations (PWS). In the dataset, all stations are distributed around Los Angeles County and geographical characteristics where the station is located at are provided. These characteristics would be used as a set of input features $\mathbf{V}$ to build a graph structure. The list of the static 11 characteristics is, *Latitude, Longitude, Elevation, Tree fraction, Vegetation fraction, Albedo, Distance from coast, Impervious fraction, Canopy width, Building height,* and *Canopy direction*.

At each station, a number of meteorological signals are observed through the installed instruments. The types of the measurements are *Temperature, Solar radiation, Pressure, Precipitation, Relative humidity, Wind speed*, and *Wind direction*. 2 months observations from each service, July/2015 and August/2015, are used for our experiments.

4.2 GRAPH GENERATION

Since any structural information between a pair of stations is not given, we need to construct a graph of the weather stations. In general graphs, two nodes can be interpreted as similar nodes if they are connected. Thus, as mentioned in Section 2.1, we can compute a distance between two nodes in the feature space. A naive approach to defining the distance is using only the geolocation features, *Latitude* and *Longitude*. However, it might be inappropriate because other features can be significantly different even if two stations are fairly close. For example, the distance between stations in the Elysian park and Downtown LA is less than 2 miles, however, the territorial characteristics are significantly different. Furthermore, the different characteristics (e.g., Tree fraction or impervious fraction) can affect weather observations (especially, temperature due to urban heat island effect). Thus, considering only the physical distance can mislead to compute the correct similarity between two nodes.

To alleviate the issue, we assume that all static features are equally important. This is a reasonable assumption because we do not know which feature is more important and each feature can affect weather measurements. In this experiment, we use Gaussian kernel $e^{(-\gamma\|V_i - V_j\|^2)}$ with $\gamma = 0.2$ and 0.6 for WU and WB, respectively, and make weights less than 0.9 zero (i.e., disconnected).

4.3 BASELINES

Since we evaluate DQ-LSTM by forecasting task, there are a lot of models that have been used to predict future values. First, we compare against a simple LSTM. This model is expected to infer mixed-dependencies among the input multivariate signals and provide a reference error of neural networks based model. Then, we use graph convolutional networks (Kipf & Welling, 2016) which are also able to infer the data quality level from a given dataset. We test a single layer GCN ($K = 1$) and two-layer GCNs ($K = 2$).

4.4 EXPERIMENTAL SETING

Since all the baselines and DQ-LSTM are dependent on the previous observations, we set the same lag length $k = 10$. For the deep recurrent models, the k-steps previous observations are sequentially fed into them to predict next values. We have the same setting for the deep recurrent module, i.e. the 50 units of the hidden states. We use Adam optimizer (Kingma & Ba, 2014) with a learning rate of 0.001 and the objective is given by a mean squared error function. For GCN-LSTM and DQ-LSTM, we evaluate different number of layers (K) of GCN. The final layer always provides a set of scalars for every vertices and we set $\beta = 0.05$ for the $L2$ regularization of the final layer.

For each month dataset, we split it into three subsets, training, validation, and testing sets. The first 60% observations are used to train the models and next 20% validation set is used to tune hyperparameters. Finally, the left 20% testing set is used to report error results. Among given measurements,

[1] https://www.wunderground.com/

[2] http://weather.weatherbug.com/

Table 1: Forecasting mean absolute error (MAE)

	LSTM	**GCN-LSTM** (K=1)	**GCN-LSTM** (K=2)	**DQ-LSTM** (K=0)	**DQ-LSTM** (K=1)
WU7	0.5823 (0.0656)	0.5152 (0.0081)	0.5073 (0.0261)	0.5096 (0.0152)	**0.4788** (0.0111)
WU8	0.5911 (0.0221)	0.5356 (0.0398)	0.5151 (0.0272)	0.5087 (0.0117)	**0.4856** (0.0086)
WB7	0.4725 (0.0277)	0.4687 (0.0348)	0.4411 (0.0321)	0.4588 (0.0148)	**0.4108** (0.0129)
WB8	0.5435 (0.0376)	0.5412 (0.0483)	0.5296 (0.0164)	0.4602 (0.0440)	**0.4574** (0.0178)

Temperature is used as a target measurement, i.e., output of LSTM, and others including Temperature are used as input signals. We repeat 20 times with random initializations to report reliable results.

5 Results and Discussion

5.1 Forecasting experiment

Experimental results are summarized in Table 1. We report the forecasting mean absolute error (MAE) with standard deviations. The two months observations, July and August, are denoted as 7 and 8, and K indicates the number of GCN layers. Overall, models considering a given graph structure outperform a simple LSTM. Note that the graph structure is not given explicitly but constructed by features of vertices. While the connectivities and weights are dependent on the distance function, it cleary shows that knowing neighbor signals of a given node can help predict next value of the node.

Although GCN is able to transfer a given signal of a vertex to a latent representation that is more compact and expressive, it is difficult to learn a mapping function to the data quality level from neighbor signals directly unlike DQ-LSTM which pre-transfers the signals to local variations explicitly. In other word, given signal X, what GCN learns is $w = f(X)$ where w is the data quality we want to infer from data, however, DQ-LSTM learns $w = g(Y = h(X))$ where Y is a local variation matrix given by X in a closed form, h. Thus, lower MAEs of DQ-LSTM verify that our assumption in Section 2.2 is valid and the local variations are a useful metric to measure the data quality level. It is also noticeable that DQ-LSTM with a GCN reports the lowest MAE among other models. This is because the additionally trainable parameters in GCN increase the number of nodes to compute better local variations.

5.2 Node embedding and anomaly detection

As DQ-LSTM can be combined with GCNs, it is also possible to represent each node as an embedding obtained from an output of GCNs. Embeddings from deep neural networks are especially interesting since they can capture *distances* between nodes which are not explicitly provided but implicitly inherent in data. Once the embeddings are extracted, they can be used for further tasks, such as classification and clustering (Grover & Leskovec, 2016; Kipf & Welling, 2016). Furthermore, since the embeddings have low dimensional representations, it is more efficient to visualize the nodes by manifold learning methods, such as t-SNE (Maaten & Hinton, 2008). Visualization with spatiotemporal signals is especially powerful to chase how similarity between nodes changes.

Figure 3 provides embedding distributions over time. Green dots are neighbors of a red dot and they are closely distributed to consist of a cluster. There are two factors that affect embeddings, graph signals and node connectivity. Ideally, connected nodes have observed similar signals and thus, they are mapped closely in the embedding space. However, if one node i measures a fairly different value, the node's embedding will also be far from its neighbors. On the other hand, if one node i has connected with a group of nodes $g \in \mathcal{G}$ and an additional node j which is not a member of $\mathcal{G}$, the i node is affected by the j node as well. If the signals observed at i are similar with the signals at

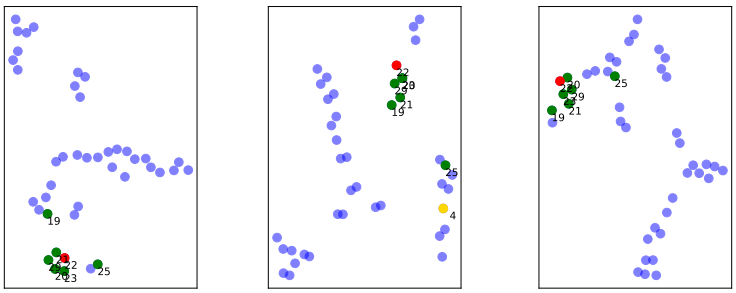

(a) $t = 0$ (b) $t = 4$ (c) $t = 8$

Figure 3: t-SNE visualization of outputs of GCN in DQ-LSTM. Red dot denotes the reference node and green dots are the nearest neighbors of the red dot. (a), (b) and (c) illustrate how the embeddings of spatiotemporal signals changes. At $t = 4$, the 25th node is relatively far from other green nodes because it is connected with the 4th node which is not a neighbor of red dot. All nodes come from Weather Underground.

$g \in \mathcal{G}$, the embedding of i is still close to those of $\{g\}$. However, if the signals of i is close to that of j or the weight of $e(i, j)$ is significantly high, i will be far away from $\{g\}$ in the embedding space. Figure 3b provides an example that a node ($i = 25$) is affected by another node ($j = 4$) which is not included in the cluster (green dots). These properties can be applicable for anomaly detection tasks.

5.3 Data quality analysis

Since we do not have explicit labels for the data quality levels, it is not straightforward to evaluate the inferred data quality from DQ-LSTM. Instead, we can verify the validity of the inferred data quality by looking at high and low quality examples. Table 2 provides observations in Figure 3b. The values ($\mathbf{x}_{25}$) at node 25 (v_{25}) same as $\mathbf{x}_{20}, \mathbf{x}_{21}, \mathbf{x}_{23}$, however, $\mathbf{x}_{25}$ is quite different with $\mathbf{x}_{19}, \mathbf{x}_{22}, \mathbf{x}_{29}$. Moreover, the edge weights between v_{25} and other green nodes are not as large as weights between the green nodes. (v_{25} is much closer to the coast than other green nodes.) As a result, it is not easy for v_{25} to be close to the green nodes because of the opposite behaviors (v_{20}, v_{21}, and v_{23} pull v_{25} and v_{19}, v_{22}, and v_{29} push v_{25}). On the other hand, since $\mathbf{x}_{25}$ is similar with $\mathbf{x}_4$ and $W_{25,4}$ is large, v_{25} is more likely close to v_4 as in Figure 3b.

Table 2: Observations and inferred DQL

	Temp	Press	Humid	DQL
4	28.4	1013.1	57.7	0.022
19	34.5	1012.2	35.8	0.038
20	28.1	1011.5	58.7	0.039
21	28.1	1011.5	58.7	0.039
22	38.1	1006.2	32.8	0.039
23	28.1	1011.5	58.7	0.038
25	28.1	1011.5	58.7	0.030
29	35.3	1014.3	40.0	0.039

Note that v_4 has far different geological features compared to features of green nodes and thus, v_4 is not connected to v_{22} or other green nodes excluding v_{25}. Consequently, v_{25} is the bridge node between v_4 and the cluster of v_{22}. Under our assumption (See Section 2.2) it is natural to have high local variations at a bridge node since connected clusters on the other side have different features and therefore, the bridge node highly likely has a lower data quality level due to the heterogenity. As Table 2 provides, w_{25} is the lowest number among the green nodes and the data quality levels are correctly inferred.

6 Conclusion

In this work, we study a model that enables the automatically inferring data quality for spatiotemporal data. While existing work has typically addressed the problem by assuming that all the signals are equally reliable over time, we argue that it is important to differentiate the data quality because the signals come from heterogeneous source. To address the issue, we propose the formulation for the data quality levels which are assigned to different sources and inferred from a given dataset. We evaluate the concept of the data quality by comparing other baselines in the weather forecasting task.

REFERENCES

Mikhail Belkin and Partha Niyogi. Laplacian eigenmaps and spectral techniques for embedding and clustering. In *Advances in neural information processing systems*, pp. 585–591, 2002.

Joan Bruna, Wojciech Zaremba, Arthur Szlam, and Yann LeCun. Spectral networks and locally connected networks on graphs. *arXiv preprint arXiv:1312.6203*, 2013.

Siheng Chen, Aliaksei Sandryhaila, José MF Moura, and Jelena Kovacevic. Signal denoising on graphs via graph filtering. In *Signal and Information Processing (GlobalSIP), 2014 IEEE Global Conference on*, pp. 872–876. IEEE, 2014.

Fan RK Chung. *Spectral graph theory*. Number 92. American Mathematical Soc., 1997.

Michaël Defferrard, Xavier Bresson, and Pierre Vandergheynst. Convolutional neural networks on graphs with fast localized spectral filtering. In *Advances in Neural Information Processing Systems*, pp. 3844–3852, 2016.

Aditya Grover and Jure Leskovec. node2vec: Scalable feature learning for networks. In *Proceedings of the 22nd ACM SIGKDD international conference on Knowledge discovery and data mining*, pp. 855–864. ACM, 2016.

David K Hammond, Pierre Vandergheynst, and Rémi Gribonval. Wavelets on graphs via spectral graph theory. *Applied and Computational Harmonic Analysis*, 30(2):129–150, 2011.

Mikael Henaff, Joan Bruna, and Yann LeCun. Deep convolutional networks on graph-structured data. *arXiv preprint arXiv:1506.05163*, 2015.

Sepp Hochreiter and Jürgen Schmidhuber. Long short-term memory. *Neural computation*, 9(8): 1735–1780, 1997.

Joseph Juran and A Blanton Godfrey. Quality handbook. *Republished McGraw-Hill*, pp. 173–178, 1999.

Diederik Kingma and Jimmy Ba. Adam: A method for stochastic optimization. *arXiv preprint arXiv:1412.6980*, 2014.

Thomas N Kipf and Max Welling. Semi-supervised classification with graph convolutional networks. *arXiv preprint arXiv:1609.02907*, 2016.

Alex Krizhevsky, Ilya Sutskever, and Geoffrey E Hinton. Imagenet classification with deep convolutional neural networks. In *Advances in neural information processing systems*, pp. 1097–1105, 2012.

Yaguang Li, Rose Yu, Cyrus Shahabi, and Yan Liu. Graph convolutional recurrent neural network: Data-driven traffic forecasting. *arXiv preprint arXiv:1707.01926*, 2017.

Laurens van der Maaten and Geoffrey Hinton. Visualizing data using t-sne. *Journal of Machine Learning Research*, 9(Nov):2579–2605, 2008.

Jonathan Mei and José MF Moura. Signal processing on graphs: Estimating the structure of a graph. In *Acoustics, Speech and Signal Processing (ICASSP), 2015 IEEE International Conference on*, pp. 5495–5499. IEEE, 2015.

Ali Yener Mutlu, Edward Bernat, and Selin Aviyente. A signal-processing-based approach to time-varying graph analysis for dynamic brain network identification. *Computational and mathematical methods in medicine*, 2012, 2012.

Xuesong Shi, Hui Feng, Muyuan Zhai, Tao Yang, and Bo Hu. Infinite impulse response graph filters in wireless sensor networks. *IEEE Signal Processing Letters*, 22(8):1113–1117, 2015.

Shuang Song, Kamalika Chaudhuri, and Anand Sarwate. Learning from data with heterogeneous noise using sgd. In *Artificial Intelligence and Statistics*, pp. 894–902, 2015.

Ruth Urner, Shai Ben David, and Ohad Shamir. Learning from weak teachers. In *Artificial Intelligence and Statistics*, pp. 1252–1260, 2012.

Ulrike Von Luxburg. A tutorial on spectral clustering. *Statistics and computing*, 17(4):395–416, 2007.

Bing Yu, Haoteng Yin, and Zhanxing Zhu. Spatio-temporal graph convolutional neural network: A deep learning framework for traffic forecasting. *arXiv preprint arXiv:1709.04875*, 2017.

Qingbao Yu, Erik B Erhardt, Jing Sui, Yuhui Du, Hao He, Devon Hjelm, Mustafa S Cetin, Srinivas Rachakonda, Robyn L Miller, Godfrey Pearlson, et al. Assessing dynamic brain graphs of time-varying connectivity in fmri data: application to healthy controls and patients with schizophrenia. *Neuroimage*, 107:345–355, 2015.

Chicheng Zhang and Kamalika Chaudhuri. Active learning from weak and strong labelers. In *Advances in Neural Information Processing Systems*, pp. 703–711, 2015.

Dengyong Zhou and Bernhard Schölkopf. A regularization framework for learning from graph data. In *ICML workshop on statistical relational learning and Its connections to other fields*, volume 15, pp. 67–68, 2004.

Xiaofan Zhu and Michael Rabbat. Graph spectral compressed sensing for sensor networks. In *Acoustics, Speech and Signal Processing (ICASSP), 2012 IEEE International Conference on*, pp. 2865–2868. IEEE, 2012.