LEXMAE: LEXICON-BOTTLENECKED PRETRAINING FOR LARGE-SCALE RETRIEVAL

Anonymous authors
Paper under double-blind review

ABSTRACT

In large-scale retrieval, the lexicon-weighting paradigm, learning weighted sparse representations in vocabulary space, has shown promising results with high quality and low latency. Despite it deeply exploiting the lexicon-representing capability of pre-trained language models, a crucial gap remains between language modeling and lexicon-weighting retrieval – the former preferring certain or low-entropy words whereas the latter favoring pivot or high-entropy words – becoming the main barrier to lexicon-weighting performance for large-scale retrieval. To bridge this gap, we propose a brand-new pre-training framework, lexicon-bottlenecked masked autoencoder (LexMAE), to learn importance-aware lexicon representations. Essentially, we present a lexicon-bottlenecked module between a normal language modeling encoder and a weakened decoder, where a continuous bag-of-words bottleneck is constructed to learn a lexicon-importance distribution in an unsupervised fashion. The pre-trained LexMAE is readily transferred to the lexicon-weighting retrieval via fine-tuning. On the ad-hoc retrieval benchmark, MS-Marco, it achieves 42.6% MRR@10 with 45.8 QPS for the passage dataset and 44.4% MRR@100 with 134.8 QPS for the document dataset, by a CPU machine. And LexMAE shows state-of-the-art zero-shot transfer capability on BEIR benchmark with 12 datasets.

1 INTRODUCTION

Large-scale retrieval, also known as first stage retrieval (Cai et al., 2021), aims to fetch top *query*-relevant *documents*[1] from a huge collection. In addition to its indispensable roles in dialogue systems (Zhao et al., 2020), question answering (Karpukhin et al., 2020), search engines, etc., it also has been surging in recent cutting-edge topics, e.g., retrieval-augmented generation (Lewis et al., 2020) and retrieval-augmented language modeling (Guu et al., 2020). As there are millions to billions of documents in a collection, efficiency is the most fundamental prerequisite for large-scale retrieval. To this end, query-agnostic document representations (i.e., indexing the collection independently) and lightweight relevance metrics (e.g., cosine similarity, dot-product) have become the common practices to meet the prerequisite – usually achieved by a two-tower structure (Reimers & Gurevych, 2019), a.k.a., bi-encoder and dual-encoder, in representation learning literature.

Besides the prevalent 'dense-vector retrieval' paradigm that encodes both queries and documents in the same low-dimension, real-valued latent semantic space (Karpukhin et al., 2020), another retrieval paradigm, 'lexicon-weighting retrieval', aims to leverage weighted sparse representation in vocabulary space (Formal et al., 2021a; Shen et al., 2022). It learns to use a few lexicons in the vocabulary and assign them with weights to represent queries and documents – sharing a high-level inspiration with BM25 but differing in dynamic (with compression and expansion) lexicons and their importance weights learned in an end-to-end manner. Although learning the representations in such a high-dimensional vocabulary space seems intractable with limited human-annotated query-document pairs, recent surging pre-trained language modeling (PLM), especially the masked language modeling (MLM), facilitates transferring context-aware lexicon-coordinate knowledge into lexicon-weighting retrieval by fine-tuning the PLM on the annotated pairs (Formal et al., 2021b;a; Shen et al., 2022). Here, coordinate terms (full of synonyms and concepts) are highly related to relevance-centric tasks and mitigate the lexicon mismatch problem (Cai et al., 2021), leading to superior retrieval quality.

[1]Each entry of a collection could also be a *sentence*, a *passage*, etc.

Due to the pretraining-finetuning consistency with the same output vocabulary space, lexicon-based retrieval methods can fully leverage a PLM, including its masked language modeling (MLM) head, leading to better search quality (e.g., $\sim 1.0\%$ MRR@10 improvement over dense-vector ones by fine-tuning the same PLM initialization (Formal et al., 2021a; Hofstätter et al., 2020)). Meantime, attributed to the high-dimensional sparse-controllable representations (Yang et al., 2021; Lassance & Clinchant, 2022), these methods usually enjoy higher retrieval efficiency than dense-vector ones (e.g., $10\times$ faster with the identical performance in our experiments).

Nonetheless, there still exists a subtle yet crucial gap between the pre-training language modeling and the downstream lexicon-weighting objectives. That is, MLM (Devlin et al., 2019) aims to recover a word back given its contexts, so it inclines to assign high scores to certain (i.e., low-entropy) words, but these words are most likely to be articles, prepositions, etc., or belong to collocations or common phrases. Therefore, language modeling is in conflict with the lexicon-weighting representation for relevance purposes, where the latter focuses more on the high-entropy words (e.g., subject, predicate, object, modifiers) that are essential to the semantics of a query or document. These can explain, in our experiments when being fine-tuned under the paradigm of lexicon-weighting retrieval (Formal et al., 2021a), why a moderate PLM (i.e., DistilBERT) can even outperform a relatively large one (i.e., BERT-base) and why a well-trained PLM (e.g., RoBERTa) cannot even achieve a convergence.

To mitigate the gap, in this work we propose a brand-new pre-training framework, dubbed lexicon-bottlenecked masked autoencoder (LexMAE), to learn importance-aware lexicon representations for the transferable knowledge towards large-scale lexicon-weighting retrieval. Basically, LexMAE pre-trains a language modeling encoder for document-specific lexicon-importance distributions over the whole vocabulary to reflect each lexicon's contribution to the document reconstruction. Motivated by recent dense bottleneck-enhanced pre-training (Gao & Callan, 2022; Liu & Shao, 2022; Wang et al., 2022), we present to learn the lexicon-importance distributions in an unsupervised fashion by constructing continuous bag-of-words (CBoW) bottlenecks upon the distributions.

Thereby, LexMAE pre-training architecture consists of three components: i) a language modeling encoder (as most other PLMs, e.g., BERT, RoBERTa), ii) a lexicon-bottlenecked module, and iii) a weakened masking-style decoder. Specifically, a mask-corrupted document from the collection is passed into the *language modeling encoder* to produce token-level LM logits in the vocabulary space. Besides an MLM objective for generic representation learning, a max-pooling followed by a normalization function is applied to the LM logits to derive a lexicon-importance distribution. To unsupervisedly learn such a distribution, the *lexicon-bottlenecked module* leverages it as the weights to produce a CBoW dense bottleneck, while the *weakened masking-style decoder* is asked to reconstruct the aggressively masked document from the bottleneck. Considering the shallow decoder and its aggressive masking, the decoder in LexMAE is prone to recover the masked tokens on the basis of the CBoW bottleneck, and thus the LexMAE encoder assigns higher importance scores to essential vocabulary lexicons of the masked document but lower to trivial ones. This closely aligns with the target of the lexicon-weighting retrieval paradigm and boosts its performance.

After pre-training LexMAE on large-scale collections, we fine-tune its language modeling encoder to get a lexicon-weighting retriever, improving previous state-of-the-art performance by 1.5% MRR@10 with $\sim 13\times$ speed-up on the ad-hoc passage retrieval benchmark. Meantime, LexMAE also delivers new state-of-the-art results (44.4% MRR@100) on the ad-hoc document retrieval benchmark. Lastly, LexMAE shows great zero-shot transfer capability and achieves state-of-the-art performance on BEIR benchmark with 12 datasets, e.g., Natural Questions, HotpotQA, and FEVER.

2 Related Work

PLM-based Dense-vector Retrieval. Recently, pre-trained language models (PLM), e.g., BERT (Devlin et al., 2019), RoBERTa (Liu et al., 2019), DeBERTa (He et al., 2021b), have been proven generic and effective when transferred to a broad spectrum of downstream tasks via fine-tuning. When transferring PLMs to large-scale retrieval, a ubiquitous paradigm is known as 'dense-vector retrieval' (Xiong et al., 2021) – encoding both queries and documents in the same low-dimension semantic space and then calculating query-document relevance scores on the basis of spatial distance. However, dense-vector retrieval methods suffer from the objective gap between lexicon-recovering language model pre-training and document-compressing dense-vector fine-tuning. Although a natural remedy has been dedicated to the gap by constructing pseudo query-document pairs (Lee et al., 2019;

Chang et al., 2020; Gao & Callan, 2022; Zhou et al., 2022a) or/and enhancing bottleneck dense representation (Lu et al., 2021; Gao & Callan, 2021; 2022; Wang et al., 2022; Liu & Shao, 2022), the methods are still limited by their intrinsic representing manners – dense-vector leading to large index size and high retrieval latency – applying speed-up algorithms, product-quantization (Zhan et al., 2022), however resulting in dramatic drops (e.g., $-3\% \sim 4\%$ by Xiao et al. (2022)).

Lexicon-weighing Retrieval. In contrast to the almost unlearnable BM25, lexicon-weighing retrieval methods, operating on lexicon-weights by a neural model, are proposed to exploit language models for term-based retrieval (Nogueira et al., 2019b;a; Formal et al., 2021b;a; 2022). According to different types of language models, there are two lines of work: based on causal language models (CLM) (Radford et al.; Raffel et al., 2020), (Nogueira et al., 2019a) use the concurrence between a document and a query for lexicon-based sparse representation expansion. Meantime, based on masked language models (MLM) (Devlin et al., 2019; Liu et al., 2019), (Formal et al., 2021b) couple the original word with top coordinate terms (full of synonyms and concepts) from the pre-trained MLM head. However, these works directly fine-tune the pre-trained language models, regardless of the objective mismatch between general language modeling and relevance-oriented lexicon weighting.

3 LexMAE: Lexicon-bottlenecked Masked Autoencoder

Overview of LexMAE Pre-training. As illustrated in Figure 1, our lexicon-bottlenecked masked autoencoder (LexMAE) contains one encoder and one decoder with masked inputs in line with the masked autoencoder (MAE) family (He et al., 2021a; Liu & Shao, 2022), while is equipped with a lexicon-bottlenecked module for document-specific lexicon-importance learning.

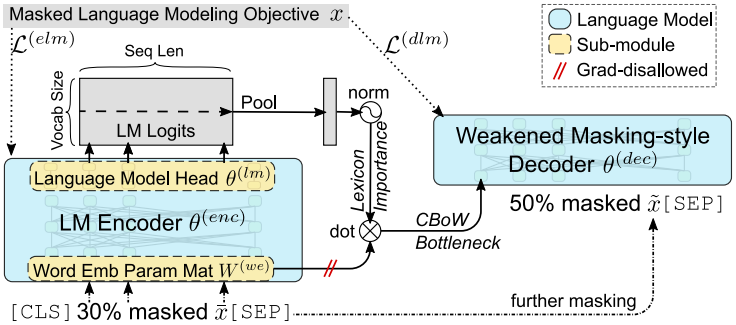

Figure 1: An illustration of lexicon-bottlenecked masked autoencoder (LexMAE) pre-training architecture.

Given a piece of free-form text, x, from a large-scale collection, $\mathbb{D}$, we aim to pre-train a language modeling encoder, $\theta^{(\text{enc})}$, that represents x with weighted lexicons in the vocabulary space, i.e., $\boldsymbol{a} \in [0,1]^{|\mathbb{V}|}$. $\mathbb{V}$ denotes the whole vocabulary. Here, each $a_i = P(\text{w} = w_i|x;\theta^{(\text{enc})})$ with $w_i \in \mathbb{V}$ denotes the importance degree of the lexicon w_i to the whole text x. To learn the distribution $\boldsymbol{a}$ for x in an unsupervised fashion, an additional decoder $\theta^{(\text{dec})}$ is asked to reconstruct x based on $\boldsymbol{a}$.

3.1 Language Modeling Encoder

Identical to most previous language modeling encoders, e.g., BERT (Devlin et al., 2019), the language modeling encoder, $\theta^{(\text{enc})}$, in LexMAE is composed of three parts, i.e., a *word embedding module* mapping the discrete tokens of x to dense vectors, a *multi-layer Transformer* (Vaswani et al., 2017) for deep contextualization, and a *language modeling head* mapping back to vocabulary space $\mathbb{R}^{|\mathbb{V}|}$.

First, following the common practice of pre-training the encoder unsupervisedly, a masked language modeling (MLM) objective is employed to pre-train $\theta^{(\text{enc})}$. Formally, given a piece of text $x \in \mathbb{D}$, a certain percentage ($\alpha\%$) of the tokens in x are masked to obtain $\bar{x}$, in which 80% replaced with a special token `[MASK]`, 10% replaced with a random token in $\mathbb{V}$, and the remaining kept unchanged (Devlin et al., 2019). Then, the masked $\bar{x}$ is fed into the language modeling encoder, $\theta^{(\text{enc})}$, i.e.,

$$\boldsymbol{S}^{(\text{enc})} = \text{Transformer-LM}(\bar{x};\theta^{(\text{enc})}) \in \mathbb{R}^{|\mathbb{V}| \times n}, \tag{1}$$

where $\boldsymbol{S}^{(\text{enc})}$ denotes LM logits. Lastly, the MLM objective is to minimize the following loss,

$$L^{(\text{elm})} = -\sum_{\mathbb{D}} \sum_{j \in \mathbb{M}^{(\text{enc})}} \log P(\text{w}^j = x_j|\bar{x};\theta^{(\text{enc})}), \text{ where } P(\text{w}^j) := \text{softmax}(\boldsymbol{S}^{(\text{enc})}_{:,j}), \tag{2}$$

where $\mathbb{M}^{(\text{enc})}$ denotes the set of masked indices of the tokens in $\bar{x}$, w^j denotes the discrete variable over $\mathbb{V}$ at the j-th position of x, and x_j is its original token (i.e., golden label of the MLM objective).

3.2 LEXICON-BOTTLENECKED MODULE

Given token-level logits from Eq.(1) defined in $\mathbb{V}$, we calculate a lexicon-importance distribution by

$$\boldsymbol{a} \coloneqq P(\mathrm{w}|\bar{x};\theta^{(\text{enc})}) = \text{Normalize}(\text{Max-Pool}(\boldsymbol{S}^{(\text{enc})})) \in [0,1]^{|\mathbb{V}|}, \tag{3}$$

where $\text{Max-Pool}(\cdot)$ is pooling along with its sequence axis, which is proven more effective than mean-pooling in lexicon representation (Formal et al., 2021a), $\text{Normalize}(\cdot)$ is a normalization function (let $\sum a_i = 1$), which we simply take $\text{softmax}(\cdot)$ in our main experiments. $P(\mathrm{w}|\bar{x};\theta^{(\text{enc})})$ is lexicon-importance distribution over $\mathbb{V}$ to indicate which lexicons in $\mathbb{V}$ is relatively important to x.

The main obstacle to learning the lexicon-importance distribution $P(\mathrm{w}|\bar{x};\theta^{(\text{enc})})$ is that we do not have any general-purpose supervised signals. Inspired by recent bottleneck-enhanced dense representation learning (Gao & Callan, 2022; Liu & Shao, 2022; Wang et al., 2022), we propose to leverage the lexicon-importance distribution as a clue for reconstructing x back. As such, our language modeling encoder will be prone to focus more on the pivot or essential tokens/words in x. However, it is intractable to directly regard the high-dimensional distribution vector $\boldsymbol{a} \in [0,1]^{|\mathbb{V}|}$ as a bottleneck since i) the distribution over the whole $\mathbb{V}$ has enough capacity to hold most semantics of x (Yang et al., 2018), making the bottleneck less effective, and ii) the high-dimensional vector is hardly fed into a decoder for representation learning and text reconstruction.

Therefore, we further propose to construct a continuous bag-of-words (CBoW) bottleneck following the lexicon-importance distribution $P(\mathrm{w}|\bar{x};\theta^{(\text{enc})})$ derived from Eq.(3). That is

$$\boldsymbol{b} \coloneqq \mathbb{E}_{w_i \sim P(\mathrm{w}|\bar{x};\theta^{(\text{enc})})}[\boldsymbol{e}^{(w_i)}] = \boldsymbol{W}^{(\text{we})}\boldsymbol{a}. \tag{4}$$

Here, $\boldsymbol{W}^{(\text{we})} = [\boldsymbol{e}^{(w_1)}, \boldsymbol{e}^{(w_2)}, \dots] \in \mathbb{R}^{d\times|\mathbb{V}|}$ denotes the learnable word embedding matrix in the parameters $\theta^{(\text{enc})}$ of language modeling encoder, where d denotes embedding size, $\boldsymbol{e}^{(w_i)} \in \mathbb{R}^d$ is a word embedding of the lexicon w_i. Thereby, $\boldsymbol{b} \in \mathbb{R}^d$ stands for dense-vector CBoW bottleneck, upon which a decoder (will be detailed in the next sub-section) is asked to reconstruct the original x back.

Remark. As aforementioned in our Introduction, there exists a conflict between MLM and lexicon-importance objectives, but we still apply an MLM objective in our encoder. This is because i) the MLM objective can serve as a regularization term to ensure the original token in x receive relatively high scores in contrast to its coordinate terms and ii) the token-level noise introduced by the MLM task has been proven effective in robust learning.

3.3 WEAKENED MASKING-STYLE DECODER

Lastly, to instruct the bottleneck representation $\boldsymbol{b}$ and consequently learn the lexicon-importance distribution $P(\mathrm{w}|\bar{x};\theta^{(\text{enc})})$, we leverage a decoder to reconstruct x upon $\boldsymbol{b}$. In line with recent bottleneck-enhanced neural structures (Gao & Callan, 2022; Wang et al., 2022), we employ a weakened masking-style decoder parameterized by $\theta^{(\text{dec})}$, which pushes the decoder to rely heavily on the bottleneck representation. It is noteworthy that the 'weakened' is reflected by two-fold: i) aggressively masking strategy and ii) shallow Transformer layers (says two layers).

In particular, given the masked input at the encoder side, $\bar{x}$, we first apply an extra $\beta\%$ masking operation, resulting in $\tilde{x}$. That is, the decoder is required to recover all the masked tokens that are also absent in the encoder, which prompts the encoder to compress rich contextual information into the bottleneck. Then, we prefix $\tilde{x}$ with the bottleneck representation b, i.e., replacing the special token `[CLS]` with the bottleneck. Therefore, our weakened masking-style decoding with a Transformer-based language modeling decoder can be formulated as

$$\boldsymbol{S}^{(\text{dec})} = \text{Transformer-LM}(\boldsymbol{b}, \tilde{x}; \theta^{(\text{dec})}) \in \mathbb{R}^{|\mathbb{V}|\times n}, \tag{5}$$

where $\theta^{(\text{dec})}$ parameterizes this weakened masking-style decoder. Lastly, similar to the MLM at the encoder side, the loss function is defined as

$$L^{(\text{dlm})} = -\sum_{\mathbb{D}} \sum_{j\in\mathbb{M}^{(\text{dec})}} \log P(\mathrm{w}^j = x_j|\tilde{x};\theta^{(\text{dec})}), \text{ where } P(\mathrm{w}^j) \coloneqq \text{softmax}(\boldsymbol{S}^{(\text{dec})}_{:,j}), \tag{6}$$

where $\mathbb{M}^{(\text{dec})}$ denotes the set of masked indices of the tokens in the decoder's input, $\tilde{x}$.

3.4 PRE-TRAINING OBJECTIVE & FINE-TUNING FOR LEXICON-WEIGHTING RETRIEVER

The final loss of pre-training LexMAE is an addition of the losses defined in Eq.(2) and Eq.(6), i.e.,

$$L^{(\text{lm})} = L^{(\text{elm})} + L^{(\text{dlm})}. \tag{7}$$

Meanwhile, we tie all word embedding metrics in our LexMAE pre-training architecture, including the word embedding modules and language model heads of both the encoder & decoder, as well as $\boldsymbol{W}^{(\text{we})}$ in Eq.(4). It is noteworthy that we cut-off the gradient back-propagation for $\boldsymbol{W}^{(\text{we})}$ in Eq.(4) to make the training focus only on the lexicon-importance distribution $P(\text{w}|\bar{x};\theta^{(\text{enc})})$ rather than $\boldsymbol{W}^{(\text{we})}$.

Task Definition of Downstream Large-scale Retrieval. Given a collection containing a number of documents, i.e., $\mathbb{D} = \{d_i\}_{i=1}^{|\mathbb{D}|}$, and a query q, a retriever aims to fetch a list of text pieces $\bar{\mathbb{D}}_q$ to contain all relevant ones. Generally, this is based on a relevance score between q and every document d_i in a Siamese manner, i.e., $< \text{Enc}(q), \text{Enc}(d_i) >$, where Enc is an arbitrary representation model (e.g., neural encoders) and $< \cdot, \cdot >$ denotes a lightweight relevance metric (e.g., dot-product).

To transfer LexMAE into large-scale retrieval, we get rid of its decoder but only fine-tune the language modeling encoder for the lexicon-weighting retriever. Basically, to leverage a language modeling encoder for lexicon-weighting representations, we adopt (Formal et al., 2021a) and represent a piece of text, x, in high-dimensional vocabulary space by

$$\boldsymbol{v}^{(x)} = \log(1 + \text{Max-Pool}(\max(\text{Transformer-LM}(x;\theta^{(\text{enc})}), 0))) \in \mathbb{R}*^{|\mathbb{V}|}, \tag{8}$$

where $\max(\cdot, 0)$ ensures all values greater than or equal to zero for upcoming sparse requirements, and the saturation function $\log(1 + \text{Max-Pool}(\cdot))$ prevents some terms from dominating.

In contrast to a classification task, the retrieval tasks are formulated as contrastive learning problems. That is, only a limited number of positive documents, $d_+^{(q)}$, is provided for a query q so we need sample a set of negative documents, $\mathbb{N}^{(q)} = \{d_-^{(q)}, \dots\}$, from $\mathbb{D}$ for the q. And we will dive into various sampling strategies to get $\mathbb{N}^{(q)}$ in §A. Note that if no confusion arises, we omit the superscript (q) that indicates 'a query-specific' for clear demonstrations. By following Shen et al. (2022), we can first derive a likelihood distribution over the positive $\{d_+\}$ and negative $\mathbb{N}$ documents, i.e.,

$$\boldsymbol{p} := P(\text{d}|q, \{d_+\} \cup \mathbb{N}; \theta^{(\text{enc})}) = \frac{\exp(\boldsymbol{v}^{(q)T}\boldsymbol{v}^{(d)})}{\sum_{d' \in \{d_+\}\cup\mathbb{N}} \exp(\boldsymbol{v}^{(q)T}\boldsymbol{v}^{(d')})}, \ \forall d \in \{d_+\} \cup \mathbb{N} \tag{9}$$

where $\boldsymbol{v}^{(\cdot)} \in \mathbb{R}*^{|\mathbb{V}|}$ derived from Eq.(8) denotes a lexicon-weighting representation for a query q or a document d. Then, the loss function of the contrastive learning towards this retrieval task is defined as

$$L^{(\text{r})} = \sum_q -\log P(\text{d} = d_+|q, \{d_+\} \cup \mathbb{N}; \theta^{(\text{enc})}) + \lambda \, \text{FLOPS}(q, d) = \sum -\log \boldsymbol{p}_{[\text{d}=d_+]} + \lambda \, \text{FLOPS}, \tag{10}$$

where $\text{FLOPS}(\cdot)$ denotes a regularization term for representation sparsity (Paria et al., 2020) as first introduced by Formal et al. (2021b) and λ denotes a hyperparameter of it loss weight.

Note that, to train a competitive retriever, we adapt the fine-tuning pipeline in (Wang et al., 2022), which consists of three stages (please refer to §A & §B for our training pipeline and inference details).

4 EXPERIMENT

Benchmark Datasets. Following Formal et al. (2021a), we first employ the widely-used passage retrieval datasets, MS-Marco (Nguyen et al., 2016). We only leverage its official queries (no augmentations (Ren et al., 2021b)), and report for MS-Marco Dev set, TREC Deep Learning 2019 set (Craswell et al., 2020), and TREC Deep Learning 2020 set (Craswell et al., 2021). Besides, we evaluate the zero-shot transferability of our model on BEIR benchmark (Thakur et al., 2021). We employ twelve datasets covering semantic relatedness and relevance-based retrieval tasks (i.e., TREC-COVID, NFCorpus, Natural Questions, HotpotQA, FiQA, ArguAna, Tóuche-2020, DBPedia, Scidocs, Fever, Climate-FEVER, and SciFact) in the BEIR benchmark as they are widely-used across most previous retrieval works. Lastly, to check if our LexMAE is also compatible with long-context retrieval, we conduct document retrieval evaluations on MS-Marco Doc Dev. Note that if not specified in our analyzing sections of the remainder, the numbers are reported on MS-Marco passage dev.

Table 1: Passage retrieval results on MS-Marco Dev, TREC Deep Learning 2019 (DL'19), and TREC Deep Learning 2020 (DL'20). M@10 and nDCG denotes MRR@10 and nDCG@10, respectively. The 'coCon' denotes the coCondenser that continually pre-trained BERT in an unsupervised manner, and the subscript of a pre-trained model denotes its scale (e.g., 'base' equal to 110M parameters). †Please refer to Table 8.

Method	Pre-trained model	Reranker distilled	Hard negs	Multi Vec	MS-Marco Dev			DL'19	DL'20
					M@10	R@100	R@1k	nDCG	nDCG
Dense-vector Retriever									
ANCE (Xiong et al., 2021)	$\text{RoBERTa}_{\text{b}}$				33.8	86.2	96.0	65.4	64.6
ADORE (Zhan et al., 2021)	$\text{RoBERTa}_{\text{b}}$		✓		34.7	87.6	-	68.3	-
TAS-B (Hofstätter et al., 2021)	DistilBERT	✓			34.7	-	97.8	71.2	69.3
TCT-ColBERT (Lin et al., 2021)	$\text{BERT}_{\text{base}}$	✓	✓		35.9	-	97.0	71.9	-
coCondenser (Gao & Callan, 2022)	$\text{coCon}_{\text{base}}$		✓		38.2	-	98.4	71.7	68.4
ColBERTv1 (Khattab & Zaharia, 2020)	$\text{BERT}_{\text{base}}$			✓	36.0	-	96.8	-	-
ColBERTv2 (Santhanam et al., 2021)	$\text{BERT}_{\text{base}}$	✓	✓	✓	39.7	-	98.4	-	-
RocketQAv2 (Ren et al., 2021b)	$\text{ERNIE}_{\text{base}}$	✓	✓		38.8	-	-†	-	-
AR2 (Zhang et al., 2022)	$\text{coCon}_{\text{base}}$	✓	✓		39.5	-	-†	-	-
SimLM (Wang et al., 2022)	$\text{SimLM}_{\text{base}}$	✓	✓		41.1	-	98.7	71.2	69.7
Lexicon-base or Sparse Retriever									
BM25 (Dai & Callan, 2019)	-				18.5	58.5	85.7	51.2	47.7
DeepCT (Dai & Callan, 2019)	$\text{BERT}_{\text{base}}$				24.3	-	91.3	55.1	-
RepCONC (Zhan et al., 2022)	$\text{RoBERTa}_{\text{b}}$		✓		34.0	86.4	-	66.8	-
DistilSPLADE-max (Formal et al., 2021a)	DistilBERT	✓			36.8	-	97.9	72.9	-
SelfDistil (Formal et al., 2022)	DistilBERT	✓	✓		36.8	-	98.0	72.3	-
EnsembleDistil (Formal et al., 2022)	DistilBERT	✓	✓		36.9	-	97.9	72.1	-
Co-SelfDistil (Formal et al., 2022)	$\text{coCon}_{\text{base}}$	✓	✓		37.5	-	98.4	73.0	-
Co-EnsembleDistil (Formal et al., 2022)	$\text{coCon}_{\text{base}}$	✓	✓	✓	38.0	-	98.2	73.2	-
LexMAE	$\text{LexMAE}_{\text{base}}$	✓	✓		**42.6**	**93.1**	**98.8**	**73.7**	**72.8**

Evaluation Metrics. We report MRR@10 (M@10) and Recall@1/50/100/1K for MS-Marco Dev (passage), and report NDCG@10 for both TREC Deep Learning 2019 (passage) and TREC Deep Learning 2020 (passage). Moreover, NDCG@10 is reported on BEIR benchmark, while MRR@100 and Recall@100 are reported for MS-Marco Doc. Regarding R@N metric, we found there are two kinds of calculating ways, and we strictly follow the official evaluation (please refer to §C).

Setups. We pre-train on the MS-Marco collection (Nguyen et al., 2016), where most hyperparameters are identical to (Wang et al., 2022): the encoder is initialized by $\text{BERT}_{\text{base}}$ (Devlin et al., 2019) whereas the others are randomly initialized, the batch size is set to 2048, the max length is set to 144, the learning rate is set to 3×10^{-4}, the number of training steps is 80k, the masking percentage ($\alpha\%$) of encoder is set to 30%, and that ($\alpha + \beta\%$) of decoder is set to 50%. Meantime, the random seed is always 42, and the pre-training is completed on $8\times$A100 GPUs within 14h. Please refer to §A.2 for our fine-tuning setups. *Our implemented codes and trained models will be made public.*

4.1 Main Evaluation

MS-Marco Dev (Passage Retrieval). First, we compare our fine-tuned LexMAE with a wide range of baselines and competitors to perform large-scale retrieval in Table 1. It is shown that our method substantially outperforms the previous best retriever, SimLM, by a very large margin (+1.5% MRR@10) and achieves a new state-of-the-art performance. Standing with different retrieval paradigms and thus different bottleneck constructions, such a large performance margin verifies the superiority of lexicon-weighting retrieval when a proper initialization is given. Meantime, the LexMAE is dramatically superior (+5.1% MRR@10) to its baseline (Formal et al., 2022), Co-Self-Disil, with the same neural model scale but different model initialization (coCondenser (Gao & Callan, 2022) v.s. LexMAE). This verifies that our lexicon-bottlenecked pre-training is more effective than the dense-bottlenecked one in lexicon-weighting retrieval.

TREC Deep Learning 2019 & 2020. As shown in Table 1, we also evaluate our LexMAE on both the TREC Deep Learning 2019 (DL'19) and the TREC Deep Learning 2020 (DL'20). It is observed that LexMAE consistently achieves new state-of-the-art performance on both datasets.

Table 2: Zero-shot transfer performance (nDCG@10) on BEIR benchmark. 'BEST ON' and 'AVERAGE' do not take the in-domain result into account. 'ColBERT' is its v2 version (Santhanam et al., 2021).

Method	BM25	DocT5	SPLADE	ColBERT	DPR	ANCE	GenQ	TAS-B	Contriever	UnifieR	**LexMAE**
In-Domain	22.5	33.8	43.3	42.5	-	38.8	40.8	40.8	-	47.1	**48.0**
TREC-COVID	65.6	71.3	71.0	73.8	33.2	65.4	61.9	48.1	59.6	71.5	**76.3**
NFCorpus	32.5	32.8	33.4	33.8	18.9	23.7	31.9	31.9	32.8	32.9	**34.7**
NQ	32.9	39.9	52.1	**56.2**	47.4	44.6	35.8	46.3	49.8	51.4	**56.2**
HotpotQA	60.3	58.0	68.4	66.7	39.1	45.6	53.4	58.4	63.8	66.1	**71.6**
FiQA	23.6	29.1	33.6	**35.6**	11.2	29.5	30.8	30.0	32.9	31.1	35.2
ArguAna	31.5	34.9	47.9	46.3	17.5	41.5	49.3	42.9	44.6	39.0	**50.0**
Tóuche-2020	**36.7**	34.7	27.2	26.3	13.1	24.0	18.2	16.2	23.0	30.2	29.0
DBPedia	31.3	33.1	43.5	**44.6**	26.3	28.1	32.8	38.4	41.3	40.6	42.4
Scidocs	15.8	16.2	15.8	15.4	7.7	12.2	14.3	14.9	**16.5**	15.0	15.9
Fever	75.3	71.4	78.6	78.5	56.2	66.9	66.9	70.0	75.8	69.6	**80.0**
Climate-FEVER	21.3	20.1	**23.5**	17.6	14.8	19.8	17.5	22.8	23.7	17.5	21.9
SciFact	66.5	67.5	69.3	69.3	31.8	50.7	64.4	64.3	67.7	68.6	**71.7**
BEST ON	1	0	1	3	0	0	0	0	1	0	**7**
AVERAGE	41.1	42.4	47.0	47.0	26.4	37.7	39.8	40.4	44.3	44.5	**48.7**

BEIR benchmark. Meantime, we evaluate the LexMAE on BEIR benchmark, which contains twelve datasets, where ArguAna, Scidocs, Fever, Climate-FEVER, and SciFact are semantic relatedness tasks while TREC-COVID, NFCorpus, NQ, HotpotQA, FiQA, Tóuche-2020, and DBPedia are relevance-based retrieval tasks. To apply LexMAE pre-training to this benchmark, we pre-train LexMAE on BEIR collections and then fine-tune the pre-trained encoder on the in-domain supervised data of the BEIR benchmark. Lastly, we evaluate the fine-tuned LexMAE on both the in-domain evaluation set and the twelve out-of-domain datasets, whose results are listed in Table 2. It is observed that our LexMAE achieves the best in-domain performance. When performing the zero-shot transfer on the twelve out-of-domain datasets, LexMAE achieves the best on 7 out of 12 datasets, and delivers the best overall metrics, i.e., 'BEST ON' and 'AVERAGE', verifying LexMAE's generalization.

MS-Marco Doc. Lastly, we evaluate document retrieval on MS-Marco doc in Table 3: we pre-train LexMAE on the document collection and follow the fine-tuning pipeline of (Ma et al., 2022) (w/o distillation), where our setting is firstP of 384 tokens.

Table 3: Document Retrieval on Marco Doc Dev.

Method	**M@100**	**R@100**
BERT	38.9	87.7
ICT (Lee et al., 2019)	39.6	88.2
B-PROP (Ma et al., 2021)	39.5	88.3
SEED (Lu et al., 2021)	39.6	90.2
COSTA (Ma et al., 2022)	42.2	91.9
LexMAE	**44.4**	**92.5**

4.2 Efficiency Analysis and Comparison

Since a large-scale retrieval with millions or billions of documents usually serves as an upstream module for downstream tasks or a fundamental module in commercial systems, a key metric of these retrieval systems is efficiency in terms of retrieval latency (query-per-second, QPS), index size for inverted indexing, as well as representation size per document (for non-inverted indexing). Please see our top-K sparsifying method during inference in §D for LexMAE's efficacy-efficiency trade-off.

On the one hand, as shown in Figure 2, our LexMAE achieves the best efficacy-efficiency trade-off among all dense-vector, quantized-dense, and lexicon-based methods. Compared to the previous state-of-the-art retriever, SimLM, we improve its retrieval effectiveness by 1.5% MRR@10 with $14.1\times$ acceleration. With top-L sparsifying, LexMAE can achieve competitive performance with SimLM with 100+ QPS. In addition, LexMAE shows a much better trade-off than the recent best PQ-IVF dense-vector retriever, RepCONC. Surprisingly, when only 4 tokens were kept for each passage, the performance of LexMAE (24.0% MRR@10) is still better than BM25 retrieval (18.5%).

On the other hand, as listed in Table 4, we also compare different retrieval paradigms in the aspect of their storage requirements. Note that each activated (non-zero) term in lexicon-weighed sparse vector needs 3 bytes (2 bytes for indexing and 1 byte for its quantized weight). Compared to dense-vector methods, lexicon-based methods, including our LexMAE, inherently show fewer storage requirements in terms of both index size of the collection and representation Byte per document. Meantime, compared to BM25 building its index at the word level, the learnable lexicon-weighting methods, based on the smaller vocabulary of sub-words, are more memory-friendly.

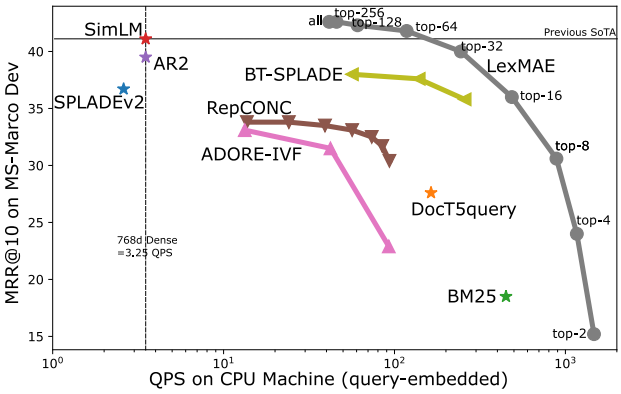

Figure 2: Retrievers w/ their MS-Marco dev MRR@10 and QPS, including dense-vector methods (i.e., SimLM, AR2), quantized-dense methods (i.e., RepCONC (Zhan et al., 2022), ADORE-IVF (Zhan et al., 2021)), and lexicon-based methods (i.e., SPLADEv2 (Formal et al., 2021a), BT-SPLADE (Lassance & Clinchant, 2022), DocT5query (Nogueira et al., 2019a), BM25, and ours).

Method	IdxSize	ReprByte	M@10
ColBERTv2	150G	17,203	39.7
AR2	27G	3,072	39.5
SimLM	27G	3,072	41.1
BM25	4.3G	Avg 210	18.5
SPLADE-max	2.0G	Avg 290	34.0
SPLADE-mask	5.4G	Avg 915	37.3
LexMAE	3.7G	-	42.6
- top-256 sparsify	3.5G	768	42.6
- top-128 sparsify	2.4G	384	42.3
- top-64 sparsify	1.4G	192	41.8
- top-32 sparsify	0.9G	96	40.0
- top-16 sparsify	0.5G	48	36.0
- top-8 sparsify	0.4G	24	30.6
- top-4 sparsify	0.3G	12	24.0
- top-2 sparsify	0.2G	6	15.2
- top-1 sparsify	0.2G	3	1.9

Table 4: Index sizes (IdxSize) of models with retrieval performance (MRR@10) on MS-Marco Dev. 'ReprByte' denotes the storage requirement for an embedded passage.

Table 5: Ensemble & hybrid retrievers. [1]An ensemble of 4 SPLADE models.

Method	M@10	R@1
LexMAE-pipeline	43.1	28.8
LexMAE-ensemble	43.1	28.8
UnifieR_{uni} (Shen et al., 2022)	40.7	26.9
Ensemble of SPLADE[1]	40.0	-
COIL-full (Gao et al., 2021a)	35.5	-
CLEAR (Gao et al., 2021b)	33.8	-

Table 6: Performance on different stages (see §A for their details) of the fine-tuning pipeline on MS-Marco Dev.

Method	BM25 Negatives		Hard Negatives		Reranker-Distilled	
	M@10	R@1k	M@10	R@1k	M@10	R@1k
coCondenser	35.7	97.8	38.2	98.4	40.2	98.3
SimLM	38.0	98.3	39.1	**98.6**	41.1	98.7
LexMAE	**39.3**	**98.3**	**40.8**	98.5	**42.6**	**98.8**

4.3 Further Analysis

Analysis of Dense-Lexicon Complement. As verified by Shen et al. (2022), the lexicon-weighting retrieval is complementary to dense-vector retrieval and a simple linear combination of them can achieve excellent performance. As shown in Table 5, we conduct an experiment to complement our LexMAE with our re-implemented state-of-the-art dense-vector retrieval method, i.e., SimLM (Wang et al., 2022). Specifically, we propose to leverage two strategies: i) *ensemble*: a combination is applied to the retrieval scores of both paradigms, resulting in significant overheads due to twice large-scale retrieval; and ii) *pipeline*: a retrieval pipeline is leveraged to avoid twice retrieval: our lexicon-weighting retrieval is to retrieve top-K documents from the collection and then our dense-vector retrieval is merely applied to the constrained candidates for dense scores. It is shown that we improve the previous state-of-the-art hybrid retrieval method by 2.4% MRR@10 on MS-Marco Dev.

Zero-shot Retrieval. To figure out if our LexMAE pre-training can learn lexicon-importance distribution, we conduct a zero-shot retrieval on MS-Marco. Specifically, instead of $\mathrm{softmax}$ normalization function in Eq.(3), we present a saturation function-based L1 norm (i.e., $\text{L1-Norm}(\log(1+\text{ReLU}(\cdot))))$ and keep the other parts unchanged. W/o fine-tuning, we apply the pre-trained LexMAE to MS-Marco retrieval task, with the sparse representation of $\log(1+\text{ReLU}(\cdot)))$. As in Figure 3, our lexicon-importance embedding by LexMAE (110M parameters) beats BM25 in terms of large-scale retrieval and is competitive with a very large model, SGPT-CE (Muennighoff, 2022) with 6.1B parameters.

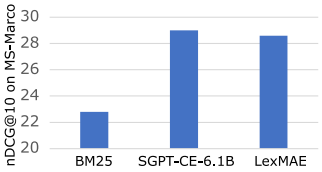

Figure 3: Zero-shot retrieval results (nDCG@10) on MS-Marco Dev.

Multi-stage Retrieval Performance. As shown in Table 6, we exhibit more details about the retrieval performance of different pre-training methods on multiple fine-tuning stages (see §A). It can be seen that our LexMAE consistently achieves the best or competitive results on all the 3 stages.

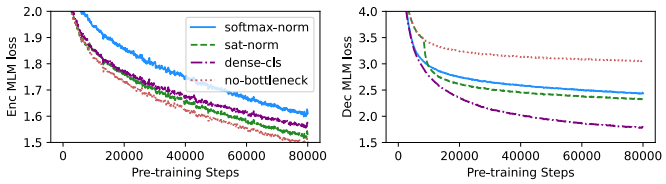

Figure 4: MLM pre-training losses (99% moving average has been applied) of LexMAE's encoder and decoder for various bottlenecks.

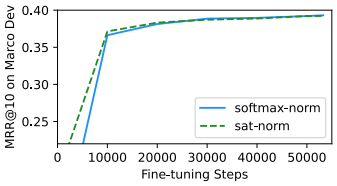

Figure 5: Fine-tuning MRR@10 curve on MS-Marco Dev.

4.4 Model Choices & Ablation Study

We conduct extensive experiments to check our model choices and their ablations from multiple aspects in Table 7. Note that, our LexMAE uses softmax-norm CBoW bottleneck, shares LM logits of encoder and bottleneck, and employs the inclusive masking strategy with 30% for the encoder and 50% for the decoder.

First, we try three other bottlenecks in Eq.(5), i.e., saturated norm for CBoW (as detailed in 'Zero-shot Retrieval'), dense bottleneck by using `[CLS]`, and no bottleneck by cutting the bottleneck off. As in Figure 4, their training loss curves show our CBoW bottlenecks do help the decoding process compared to 'no-bottleneck', but are inferior to `[CLS]` contextual dense vector. But, attributed to pretraining-finetuning consistency, CBoW bottlenecks are better in lexicon-weighting retrieval. As for the two different lexicon CBoW bottlenecks, we show their fine-tuning dev curves in Figure 5: 'sat-norm' shows its great performance in early fine-tuning stages due to the same lexicon-representing way whereas 'softmax-norm' show better later-stage fine-tuning results due to its generalization.

Table 7: First-stage (w/ BM25 negatives) fine-tuning results on MS-Marco Dev with different choices & ablations of LexMAE pre-training.

Method	**M@10**
LexMAE	39.3
Bottleneck Choices	
- Saturated Norm in CBoW (Eq.(3))	39.2
- Dense `[CLS]` (Eq.(5))	38.6
- Disable Bottleneck (Eq.(5))	38.5
Architecture Choices	
- Enable Grad to $\boldsymbol{W}^{(\text{we})}$ in Bottleneck	38.9
- Share Encoder-Decoder LM Heads	39.1
- Add extra LM for Bottleneck	39.2
- DistilBERT-Initialized	38.4
Masking Strategy ($\tilde{x}$ in Eq.(5))	
- Exclusive	39.1
- Fully Random	39.2
Masking Proportion (§3.1 & §3.3)	
- Enc (15%) v.s. Dec (15%)	38.4
- Enc (15%) v.s. Dec (30%)	38.8
- Enc (30%) v.s. Dec (30%)	39.0
- Enc (40%) v.s. Dec (60%)	39.0
- Enc (30%) v.s. Dec (100%)	39.0

Then, we make some subtle architecture changes to LexMAE: i) enabling gradient back-propagation to the word embedding matrix leads to a learning short-cut thus worse fine-tuning results; ii) both sharing the LM heads of our encoder and decoder (Eq.(1) and Eq.(5)) and adding an extra LM head specially for bottleneck LM logits (Eq.(3)) result in a minor drop, and iii) replacing BERT with DistilBERT (Sanh et al., 2019) for our initialization still outperforms a bunch of competitors.

Lastly, masking strategies other than our used 'inclusive' strategy in §3.3 do have minor effects on downstream fine-tuning. And, masking proportion of the encoder and decoder can affect the LexMAE's capability, and the negative 'affect' becomes unnoticeable when their proportion is large.

In summary, pre-training LexMAE is very stable against various changes and consistently delivers great results. And please refer to §E for more experimental comparisons.

5 Conclusion

In this work, we propose to improve the lexicon-weighing retrieval by pre-training a lexicon-bottlenecked masked autoencoder (LexMAE) which alleviates the objective mismatch between the masked language modeling encoders and relevance-oriented lexicon importance. After pre-training LexMAE on large-scale collections, we first observe great zero-shot performance. Then after fine-tuning the LexMAE on the large-scale retrieval benchmark, we obtain state-of-the-art retrieval quality with very high efficiency and also deliver state-of-the-art zero-shot transfer performance on BEIR benchmark. Further detailed analyses on the efficacy-efficiency trade-off in terms of retrieval latency and storage memory also verify the superiority of our fine-tuned LexMAE.

REFERENCES

Yinqiong Cai, Yixing Fan, Jiafeng Guo, Fei Sun, Ruqing Zhang, and Xueqi Cheng. Semantic models for the first-stage retrieval: A comprehensive review. *CoRR*, abs/2103.04831, 2021. URL https://arxiv.org/abs/2103.04831.

Wei-Cheng Chang, Felix X. Yu, Yin-Wen Chang, Yiming Yang, and Sanjiv Kumar. Pre-training tasks for embedding-based large-scale retrieval. In *8th International Conference on Learning Representations, ICLR 2020, Addis Ababa, Ethiopia, April 26-30, 2020*. OpenReview.net, 2020. URL https://openreview.net/forum?id=rkg-mA4FDr.

Nick Craswell, Bhaskar Mitra, Emine Yilmaz, Daniel Campos, and Ellen M. Voorhees. Overview of the TREC 2019 deep learning track. *CoRR*, abs/2003.07820, 2020. URL https://arxiv.org/abs/2003.07820.

Nick Craswell, Bhaskar Mitra, Emine Yilmaz, and Daniel Campos. Overview of the TREC 2020 deep learning track. *CoRR*, abs/2102.07662, 2021. URL https://arxiv.org/abs/2102.07662.

Zhuyun Dai and Jamie Callan. Context-aware sentence/passage term importance estimation for first stage retrieval. *CoRR*, abs/1910.10687, 2019. URL http://arxiv.org/abs/1910.10687.

Jacob Devlin, Ming-Wei Chang, Kenton Lee, and Kristina Toutanova. BERT: pre-training of deep bidirectional transformers for language understanding. In Jill Burstein, Christy Doran, and Thamar Solorio (eds.), *Proceedings of the 2019 Conference of the North American Chapter of the Association for Computational Linguistics: Human Language Technologies, NAACL-HLT 2019, Minneapolis, MN, USA, June 2-7, 2019, Volume 1 (Long and Short Papers)*, pp. 4171–4186. Association for Computational Linguistics, 2019. doi: 10.18653/v1/n19-1423. URL https://doi.org/10.18653/v1/n19-1423.

Thibault Formal, Carlos Lassance, Benjamin Piwowarski, and Stéphane Clinchant. SPLADE v2: Sparse lexical and expansion model for information retrieval. *CoRR*, abs/2109.10086, 2021a. URL https://arxiv.org/abs/2109.10086.

Thibault Formal, Benjamin Piwowarski, and Stéphane Clinchant. SPLADE: sparse lexical and expansion model for first stage ranking. In Fernando Diaz, Chirag Shah, Torsten Suel, Pablo Castells, Rosie Jones, and Tetsuya Sakai (eds.), *SIGIR '21: The 44th International ACM SIGIR Conference on Research and Development in Information Retrieval, Virtual Event, Canada, July 11-15, 2021*, pp. 2288–2292. ACM, 2021b. doi: 10.1145/3404835.3463098. URL https://doi.org/10.1145/3404835.3463098.

Thibault Formal, Carlos Lassance, Benjamin Piwowarski, and Stéphane Clinchant. From distillation to hard negative sampling: Making sparse neural IR models more effective. *CoRR*, abs/2205.04733, 2022. doi: 10.48550/arXiv.2205.04733. URL https://doi.org/10.48550/arXiv.2205.04733.

Luyu Gao and Jamie Callan. Condenser: a pre-training architecture for dense retrieval. In Marie-Francine Moens, Xuanjing Huang, Lucia Specia, and Scott Wen-tau Yih (eds.), *Proceedings of the 2021 Conference on Empirical Methods in Natural Language Processing, EMNLP 2021, Virtual Event / Punta Cana, Dominican Republic, 7-11 November, 2021*, pp. 981–993. Association for Computational Linguistics, 2021. doi: 10.18653/v1/2021.emnlp-main.75. URL https://doi.org/10.18653/v1/2021.emnlp-main.75.

Luyu Gao and Jamie Callan. Unsupervised corpus aware language model pre-training for dense passage retrieval. In Smaranda Muresan, Preslav Nakov, and Aline Villavicencio (eds.), *Proceedings of the 60th Annual Meeting of the Association for Computational Linguistics (Volume 1: Long Papers), ACL 2022, Dublin, Ireland, May 22-27, 2022*, pp. 2843–2853. Association for Computational Linguistics, 2022. doi: 10.18653/v1/2022.acl-long.203. URL https://doi.org/10.18653/v1/2022.acl-long.203.

Luyu Gao, Zhuyun Dai, and Jamie Callan. COIL: revisit exact lexical match in information retrieval with contextualized inverted list. In Kristina Toutanova, Anna Rumshisky, Luke Zettlemoyer, Dilek Hakkani-Tür, Iz Beltagy, Steven Bethard, Ryan Cotterell, Tanmoy Chakraborty, and Yichao Zhou (eds.), *Proceedings of the 2021 Conference of the North American Chapter of the Association for Computational Linguistics: Human Language Technologies, NAACL-HLT 2021, Online, June 6-11, 2021*, pp. 3030–3042. Association for Computational Linguistics, 2021a. doi: 10.18653/v1/2021.naacl-main.241. URL https://doi.org/10.18653/v1/2021.naacl-main.241.

Luyu Gao, Zhuyun Dai, Tongfei Chen, Zhen Fan, Benjamin Van Durme, and Jamie Callan. Complement lexical retrieval model with semantic residual embeddings. In Djoerd Hiemstra, Marie-Francine Moens, Josiane Mothe, Raffaele Perego, Martin Potthast, and Fabrizio Sebastiani (eds.), *Advances in Information Retrieval - 43rd European Conference on IR Research, ECIR 2021, Virtual Event, March 28 - April 1, 2021, Proceedings, Part I*, volume 12656 of *Lecture Notes in Computer Science*, pp. 146–160. Springer, 2021b. doi: 10.1007/978-3-030-72113-8_10. URL https://doi.org/10.1007/978-3-030-72113-8_10.

Kelvin Guu, Kenton Lee, Zora Tung, Panupong Pasupat, and Ming-Wei Chang. REALM: retrieval-augmented language model pre-training. *CoRR*, abs/2002.08909, 2020. URL https://arxiv.org/abs/2002.08909.

Kaiming He, Xinlei Chen, Saining Xie, Yanghao Li, Piotr Dollár, and Ross B. Girshick. Masked autoencoders are scalable vision learners. *CoRR*, abs/2111.06377, 2021a. URL https://arxiv.org/abs/2111.06377.

Pengcheng He, Xiaodong Liu, Jianfeng Gao, and Weizhu Chen. Deberta: decoding-enhanced bert with disentangled attention. In *9th International Conference on Learning Representations, ICLR 2021, Virtual Event, Austria, May 3-7, 2021*. OpenReview.net, 2021b. URL https://openreview.net/forum?id=XPZIaotutsD.

Sebastian Hofstätter, Sophia Althammer, Michael Schröder, Mete Sertkan, and Allan Hanbury. Improving efficient neural ranking models with cross-architecture knowledge distillation. *CoRR*, abs/2010.02666, 2020. URL https://arxiv.org/abs/2010.02666.

Sebastian Hofstätter, Sheng-Chieh Lin, Jheng-Hong Yang, Jimmy Lin, and Allan Hanbury. Efficiently teaching an effective dense retriever with balanced topic aware sampling. In Fernando Diaz, Chirag Shah, Torsten Suel, Pablo Castells, Rosie Jones, and Tetsuya Sakai (eds.), *SIGIR '21: The 44th International ACM SIGIR Conference on Research and Development in Information Retrieval, Virtual Event, Canada, July 11-15, 2021*, pp. 113–122. ACM, 2021. doi: 10.1145/3404835.3462891. URL https://doi.org/10.1145/3404835.3462891.

Vladimir Karpukhin, Barlas Oguz, Sewon Min, Patrick S. H. Lewis, Ledell Wu, Sergey Edunov, Danqi Chen, and Wen-tau Yih. Dense passage retrieval for open-domain question answering. In Bonnie Webber, Trevor Cohn, Yulan He, and Yang Liu (eds.), *Proceedings of the 2020 Conference on Empirical Methods in Natural Language Processing, EMNLP 2020, Online, November 16-20, 2020*, pp. 6769–6781. Association for Computational Linguistics, 2020. doi: 10.18653/v1/2020.emnlp-main.550. URL https://doi.org/10.18653/v1/2020.emnlp-main.550.

Omar Khattab and Matei Zaharia. Colbert: Efficient and effective passage search via contextualized late interaction over BERT. In Jimmy Huang, Yi Chang, Xueqi Cheng, Jaap Kamps, Vanessa Murdock, Ji-Rong Wen, and Yiqun Liu (eds.), *Proceedings of the 43rd International ACM SIGIR conference on research and development in Information Retrieval, SIGIR 2020, Virtual Event, China, July 25-30, 2020*, pp. 39–48. ACM, 2020. doi: 10.1145/3397271.3401075. URL https://doi.org/10.1145/3397271.3401075.

Carlos Lassance and Stéphane Clinchant. An efficiency study for SPLADE models. In Enrique Amigó, Pablo Castells, Julio Gonzalo, Ben Carterette, J. Shane Culpepper, and Gabriella Kazai (eds.), *SIGIR '22: The 45th International ACM SIGIR Conference on Research and Development in Information Retrieval, Madrid, Spain, July 11 - 15, 2022*, pp. 2220–2226. ACM, 2022. doi: 10.1145/3477495.3531833. URL https://doi.org/10.1145/3477495.3531833.

Kenton Lee, Ming-Wei Chang, and Kristina Toutanova. Latent retrieval for weakly supervised open domain question answering. In Anna Korhonen, David R. Traum, and Lluís Màrquez

(eds.), *Proceedings of the 57th Conference of the Association for Computational Linguistics, ACL 2019, Florence, Italy, July 28- August 2, 2019, Volume 1: Long Papers*, pp. 6086–6096. Association for Computational Linguistics, 2019. doi: 10.18653/v1/p19-1612. URL https://doi.org/10.18653/v1/p19-1612.

Patrick S. H. Lewis, Ethan Perez, Aleksandra Piktus, Fabio Petroni, Vladimir Karpukhin, Naman Goyal, Heinrich Küttler, Mike Lewis, Wen-tau Yih, Tim Rocktäschel, Sebastian Riedel, and Douwe Kiela. Retrieval-augmented generation for knowledge-intensive NLP tasks. In Hugo Larochelle, Marc'Aurelio Ranzato, Raia Hadsell, Maria-Florina Balcan, and Hsuan-Tien Lin (eds.), *Advances in Neural Information Processing Systems 33: Annual Conference on Neural Information Processing Systems 2020, NeurIPS 2020, December 6-12, 2020, virtual*, 2020. URL https://proceedings.neurips.cc/paper/2020/hash/6b493230205f780e1bc26945df7481e5-Abstract.html.

Sheng-Chieh Lin, Jheng-Hong Yang, and Jimmy Lin. In-batch negatives for knowledge distillation with tightly-coupled teachers for dense retrieval. In *Proceedings of the 6th Workshop on Representation Learning for NLP (RepL4NLP-2021)*, pp. 163–173, Online, August 2021. Association for Computational Linguistics. doi: 10.18653/v1/2021.repl4nlp-1.17. URL https://aclanthology.org/2021.repl4nlp-1.17.

Yinhan Liu, Myle Ott, Naman Goyal, Jingfei Du, Mandar Joshi, Danqi Chen, Omer Levy, Mike Lewis, Luke Zettlemoyer, and Veselin Stoyanov. Roberta: A robustly optimized BERT pretraining approach. *CoRR*, abs/1907.11692, 2019. URL http://arxiv.org/abs/1907.11692.

Zheng Liu and Yingxia Shao. Retromae: Pre-training retrieval-oriented transformers via masked auto-encoder. *CoRR*, abs/2205.12035, 2022. doi: 10.48550/arXiv.2205.12035. URL https://doi.org/10.48550/arXiv.2205.12035.

Shuqi Lu, Chenyan Xiong, Di He, Guolin Ke, Waleed Malik, Zhicheng Dou, Paul Bennett, Tie-Yan Liu, and Arnold Overwijk. Less is more: Pre-training a strong siamese encoder using a weak decoder. *CoRR*, abs/2102.09206, 2021. URL https://arxiv.org/abs/2102.09206.

Xinyu Ma, Jiafeng Guo, Ruqing Zhang, Yixing Fan, Yingyan Li, and Xueqi Cheng. B-PROP: bootstrapped pre-training with representative words prediction for ad-hoc retrieval. In Fernando Diaz, Chirag Shah, Torsten Suel, Pablo Castells, Rosie Jones, and Tetsuya Sakai (eds.), *SIGIR '21: The 44th International ACM SIGIR Conference on Research and Development in Information Retrieval, Virtual Event, Canada, July 11-15, 2021*, pp. 1318–1327. ACM, 2021. doi: 10.1145/3404835.3462869. URL https://doi.org/10.1145/3404835.3462869.

Xinyu Ma, Jiafeng Guo, Ruqing Zhang, Yixing Fan, and Xueqi Cheng. Pre-train a discriminative text encoder for dense retrieval via contrastive span prediction. In Enrique Amigó, Pablo Castells, Julio Gonzalo, Ben Carterette, J. Shane Culpepper, and Gabriella Kazai (eds.), *SIGIR '22: The 45th International ACM SIGIR Conference on Research and Development in Information Retrieval, Madrid, Spain, July 11 - 15, 2022*, pp. 848–858. ACM, 2022. doi: 10.1145/3477495.3531772. URL https://doi.org/10.1145/3477495.3531772.

Niklas Muennighoff. SGPT: GPT sentence embeddings for semantic search. *CoRR*, abs/2202.08904, 2022. URL https://arxiv.org/abs/2202.08904.

Tri Nguyen, Mir Rosenberg, Xia Song, Jianfeng Gao, Saurabh Tiwary, Rangan Majumder, and Li Deng. MS MARCO: A human generated machine reading comprehension dataset. In Tarek Richard Besold, Antoine Bordes, Artur S. d'Avila Garcez, and Greg Wayne (eds.), *Proceedings of the Workshop on Cognitive Computation: Integrating neural and symbolic approaches 2016 co-located with the 30th Annual Conference on Neural Information Processing Systems (NIPS 2016), Barcelona, Spain, December 9, 2016*, volume 1773 of *CEUR Workshop Proceedings*. CEUR-WS.org, 2016. URL http://ceur-ws.org/Vol-1773/CoCoNIPS_2016_paper9.pdf.

Rodrigo Nogueira, Jimmy Lin, and AI Epistemic. From doc2query to doctttttquery. *Online preprint*, 6, 2019a.

Rodrigo Nogueira, Wei Yang, Jimmy Lin, and Kyunghyun Cho. Document expansion by query prediction. *CoRR*, abs/1904.08375, 2019b. URL http://arxiv.org/abs/1904.08375.

Biswajit Paria, Chih-Kuan Yeh, Ian En-Hsu Yen, Ning Xu, Pradeep Ravikumar, and Barnabás Póczos. Minimizing flops to learn efficient sparse representations. In *8th International Conference on Learning Representations, ICLR 2020, Addis Ababa, Ethiopia, April 26-30, 2020*. OpenReview.net, 2020. URL https://openreview.net/forum?id=SygpC6Ntvr.

Yingqi Qu, Yuchen Ding, Jing Liu, Kai Liu, Ruiyang Ren, Wayne Xin Zhao, Daxiang Dong, Hua Wu, and Haifeng Wang. Rocketqa: An optimized training approach to dense passage retrieval for open-domain question answering. In Kristina Toutanova, Anna Rumshisky, Luke Zettlemoyer, Dilek Hakkani-Tür, Iz Beltagy, Steven Bethard, Ryan Cotterell, Tanmoy Chakraborty, and Yichao Zhou (eds.), *Proceedings of the 2021 Conference of the North American Chapter of the Association for Computational Linguistics: Human Language Technologies, NAACL-HLT 2021, Online, June 6-11, 2021*, pp. 5835–5847. Association for Computational Linguistics, 2021. doi: 10.18653/v1/2021.naacl-main.466. URL https://doi.org/10.18653/v1/2021.naacl-main.466.

Alec Radford, Karthik Narasimhan, Tim Salimans, and Ilya Sutskever. Improving language understanding by generative pre-training.

Colin Raffel, Noam Shazeer, Adam Roberts, Katherine Lee, Sharan Narang, Michael Matena, Yanqi Zhou, Wei Li, and Peter J. Liu. Exploring the limits of transfer learning with a unified text-to-text transformer. *J. Mach. Learn. Res.*, 21:140:1–140:67, 2020. URL http://jmlr.org/papers/v21/20-074.html.

Nils Reimers and Iryna Gurevych. Sentence-bert: Sentence embeddings using siamese bert-networks. In Kentaro Inui, Jing Jiang, Vincent Ng, and Xiaojun Wan (eds.), *Proceedings of the 2019 Conference on Empirical Methods in Natural Language Processing and the 9th International Joint Conference on Natural Language Processing, EMNLP-IJCNLP 2019, Hong Kong, China, November 3-7, 2019*, pp. 3980–3990. Association for Computational Linguistics, 2019. doi: 10.18653/v1/D19-1410. URL https://doi.org/10.18653/v1/D19-1410.

Ruiyang Ren, Shangwen Lv, Yingqi Qu, Jing Liu, Wayne Xin Zhao, Qiaoqiao She, Hua Wu, Haifeng Wang, and Ji-Rong Wen. PAIR: leveraging passage-centric similarity relation for improving dense passage retrieval. In Chengqing Zong, Fei Xia, Wenjie Li, and Roberto Navigli (eds.), *Findings of the Association for Computational Linguistics: ACL/IJCNLP 2021, Online Event, August 1-6, 2021*, volume ACL/IJCNLP 2021 of *Findings of ACL*, pp. 2173–2183. Association for Computational Linguistics, 2021a. doi: 10.18653/v1/2021.findings-acl.191. URL https://doi.org/10.18653/v1/2021.findings-acl.191.

Ruiyang Ren, Yingqi Qu, Jing Liu, Wayne Xin Zhao, Qiaoqiao She, Hua Wu, Haifeng Wang, and Ji-Rong Wen. Rocketqav2: A joint training method for dense passage retrieval and passage re-ranking. In Marie-Francine Moens, Xuanjing Huang, Lucia Specia, and Scott Wen-tau Yih (eds.), *Proceedings of the 2021 Conference on Empirical Methods in Natural Language Processing, EMNLP 2021, Virtual Event / Punta Cana, Dominican Republic, 7-11 November, 2021*, pp. 2825–2835. Association for Computational Linguistics, 2021b. doi: 10.18653/v1/2021.emnlp-main.224. URL https://doi.org/10.18653/v1/2021.emnlp-main.224.

Victor Sanh, Lysandre Debut, Julien Chaumond, and Thomas Wolf. Distilbert, a distilled version of BERT: smaller, faster, cheaper and lighter. *CoRR*, abs/1910.01108, 2019. URL http://arxiv.org/abs/1910.01108.

Keshav Santhanam, Omar Khattab, Jon Saad-Falcon, Christopher Potts, and Matei Zaharia. Colbertv2: Effective and efficient retrieval via lightweight late interaction. *CoRR*, abs/2112.01488, 2021. URL https://arxiv.org/abs/2112.01488.

Tao Shen, Xiubo Geng, Chongyang Tao, Can Xu, Kai Zhang, and Daxin Jiang. Unifier: A unified retriever for large-scale retrieval. *CoRR*, abs/2205.11194, 2022. doi: 10.48550/arXiv.2205.11194. URL https://doi.org/10.48550/arXiv.2205.11194.

Nandan Thakur, Nils Reimers, Andreas Rücklé, Abhishek Srivastava, and Iryna Gurevych. BEIR: A heterogenous benchmark for zero-shot evaluation of information retrieval models. *CoRR*, abs/2104.08663, 2021. URL https://arxiv.org/abs/2104.08663.

Ashish Vaswani, Noam Shazeer, Niki Parmar, Jakob Uszkoreit, Llion Jones, Aidan N. Gomez, Lukasz Kaiser, and Illia Polosukhin. Attention is all you need. In Isabelle Guyon, Ulrike von Luxburg, Samy Bengio, Hanna M. Wallach, Rob Fergus, S. V. N. Vishwanathan, and Roman Garnett (eds.), *Advances in Neural Information Processing Systems 30: Annual Conference on Neural Information Processing Systems 2017, December 4-9, 2017, Long Beach, CA, USA*, pp. 5998–6008, 2017. URL https://proceedings.neurips.cc/paper/2017/hash/3f5ee243547dee91fbd053c1c4a845aa-Abstract.html.

Liang Wang, Nan Yang, Xiaolong Huang, Binxing Jiao, Linjun Yang, Daxin Jiang, Rangan Majumder, and Furu Wei. Simlm: Pre-training with representation bottleneck for dense passage retrieval. *CoRR*, abs/2207.02578, 2022. doi: 10.48550/arXiv.2207.02578. URL https://doi.org/10.48550/arXiv.2207.02578.

Shitao Xiao, Zheng Liu, Weihao Han, Jianjin Zhang, Defu Lian, Yeyun Gong, Qi Chen, Fan Yang, Hao Sun, Yingxia Shao, and Xing Xie. Distill-vq: Learning retrieval oriented vector quantization by distilling knowledge from dense embeddings. In Enrique Amigó, Pablo Castells, Julio Gonzalo, Ben Carterette, J. Shane Culpepper, and Gabriella Kazai (eds.), *SIGIR '22: The 45th International ACM SIGIR Conference on Research and Development in Information Retrieval, Madrid, Spain, July 11 - 15, 2022*, pp. 1513–1523. ACM, 2022. doi: 10.1145/3477495.3531799. URL https://doi.org/10.1145/3477495.3531799.

Lee Xiong, Chenyan Xiong, Ye Li, Kwok-Fung Tang, Jialin Liu, Paul N. Bennett, Junaid Ahmed, and Arnold Overwijk. Approximate nearest neighbor negative contrastive learning for dense text retrieval. In *9th International Conference on Learning Representations, ICLR 2021, Virtual Event, Austria, May 3-7, 2021*. OpenReview.net, 2021. URL https://openreview.net/forum?id=zeFrfgyZln.

Jheng-Hong Yang, Xueguang Ma, and Jimmy Lin. Sparsifying sparse representations for passage retrieval by top-k masking. *CoRR*, abs/2112.09628, 2021. URL https://arxiv.org/abs/2112.09628.

Peilin Yang, Hui Fang, and Jimmy Lin. Anserini: Enabling the use of lucene for information retrieval research. In Noriko Kando, Tetsuya Sakai, Hideo Joho, Hang Li, Arjen P. de Vries, and Ryen W. White (eds.), *Proceedings of the 40th International ACM SIGIR Conference on Research and Development in Information Retrieval, Shinjuku, Tokyo, Japan, August 7-11, 2017*, pp. 1253–1256. ACM, 2017. doi: 10.1145/3077136.3080721. URL https://doi.org/10.1145/3077136.3080721.

Zhilin Yang, Zihang Dai, Ruslan Salakhutdinov, and William W. Cohen. Breaking the softmax bottleneck: A high-rank RNN language model. In *6th International Conference on Learning Representations, ICLR 2018, Vancouver, BC, Canada, April 30 - May 3, 2018, Conference Track Proceedings*. OpenReview.net, 2018. URL https://openreview.net/forum?id=HkwZSG-CZ.

Jingtao Zhan, Jiaxin Mao, Yiqun Liu, Jiafeng Guo, Min Zhang, and Shaoping Ma. Optimizing dense retrieval model training with hard negatives. In Fernando Diaz, Chirag Shah, Torsten Suel, Pablo Castells, Rosie Jones, and Tetsuya Sakai (eds.), *SIGIR '21: The 44th International ACM SIGIR Conference on Research and Development in Information Retrieval, Virtual Event, Canada, July 11-15, 2021*, pp. 1503–1512. ACM, 2021. doi: 10.1145/3404835.3462880. URL https://doi.org/10.1145/3404835.3462880.

Jingtao Zhan, Jiaxin Mao, Yiqun Liu, Jiafeng Guo, Min Zhang, and Shaoping Ma. Learning discrete representations via constrained clustering for effective and efficient dense retrieval. In K. Selcuk Candan, Huan Liu, Leman Akoglu, Xin Luna Dong, and Jiliang Tang (eds.), *WSDM '22: The Fifteenth ACM International Conference on Web Search and Data Mining, Virtual Event / Tempe, AZ, USA, February 21 - 25, 2022*, pp. 1328–1336. ACM, 2022. doi: 10.1145/3488560.3498443. URL https://doi.org/10.1145/3488560.3498443.

Hang Zhang, Yeyun Gong, Yelong Shen, Jiancheng Lv, Nan Duan, and Weizhu Chen. Adversarial retriever-ranker for dense text retrieval. In *International Conference on Learning Representations*, 2022. URL https://openreview.net/forum?id=MR7XubKUFB.

Xueliang Zhao, Wei Wu, Can Xu, Chongyang Tao, Dongyan Zhao, and Rui Yan. Knowledge-grounded dialogue generation with pre-trained language models. In Bonnie Webber, Trevor Cohn, Yulan He, and Yang Liu (eds.), *Proceedings of the 2020 Conference on Empirical Methods in Natural Language Processing, EMNLP 2020, Online, November 16-20, 2020*, pp. 3377–3390. Association for Computational Linguistics, 2020. doi: 10.18653/v1/2020.emnlp-main.272. URL https://doi.org/10.18653/v1/2020.emnlp-main.272.

Jiawei Zhou, Xiaoguang Li, Lifeng Shang, Lan Luo, Ke Zhan, Enrui Hu, Xinyu Zhang, Hao Jiang, Zhao Cao, Fan Yu, Xin Jiang, Qun Liu, and Lei Chen. Hyperlink-induced pre-training for passage retrieval in open-domain question answering. In Smaranda Muresan, Preslav Nakov, and Aline Villavicencio (eds.), *Proceedings of the 60th Annual Meeting of the Association for Computational Linguistics (Volume 1: Long Papers), ACL 2022, Dublin, Ireland, May 22-27, 2022*, pp. 7135–7146. Association for Computational Linguistics, 2022a. doi: 10.18653/v1/2022.acl-long.493. URL https://doi.org/10.18653/v1/2022.acl-long.493.

Yucheng Zhou, Tao Shen, Xiubo Geng, Chongyang Tao, Can Xu, Guodong Long, Binxing Jiao, and Daxin Jiang. Towards robust ranker for text retrieval. *CoRR*, abs/2206.08063, 2022b. doi: 10.48550/arXiv.2206.08063. URL https://doi.org/10.48550/arXiv.2206.08063.

A Multi-stage Retriever Fine-tuning

A.1 Fine-tuning Pipeline

To train a state-of-the-art lexicon-weighting retriever, we adapt the fine-tuning pipeline in a recent dense-vector retrieval method (Wang et al., 2022) as illustrated in Figure 6. The major difference is the source of the involved reranker for knowledge distillation into a retriever: In contrast to (Wang et al., 2022) that trains a reranker on the fly for retriever-specific reranker but suffers from high computation overheads, we propose to leverage an off-the-shelf reranker by (Zhou et al., 2022b).

Stage 1: BM25 Negatives. In the first stage, we sample negatives for each query q within top-K_1 document candidates by BM25 retrieval system, which is denoted as $\mathbb{N}^{(\text{bm25})}$. Therefore, the contrastive learning loss of stage 1 of our retriever fine-tuning is written as

$$L^{(\text{r1})} = \sum\nolimits_q -\log P(\text{d} = d_+|q, \{d_+\} \cup \mathbb{N}^{(\text{bm25})}; \theta^{(\text{enc})}) + \lambda_1 \,\text{FLOPS}\,. \tag{11}$$

Stage 2: Hard Negatives. Then, we sample the hard negatives $\mathbb{N}^{(\text{hn1})}$ for each query q within top-K_2 candidates based on the relevance scores by the retriever we obtain in stage 1, and the training loss of our stage 2 is defined as

$$L^{(\text{r2})} = \sum\nolimits_q -\log P(\text{d} = d_+|q, \{d_+\} \cup \mathbb{N}^{(\text{hn1})}; \theta^{(\text{enc})}) + \lambda_2 \,\text{FLOPS}\,. \tag{12}$$

Stage 3: Reranker-Distilled. Lastly, we further sample hard negatives $\mathbb{N}^{(\text{hn2})}$ for each query q within top-K_3 candidates by the 2nd-stage retriever. Besides the contrastive learning objective, we also distill a well-trained reranker into our stage 3 of the retriever, which is written as

$$\begin{aligned} L^{(\text{r3})} = \sum\nolimits_q & \text{KL-Div}(P(\text{d}|q, \{d_+\} \cup \mathbb{N}^{(\text{hn2})}; \theta^{(\text{enc})})||P(\text{d}|q, \{d_+\} \cup \mathbb{N}^{(\text{hn2})}; \theta^{(\text{rk})})) \\ & - \gamma \log P(\text{d} = d_+|q, \{d_+\} \cup \mathbb{N}^{(\text{hn2})}; \theta^{(\text{enc})}) + \lambda_3 \,\text{FLOPS}\,. \end{aligned} \tag{13}$$

Here, $\theta^{(\text{rk})}$ parameterizes an expensive but effective cross-encoder as the reranker for knowledge distillation, and KL divergence, $\text{KL-Div}(\cdot||\cdot)$, is used as distillation loss with $\theta^{(\text{rk})}$ frozen.

A.2 Fine-tuning Setups

We share some hyperparameters across all three stages: learning rate is set to 2×10^{-5} by following Shen et al. (2022), the number of training epochs is set to 3, model initialization is always our LexMAE, max document length is set to 144, and max query length is set to 32. Following (Wang et al., 2022), the γ in Eq.(13) is set to 0.2. In contrast to (Wang et al., 2022) using 4 GPUs for

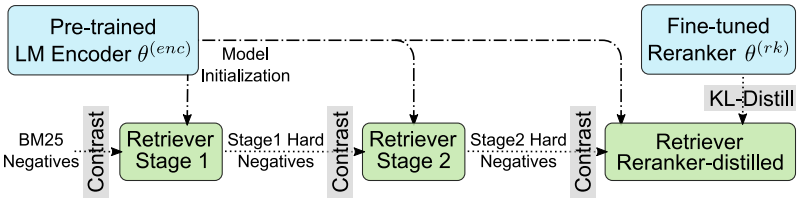

Figure 6: An illustration of the fine-tuning pipeline of our retrievers. Here, the fine-tuned reranker is directly adopted from (Zhou et al., 2022b) to avoid expensive reranker training.

fine-tuning, we limited all the fine-tuning experiments on one A100 GPU. The batch size (w.r.t the number of queries) is set to 24 with 1 positive and 15 negative documents in the fine-tuning stage 1 and 2, whereas that is set to 16 with 1 positive and 23 negative documents (to increase the number of negatives but fit one GPU memory by reducing the batch size). Another important hyperparameter is the depth (keeping how many top candidates as negatives) of negative sampling, i.e., K in Eq.(11 - 13). By following Wang et al. (2022) and Gao & Callan (2022), we keep 1000 for BM25 negatives and 200 for other negatives, i.e., $K_1 = 1000, K_2 = 200, K_3 = 200$. The only hyperparameter we have tuned is the loss weight λ in Eq.(11 - 13), i.e., $\lambda_1 \in \{0.001, 0.002, 0.004\}$ (corresponding to BM25 negatives) and $\lambda_{2/3} \in \{0.004, 0.008, 0.016\}$ (corresponding to hard negatives). Empirically, we found $\lambda_1 = 0.002, \lambda_2 = 0.008, \lambda_3 = 0.008$ achieving a great performance-efficiency trade-off. Again, we fix the random seed always to 42 in all our experiments without any tuning.

B Lexicon-Weighting Inference for Large-Scale Retrieval

In the inference phase of large-scale retrieval, there are some differences between dense-vector and lexicon-weighting retrieval methods.

As in Eq.(10), we use the dot-product between the real-valved sparse lexicon-weighting representations as a relevance metric, where 'real-valved' is a prerequisite of gradient back-propagation and end-to-end learning. However, it is inefficient and infeasible to leverage the real-valved sparse representations, especially for the open-source term-based retrieval systems, e.g., LUCENE and Anserini (Yang et al., 2017). Following Formal et al. (2021a), we adopt 'quantization' and 'term-based system' to complete our retrieval procedure. That is, to transfer the high-dimensional sparse vectors back to the corresponding lexicons and their virtual frequencies, the lexicons are first obtained by keeping the non-zero elements in a high-dim sparse vector, and each virtual frequency then is derived from a straightforward quantization (i.e., $\lfloor 100 \times \boldsymbol{v} \rfloor$).

In summary, the overall procedure of our large-scale retrieval based on a fine-tuned LexMAE is i) generating the high-dim sparse vector for each document and transferring it to lexicons and frequencies, ii) building a term-based inverted index via Anserini (Yang et al., 2017) for all documents in a collection, iii) given a test query, generating the lexicons and frequencies, in the same way, and iv) querying the built index to get top document candidates.

C Explanation of Different Recall Metrics

Regarding R@N metric, we found there are two kinds of calculating ways, and we strictly follow the official evaluation one at `https://github.com/usnistgov/trec_eval` and `https://github.com/castorini/anserini`, which is defined as

$$\text{Marco-Recall@N} = \frac{1}{|\mathbb{Q}|} \sum_{q \in \mathbb{Q}} \frac{\sum_{d_+ \in \mathbb{D}_+} \mathbf{1}_{d_+ \in \bar{\mathbb{D}}}}{\min(N, |\mathbb{D}_+|)}, \tag{14}$$

where there may be multiple positive documents $\mathbb{D}^+ \in \mathbb{D}$, $\mathbb{Q}$ denotes the test queries and $\bar{\mathbb{D}}$ denotes top-K document candidates by a retrieval system. We also call this metric *all-positive-macro* Recall@N. On the other hand, another recall calculation method following DPR (Karpukhin et al.,

Table 8: Retrieval results on MS-Marco Dev on *one-positive-enough* recall. Note that the official Recall@50 of our fine-tuned LexMAE is 88.9%.

Method	M@10	*R@50*	*R@1K*
RocketQA (Qu et al., 2021)	37.0	85.5	97.9
PAIR (Ren et al., 2021a)	37.9	86.4	98.2
RocketQAv2 (Ren et al., 2021b)	38.8	86.2	98.1
AR2 (Zhang et al., 2022)	39.5	87.8	98.6
UnifieR$_{\text{lexicon}}$ (Shen et al., 2022)	39.7	87.6	98.2
UnifieR$_{\text{dense}}$ (Shen et al., 2022)	38.8	86.3	97.8
LexMAE	**42.6**	**89.6**	**99.0**

Table 9: Comparisons of our retriever with *retrieval&rerank* pipelines.

Retriever	**Reranker**	M@10
RepBERT	RepBERT	37.7
ME-HYBRID	ME-HYBRID	39.4
RocketQA	RocketQA	40.9
RocketQAv2	RocketQAv2	41.9
LexMAE (retriever-only)		42.6

Table 10: Different pre-training objectives with its first-stage fine-tuning MRR@10 performance on MS-Marco.

	LexMAE	SimLM	Enc-Dec MLM	Condenser	MLM	Enc-Dec RTD	AutoEncoder	BERT$_{\text{base}}$
M@10	**39.3**	38.0	37.7	36.9	36.7	36.2	32.8	33.7

2020) is defined as

$$\text{DPR-Recall@N} = \frac{1}{|\mathcal{Q}|} \sum_{q \in \mathbb{Q}} \mathbf{1}_{\exists d \in \bar{\mathbb{D}} \wedge d \in \mathbb{D}^+}. \tag{15}$$

which we call *one-positive-enough* Recall@N. Therefore, The official (*all-positive-macro*) Recall@N is usually less than DPR (*one-positive-enough*) Recall@N, and the smaller N, the more obvious.

Therefore, we make the unofficial *one-positive-enough* Recall@N standalone in Table 8 for more precise comparisons. It is observed that our LexMAE is still the best retriever among its competitors.

D Specifying Lexicon Representations

Compared to dense-vector retrieval methods (Zhan et al., 2022; Xiao et al., 2022) that rely on product-quantization (PQ) and inverted file (IVF) to compromise their performance ($-3\% \sim 4\%$) for memory & time efficiency, the lexicon-weighting method with high-dimension sparse representation is intrinsically efficient for large-scale retrieval as demonstrated in §B – fully compatible with traditional term-based retrieval system, e.g., BM25 – only manipulating the term frequency and document frequency by the neural language modeling encoder.

To dive into LexMAE's efficacy-efficiency trade-off, we present a simple but effective sparsifying method – only keep top-K weighted (frequency) in the inference phase to represent the document and then build the inverted index for the sparsified documents. In contrast, Yang et al. (2021) and Lassance & Clinchant (2022) propose to sparsify the lexicon-weighing representations by controlling fine-tuning hyperparameters – leading to extra computation overheads.

E More Experiments

Comparison to Retrieval & Rerank Pipeline. Furthermore, our LexMAE retriever can outperform many state-of-the-art *retrieval & rerank* pipeline methods as in Table 9. It is noteworthy that these rerankers (a.k.a., cross-attention model or cross-encoder) are very costly as they must be applied to every query-document text concatenation, instead of query-agnostic representations from a bi-encoder.

Comparisons with Different Pre-training Objectives. As listed in Table 10, we compare our pre-training objective with a batch of other objectives by fine-tuning the pre-trained model on MS-Marco BM25 negatives. It can be seen that our LexMAE improves the previous best by 1.3% MRR@10 in MS-Marco Dev.