VARYING COEFFICIENT NEURAL NETWORK WITH FUNCTIONAL TARGETED REGULARIZATION FOR ESTIMATING CONTINUOUS TREATMENT EFFECTS

Anonymous authors
Paper under double-blind review

ABSTRACT

With the rising abundance of observational data with continuous treatments, we investigate the problem of estimating average dose-response curve (ADRF). Available parametric methods are limited in model space, while previous attempts in leveraging neural network to enhance model expressiveness rely on partitioning continuous treatment into blocks and using separate heads for each block, which, however, produce discontinuous ADRF in practice. Thus, the question of how to adapt the structure and training of neural network to estimate ADRF is still open. This paper provides an answer to this question by making two contributions. First, we propose a novel varying coefficient neural network (VCNet) which improves model expressiveness while preserving continuity of the estimated ADRF. Second, in order to improve finite sample performance, we generalize targeted regularization to obtain a doubly robust estimator of the whole ADRF curve, whereas its predecessor is only for estimating a scalar quantity.

1 INTRODUCTION

Continuous treatments arise in various fields, including healthcare, public policy and economics. With the widespread accumulation of observational data, estimating the average dose-response function (ADRF) while correcting for confounders becomes an important problem (Hirano & Imbens, 2004; Imai & Van Dyk, 2004; Kennedy et al., 2017; Fong et al., 2018).

In general, two challenges arise in estimating treatment effects (Kennedy et al., 2017). The first is the flexibility of causal relationship. Parametric assumptions limit the model space, and can lead to significant bias under model misspecification. The second challenge is properly correcting for high-dimensional confounders under observational studies (Fong et al., 2018).

The Universal Approximation Theorem (Csáji et al., 2001) shows that feed-forwrd neural network can approximate any continuous function under mild assumptions. And neural network has been successfully applied for dealing with high-dimensional input (Masci et al., 2011; Johansson et al., 2016). Thus, recent work (Johansson et al., 2016; Alaa & van der Schaar, 2017; Shalit et al., 2017; Schwab et al., 2019; Farrell et al., 2018; Shi et al., 2019) utilizes feed forward neural network in order to deal with the two challenges in causal inference. However, most of their network structure are specifically designed for binary treatment and generalizing to treatment taking value in a continuum is difficult. For example, Shalit et al. (2017); Louizos et al. (2017); Schwab et al. (2019); Shi et al. (2019) use separate heads for the two treatment options and this structure is not directly applicable for continuous treatment. A modification called DRNet (Schwab et al., 2019) partitions continuous treatment into blocks and trains separate head for each block (Figure 2). This structure is not compatible to basic properties of ADRF like continuity (Prichard & Gillam, 1971; Schneider et al., 1993; Threlfall & English, 1999). In practice, it yields discontinuous ADRF (Figure 1). These problems come from their way of dealing with treatment. Intuitively, the role of treatment and covariates in the network structure should be different, and incorporating treatment information should not destroy the continuity of ADRF. Motivated by varying coefficient model (Hastie & Tibshirani (1993), Fan et al. (1999), Chiang et al. (2001)), one can think of treatment as a parameter that affects the relationship between response and covariates. Upon this observation, our first contribution is to

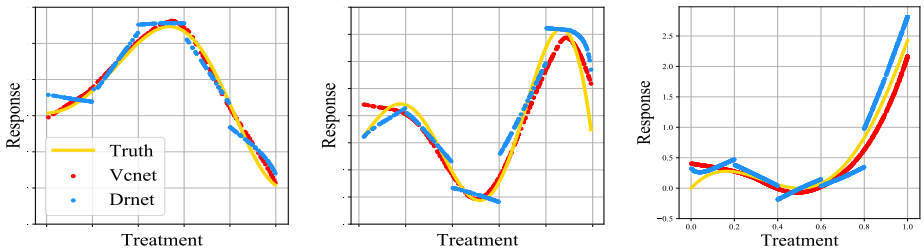

Figure 1: Estimated ADRF on testing data from a typical run of VCNet and DRNet. From left to right panels are on simulated data, IHDP and News. Both methods are well optimized.

propose a novel Varying Coefficient Network (VCNet), which allows weights of the network to be dependent on treatment information. VCNet automatically produces continuous ADRF (Figure 1).

The second contribution of this paper is to generalize targeted regularization to obtain a doubly robust estimator of the whole ADRF curve, which significantly improves finite sample performance. Targeted regularization was previously used for estimating a scalar quantity (Shi et al., 2019) and it associates an extra perturbation parameter to the scalar. While adapting to a finite-dimensional vector is straightforward, generalization to a curve is far less straightforward. Difficulties arise from the fact that we cannot regularize ADRF at each treatment level independently because the number of possible levels is infinite and thus, the model complexity cannot be controlled with the introduction of infinite extra perturbations parameters. Utilizing the continuity (and smoothness) of ADRF (Schneider et al., 1993; Threlfall & English, 1999), we introduce smoothing to control model complexity. Its model size increases in a specific manner to balance model complexity and regularization strength. Moreover, the original targeted regularization in Shi et al. (2019) is not guaranteed to obtain a doubly robust estimator. By allowing regularization strength to depend on sample size, we obtain a consistent and doubly robust estimator under mild assumptions. Noticing the connection between targeted regularization and TMLE (Van Der Laan & Rubin, 2006), a by-product of this work is that we give the first (to the best of our knowledge) generalization of TMLE to estimating a function. We do experiments on both synthetic and real datasets, and find that VCNet consistently achieves the state-of-the-art.

Notation We denote Dirac delta function as $\delta(\cdot)$. We use $\mathbb{E}$ to denote expectation. Denote $\mathbb{P}$ as the probability measure and we write $\mathbb{P}(f) = \int f(z) d\mathbb{P}(z)$. Similarly we denote $\mathbb{P}_n$ as the empirical measure and we write $\mathbb{P}_n(f) = \int f(z) d\mathbb{P}_n(z)$. We denote $\lceil n \rceil$ as the least integer greater than or equal to n, and we denote $\lfloor n \rfloor$ as the greatest integer less than or equal to n. We use τ to denote Rademacher random variables. We denote Rademacher complexity of a function class $\mathcal{F} : \mathcal{X} \to \mathbb{R}$ as $\text{Rad}_n(\mathcal{F}) = \mathbb{E}\left(\sup_{f \in \mathcal{F}} \left|\frac{1}{n}\sum_{i=1}^n \tau_i f(X_i)\right|\right)$. Given two functions $f_1, f_2 : \mathcal{X} \to \mathbb{R}$, we define $\|f_1 - f_2\|_\infty = \sup_{x \in \mathcal{X}} |f_1(x) - f_2(x)|$ and $\|f_1 - f_2\|_{L^2} = \left(\int_{x \in \mathcal{X}} (f_1(x) - f_2(x))^2 \, dx\right)^{1/2}$. For a function class $\mathcal{F}$, we define $\|\mathcal{F}\|_\infty = \sup_{f \in \mathcal{F}} \|f\|_\infty$. We denote stochastic boundedness with $\mathcal{O}_p$ and convergence in probability with o_p. Given two random variable X_1 and X_2, $X_1 \perp X_2$ denotes X_1 and X_2 are independent.

2 Problem Statement and Background

Suppose we observe an i.i.d sample $\{(y_i, \boldsymbol{x}_i, t_i)\}_{i=1}^n$ where $(y_i, \boldsymbol{x}_i, t_i)$ is a realization of random vector $(Y, \boldsymbol{X}, T)$ with support $(\mathcal{Y} \times \mathcal{X} \times \mathcal{T})$. Here $\boldsymbol{X}$ is a vector of covariates, T is a continuous treatment, and $Y \in \mathcal{Y}$ is the outcome. Without loss of generality, we assume $\mathcal{T} = [0, 1]$. We want to estimate the Average Dose Response Function (ADRF)

$$\psi(t) := \mathbb{E}(Y \mid \text{do}(T = t)),$$

which is the potential expected outcome that would have been observed under treatment level t. Suppose the conditional density of T given $\boldsymbol{X}$ is $\pi(T \mid \boldsymbol{X})$. Throughout this paper, we make the following assumptions:

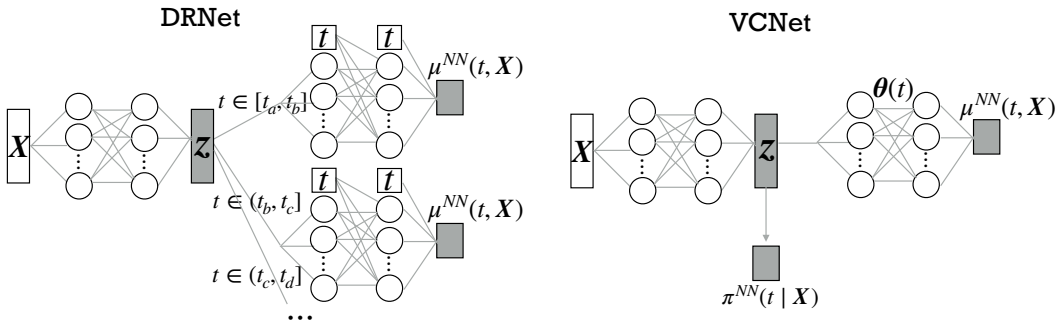

Figure 2: Comparison of network structure between DRNet and VCNet.

Assumption 1. *(a) $\pi(t \mid \boldsymbol{x}) \geq c$ for all $\boldsymbol{x} \in \mathcal{X}$ and $t \in \mathcal{T}$ for some $c > 0$. (b) The measured covariate $\boldsymbol{X}$ block all backdoor path of the treatment and outcome.*

Remark 1. *Assumption (a) implies that treatment is assigned in a way that every subject has some chance of receiving treatment level regardless of covariates, which is an standard assumption to establish doubly robust estimator. Assumption (b) implies that the casual effect is identifiable, i.e., can be estimated using observational data.*

3 VCNet: Varying Coefficient Network Structure

Under Assumption 1, we have

$$\psi(t) = \mathbb{E}\left[\mathbb{E}(Y \mid \boldsymbol{X}, T = t)\right]$$

Thus, a naive estimator is to obtain an estimator $\hat{\mu}$ of μ, and use $\hat{\psi}(t) = \frac{1}{n}\sum_{i=1}^{n} \hat{\mu}(t, \boldsymbol{x}_i)$. Here $\mu(t, \boldsymbol{x}) := \mathbb{E}(Y \mid \boldsymbol{X} = \boldsymbol{x}, T = t)$ and $\hat{\mu}$ is its estimator. Following Shi et al. (2019), we utilize the sufficiency of the generalized propensity score $\pi(t \mid \boldsymbol{X})$ for estimating ψ (Hirano & Imbens, 2004):

$$\psi(t) = \mathbb{E}\left[\mathbb{E}(Y \mid \pi(t \mid \boldsymbol{X}), T = t)\right]$$

It indicates that learning $\pi(t \mid \boldsymbol{X})$ helps the removal of noise and distillation of useful information in $\boldsymbol{X}$ for estimating ψ. Similar to Shi et al. (2019), we add a separate head for estimating $\pi(t \mid \boldsymbol{X})$, and use the feature $\boldsymbol{z}$ extracted by it for downstream estimation of $\mu(t, \boldsymbol{x})$ (see Figure 2). Our contribution here is to propose the varying coefficient structure of the prediction head for $\mu(t, \boldsymbol{x})$, which addresses difficulties confronting continuous treatment as discussed in the following paragraph.

3.1 The Varying Coefficient Prediction Head

Our aim is to predict $\mu(t, \boldsymbol{x}) = \mathbb{E}(Y \mid T = t, \boldsymbol{X} = \boldsymbol{x})$. A naive method is to train a neural network which takes $(t, \boldsymbol{x})$ as input in the first layer and output $\mu(t, \boldsymbol{x})$ in the last layer. However, the role of treatment t is different from that of $\boldsymbol{x}$ and the influence of t might be lost in the high-dimensional hidden features (Shalit et al., 2017). Aware of this problem, previous work (Schwab et al., 2019) divides the range of treatment into blocks, and then use separate prediction heads for each block (see Figure 2). To further attenuate the influence of treatment t, Schwab et al. (2019) appends t to each hidden layer. One problem of this structure is that it destroys the continuity of μ (Meretoja & Wirtavuori, 1989; Desquilbet & Mariotti, 2010) by using different prediction heads for it. In practice, DRNet indeed produces discontinuous curve (Figure 1).

We propose a varying coefficient neural network (VCNet), which simultaneously emphasizes the influence of treatment while utilizing and preserving the continuity of ADRF. In VCNet, the prediction head for μ is defined as

$$\mu^{\mathrm{NN}}(t, \boldsymbol{x}) = f_{\boldsymbol{\theta}(t)}(\boldsymbol{z}),$$

where input $\boldsymbol{z}$ is the feature extracted by the conditional density estimator, and $f_{\boldsymbol{\theta}(t)}$ is a (deep) neural network with parameter $\boldsymbol{\theta}(t)$, which is a nonlinear function depending on the treatment level t. For example, if f is an one-hidden-layer ReLU network, we have $f_{\boldsymbol{\theta}(t)} = \sum_i a_i(t)\mathrm{ReLU}(\boldsymbol{b}_i(t)^\top \boldsymbol{z})$. We

use splines to model $\boldsymbol{\theta}(t)$. Suppose that $\boldsymbol{\theta}(t) = [\theta_1(t), ..., \theta_{d_{\boldsymbol{\theta}}}(t)] \in \mathbb{R}^{d_{\boldsymbol{\theta}}}$, where $d_{\boldsymbol{\theta}}$ is the dimension of $\boldsymbol{\theta}$. We have

$$\theta_i(t) = \sum_{l=1}^{L} a_{i,\ell} \varphi_\ell^{\text{NN}}(t),$$

where $\{\varphi_l^{\text{NN}}\}_{\ell=1}^{L}$ are the spline basis and $a_{i,\ell}$'s are the coefficients. Thus, we have

$$\boldsymbol{\theta}(t) = \mathbf{A}\boldsymbol{\Phi}(t) \quad \text{where} \quad \mathbf{A} = \begin{bmatrix} a_{1,1} & \cdots & a_{1,L} \\ \vdots & \ddots & \vdots \\ a_{d_{\boldsymbol{\theta}},1} & \cdots & a_{d_{\boldsymbol{\theta}},L} \end{bmatrix} \quad \text{and} \quad \boldsymbol{\Phi}(t) = \left[\varphi_1^{\text{NN}}(t), \cdots, \varphi_L^{\text{NN}}(t)\right]^T.$$

It is worth mentioning that by choosing spline basis of the form $(t - t_0)_+$ with different offset t_0, we recover the structure in Schwab et al. (2019), which has a separate prediction head for each block. It indicates that DRNet can also be viewed as a special case of VCNet (under a suboptimal choice of basis functions).

3.2 Conditional Density Estimator

Recall that the input feature $\boldsymbol{z}$ to μ^{NN} is extracted by the conditional density estimator for $\pi(t \mid \boldsymbol{x})$. Here we propose a simple network to estimate the conditional density, which is a direct generalization of the conditional probability estimating head in Shi et al. (2019). Notice that $t \in [0, 1]$ and the conditional density $\pi(t \mid \boldsymbol{x})$ is continuous with respect to treatment t for any given $\boldsymbol{x}$. A continuous function can be effectively approximated by piecewise linear functions. Thus, we divide $[0, 1]$ equally into B grids, estimate the conditional density $\pi(\cdot \mid \boldsymbol{x})$ on the $(B + 1)$ grid points, and the conditional density for other t's are calculated via linear interpolation. To be more specific, we define the network $\pi_{\text{grid}}^{\text{NN}}$ as

$$\pi_{\text{grid}}^{\text{NN}}(\boldsymbol{x}) = \text{softmax}(\boldsymbol{\omega}_2 \boldsymbol{z}) \in \mathbb{R}^{B+1}, \quad \text{where} \quad \boldsymbol{z} = f_{\boldsymbol{\omega}_1}(\boldsymbol{x})$$

Here $\boldsymbol{z} \in \mathbb{R}^h$ is the hidden feature extracted by the network, $\boldsymbol{\omega}_1$ is the parameter for the nonlinear mapping $f_{\boldsymbol{\omega}_1}$, $\boldsymbol{\omega}_2 \in \mathbb{R}^{(B+1)\times h}$, $\pi_{\text{grid}}^{\text{NN}}(\boldsymbol{x}) = [\pi_{\text{grid}}^{0,\text{NN}}(\boldsymbol{x}), ..., \pi_{\text{grid}}^{B,\text{NN}}(\boldsymbol{x})]$ and $\pi_{\text{grid}}^{i,\text{NN}}(\boldsymbol{x})$ is the estimated conditional density of T given $\boldsymbol{X} = \boldsymbol{x}$ at $T = i/B$. This structure is analogous to a classification network by removing the last layer which outputs the class with highest softmax score. Estimation of conditional density at other T's are obtained via linear interpolation:

$$\pi^{\text{NN}}(t \mid \boldsymbol{x}) = \pi_{\text{grid}}^{t_1,\text{NN}}(\boldsymbol{x}) + B\left(\pi_{\text{grid}}^{t_2,\text{NN}}(\boldsymbol{x}) - \pi_{\text{grid}}^{t_1,\text{NN}}(\boldsymbol{x})\right)(t - t_1), \quad \text{where} \quad t_1 = \lfloor Bt \rfloor,\ t_2 = \lceil Bt \rceil$$

Notice that this linear interpolation automatically yields a valid continuous density. i.e., $\pi^{\text{NN}}(t \mid \boldsymbol{x}) \geq 0$, $\forall t, \boldsymbol{x}$ and $\int_{t=0}^{1} \pi^{\text{NN}}(t \mid \boldsymbol{x}) dt = 1$, $\forall \boldsymbol{x}$.

There are other options to estimate the conditional density. Popular methods include the Mixture Density Network (Bishop (1994)), the Kernel Mixture Network (Ambrogioni et al. (2017)) and normalizing flows (Rezende & Mohamed (2015), Dinh et al. (2016), Trippe & Turner (2018)). Here treatments are bounded, and thus Gaussian mixtures are not applicable. And linear interpolation can be replaced by kernel smoothing, which is more computationally intensive due to the calculation of normalizing constant. Other techniques including smoothness regularization and data normalization (Rothfuss et al. (2019)) can be implemented to further enhance the performance. However, density estimation is not the main focus of this paper. Thus, for simplicity, in all experiments we use the aforementioned method without other techniques and it works quite well on datasets we tried.

3.3 Training

We train π^{NN} and μ^{NN} simultaneously by minimizing the following loss:

$$\mathcal{L}[\mu^{\text{NN}}, \pi^{\text{NN}}] = \frac{1}{n}\sum_{i=1}^{n}\left(y_i - \mu^{\text{NN}}(t_i, \boldsymbol{x}_i)\right)^2 - \frac{\alpha}{n}\sum_{i=1}^{n}\log(\pi^{\text{NN}}(t_i \mid \boldsymbol{x}_i)) \tag{1}$$

The goal for training is to accurately predict $\mu(t, \boldsymbol{x})$ and $\pi(t \mid \boldsymbol{x})$. In loss (1), the first term measures the prediction loss from μ^{NN}. The second term measures the loss from π^{NN} and is negative log-likelihood. And α controls the relative weights of the two losses.

Denote $\hat{\mu}$, $\hat{\pi}$ as the optimal solution of the above empirical risk minimization problem (1). One can estimate $\psi(\cdot)$ by $\hat{\psi}(\cdot) = \frac{1}{n}\sum_{i=1}^{n}\hat{\mu}(\cdot, \boldsymbol{x}_i)$. The correctness of the above naive estimator relies on whether the truth μ are in the function space defined by the neural network model. However, we can plug $\hat{\mu}$ and $\hat{\pi}$ into the non-parametric estimating equation to obtain a doubly robust estimator of $\psi(t)$. In this way, we are able to produce an (asymptotically) correct estimator if any one of μ and π is in the model space. The next section discusses challenges in obtaining such a doubly robust estimator and provides our solution.

4 Functional Targeted Regularization

In this section we improve upon the previous method by utilizing semiparametric theory on doubly robust estimators. Doubly robust estimators are built upon $\hat{\pi}(t \mid \boldsymbol{x})$ and $\hat{\mu}(t, \boldsymbol{x})$, and it yields consistent estimator for ψ even if one of them is inconsistent. When both $\hat{\pi}(t \mid \boldsymbol{x})$ and $\hat{\mu}(t, \boldsymbol{x})$ are consistent, a doubly robust estimator obtains faster rate of convergence. Here our task is to estimate the whole ADRF curve, which comes with additional difficulties. First, we need to find a doubly robust estimator of $\psi(t_0)$ for any $t_0 \in [0, 1]$.

4.1 Doubly Robust Estimator

Before we proceed, we define the following quantity.

$$\zeta_{t_0}(Y, \boldsymbol{X}, T, \pi, \mu, \psi) = q_{t_0}(Y, \boldsymbol{X}, T, \mu, \pi) + \mu(t_0, \boldsymbol{X}) - \psi(t_0)$$
$$\text{where } \; q_{t_0}(Y, \boldsymbol{X}, T, \mu, \pi) = \delta(T - t_0)\frac{Y - \mu(T, \boldsymbol{X})}{\pi(T \mid \boldsymbol{X})}$$

The following theorem serves as the basis for our subsequent estimators:

Theorem 1. *Under assumption 1 and suppose that $\hat{\pi}(t \mid \boldsymbol{x}) \geq c > 0$ for all $\boldsymbol{x} \in \mathcal{X}$ and $t \in \mathcal{T}$. For any $t_0 \in \mathcal{T}$, ζ_{t_0} is the efficient influence function for $\psi(t_0)$. And ζ_{t_0} is doubly robust in the sense that*

$$\mathbb{P}\zeta_{t_0}(Y, \boldsymbol{X}, T, \widehat{\pi}, \widehat{\mu}, \psi) = 0$$

if either $\widehat{\pi} = \pi$ or $\widehat{\mu} = \mu$. Further, if $\|\hat{\pi} - \pi\|_\infty = \mathcal{O}_p(r_1(n))$ and $\|\hat{\mu} - \mu\|_\infty = \mathcal{O}_p(r_2(n))$, we have

$$\sup_{t_0 \in \mathcal{T}} \left|\mathbb{P}\left(q_{t_0}(Y, \boldsymbol{X}, T, \hat{\mu}, \hat{\pi}) + \hat{\mu}(t_0, \boldsymbol{X})\right) - \psi(t_0)\right| = \mathcal{O}_p(r_1(n) r_2(n)).$$

Theorem 1 shows that for any $t_0 \in \mathcal{T}$, $\mathbb{P}\left(q_{t_0}(Y, \boldsymbol{X}, T, \hat{\mu}, \hat{\pi}) + \hat{\mu}(t_0, \boldsymbol{X})\right) - \psi(t_0)$ is a doubly robust estimator for $\psi(t_0)$. Under some mild assumptions, one way to obtain a doubly robust estimator of ψ is to utilize the two-stage procedure from Kennedy et al. (2017) by regressing

$$\frac{Y - \hat{\mu}(T, \boldsymbol{X})}{\hat{\pi}(T \mid \boldsymbol{X})} \int_{\mathcal{X}} \hat{\pi}(T \mid \boldsymbol{x}) d\mathbb{P}_n(\boldsymbol{x}) + \hat{\mu}(T, \boldsymbol{X}) \tag{2}$$

on T using any nonparametric regression methods like kernel regression or spline regression.

4.2 Targeted Regularization for Inferring a Finite Dimensional Quantity

However, as discussed in Shi et al. (2019), when estimating the term $\mathbb{P}\left(q_{t_0}(Y, \boldsymbol{X}, T, \hat{\mu}, \hat{\pi})\right)$, the $\hat{\pi}(T \mid \boldsymbol{X})$ in the denominator might make the finite sample estimator unstable, especially in cases where Assumption 1(a) is nearly violated. Targeted regularization is proposed by Shi et al. (2019) to solve this issue. The key intuition of targeted regularization is to learn $\hat{\mu}$ and $\hat{\pi}$ such that $\mathbb{P}\left(q_{t_0}(Y, \boldsymbol{X}, T, \hat{\mu}, \hat{\pi})\right) \approx 0$ and thus the estimation of this term is no more needed. In the binary treatment case where $\mathcal{T} = \{0, 1\}$, if we want to estimate $\psi(1)$, which is a single quantity, targeted regularization simultaneously optimizes over μ^{NN}, π^{NN} and an extra scalar perturbation parameter ϵ using the following loss

$$\mathcal{L}_{\text{TR}}[\mu^{\text{NN}}, \pi^{\text{NN}}, \epsilon] = \mathcal{L}[\mu^{\text{NN}}, \pi^{\text{NN}}] + \beta \mathcal{R}_{\text{TR}}[\mu^{\text{NN}}, \pi^{\text{NN}}, \epsilon], \tag{3}$$
$$\text{where } \; \mathcal{R}_{\text{TR}}[\mu^{\text{NN}}, \pi^{\text{NN}}, \epsilon] = \frac{1}{n}\sum_{i=1}^{n}\left(y_i - \mu^{\text{NN}}(t_i, \boldsymbol{x}_i) - \epsilon \frac{t_i}{\pi^{\text{NN}}(1 \mid \boldsymbol{x}_i)}\right)^2$$

Here $\mathcal{L}[\mu^{\text{NN}}, \pi^{\text{NN}}]$ is defined at (1). Assume the complexity of the function space of μ^{NN} and π^{NN} is finite and since the complexity of the function space of the introduced perturbation ϵ is also finite, we have

$$\mathbb{P}\left[q_1\left(Y, \boldsymbol{X}, T, \hat{\mu}_{\text{TR}}, \hat{\pi}\right)\right] = \mathbb{P}\left[q_1\left(Y, \boldsymbol{X}, T, \hat{\mu}_{\text{TR}}, \hat{\pi}\right)\right] - \frac{1}{2}\frac{\partial}{\partial \epsilon}\mathcal{R}_{\text{TR}}[\hat{\mu}, \hat{\pi}, \hat{\epsilon}] = o_p(1),$$

where $\hat{\mu}_{\text{TR}}(t, \boldsymbol{x}) := \hat{\mu}(t, \boldsymbol{x}) + \hat{\epsilon}\frac{t}{\hat{\pi}(t|\boldsymbol{x})}$ and $(\hat{\mu}, \hat{\pi}, \hat{\epsilon})$ is the minimizer of (3). Notice that the first equality holds because at the convergence of the optimization, $\frac{\partial}{\partial \epsilon}\mathcal{R}_{\text{TR}}[\hat{\mu}, \hat{\pi}, \hat{\epsilon}] = 0$. And the second equality is by uniform concentration inequality. This implies that $\frac{1}{n}\sum_{i=1}^{n}\hat{\mu}_{\text{TR}}(1, \boldsymbol{x})$ is a doubly robust estimator for $\psi(1)$ and for this estimator, no conditional density estimator presents at denominator and thus it has more stable finite sample performance.

4.3 Functional Targeted Regularization for Inferring the Whole ADRF

Notice that in loss (3), the scalar ϵ is associated with a scalar quantity for inference. One can generalize targeted regularization to estimating a d dimensional vector by using d separate ϵ's (see Theorem 3 in the Appendix). Generalizing to a curve, however, is more challenging. We need to optimize over a function $\epsilon : \mathcal{T} \to \mathbb{R}$ where $\epsilon(\cdot)$ is the perturbation associated with $\psi(\cdot)$. Optimizing over the function space of all mappings from $\mathcal{T}$ to $\mathbb{R}$ is not feasible in practice, and its high complexity will lead to overfitting.

Our solution is to utilize the smoothness of μ and π (Prichard & Gillam, 1971; Schneider et al., 1993; Threlfall & English, 1999), which allows us to use splines $\{\varphi_k\}_{k=1}^{K_n}$ with K_n basis functions to approximate $\epsilon(\cdot)$. Here the subscript n in K_n denotes that the number of basis functions might change with the sample size n. Define $\epsilon_n(\cdot) = \sum_{k=1}^{K_n}\alpha_k\varphi_k(\cdot)$. We give the following loss with Functional Targeted Regularization (FTR).

$$\mathcal{L}_{\text{FTR}}[\mu^{\text{NN}}, \pi^{\text{NN}}, \epsilon_n] = \mathcal{L}[\mu^{\text{NN}}, \pi^{\text{NN}}] + \beta_n\mathcal{R}_{\text{FTR}}[\mu^{\text{NN}}, \pi^{\text{NN}}, \epsilon_n] \tag{4}$$

$$\text{where } \mathcal{R}_{\text{FTR}}[\mu^{\text{NN}}, \pi^{\text{NN}}, \epsilon_n] = \frac{1}{n}\sum_{i=1}^{n}\left(y_i - \mu^{\text{NN}}(t_i, \boldsymbol{x}_i) - \epsilon_n/\pi^{\text{NN}}(t_i \mid \boldsymbol{x}_i)\right)^2.$$

Here $\mathcal{R}_{\text{FTR}}$ denotes the FTR term and $\beta_n \to 0$ when $n \to \infty$.

Remark 2 (**On** β_n)**.** *The Targeted regularization proposed by Shi et al. (2019) uses a* fixed β*. However, using fixed β might make the estimator constructed by Targeted regularization no more consistent when μ^{NN} is miss-specified, which makes the estimator no more doubly robust. To overcome this issue, we make a slight change on β by allowing β depends on n. Specifically, we find that once $\beta_n = o(1)$, we are able to make sure Targeted regularization gives doubly robust estimator. See discussion at Remark 4 and Appendix A.1 for more details.*

Demonstrating the asymptotic correctness of FTR is more challenging than analyzing traditional targeted regularization. One reason is that we no more have the property that $\frac{\partial}{\partial \epsilon}\mathcal{R}_{\text{TR}}[\hat{\mu}, \hat{\pi}, \hat{\epsilon}] = 0$ in targeted regularization. We establish convergence rate for our estimator using loss (4) in Theorem 2.

Before we proceed, let us pause a bit and introduce some definitions, which will be used in the main theorem. Denote $\hat{\mu}$, $\hat{\pi}$ and $\hat{\epsilon}_n$ as the minimizer of (4). We use $\bar{\pi}$ and $\bar{\mu}$ to denote fixed functions to which $\hat{\pi}$ and $\hat{\mu}$ converge in the sense that $\|\hat{\pi} - \bar{\pi}\|_\infty = o_p(1)$ and $\|\hat{\mu} - \bar{\mu}\|_\infty = o_p(1)$. We define $g_t : \mathcal{X} \to \mathbb{R}, \boldsymbol{x} \to \mu^{\text{NN}}(\boldsymbol{x}, t)$. We denote $\mathcal{G}, \mathcal{Q}, \mathcal{U}$ as the function space in which g_t, μ^{NN}, π^{NN} lies. We denote $\mathcal{B}_{K_n}$ as the closed linear span of basis $\boldsymbol{\varphi}^{K_n} = \{\varphi_k\}_{k=1}^{K_n}$.

The key intuition of the asymptotic correctness of FTR is that: once π^{NN} and π are uniformly upper/lower bounded and some other weak regularization conditions hold, we can show that $\|\hat{\epsilon}_n(\cdot) - \epsilon^*(\cdot)\|_{L^2} = o_p(1)$ where $\epsilon^*(\cdot) := \mathbb{E}\left[(Y - \bar{\mu})/\bar{\pi} \mid T = \cdot\right]/\mathbb{E}\left[\bar{\pi}^{-2} \mid T = \cdot\right]$. And thus letting $\hat{\mu}_{\text{FTR}} := \hat{\mu} + \hat{\epsilon}_n/\hat{\pi}$, we have

$$\begin{aligned}\mathbb{P}\left[q_{t_0}\left(Y, \boldsymbol{X}, T, \hat{\mu}_{\text{FTR}}, \hat{\pi}\right)\right] &= \mathbb{P}\left(\left(Y - \hat{\mu}_{\text{FTR}}\right)/\hat{\pi} \mid T = t_0\right)\pi(t_0) \\ &\approx \left[\mathbb{E}\left(\left(Y - \bar{\mu} - \epsilon^*/\bar{\pi}\right)/\bar{\pi} \mid T = t_0\right)\right]\pi(t_0) = 0.\end{aligned}$$

Theorem 2. *In addition to Assumption 1, suppose the following assumptions hold:*

(1) There exist constants $0 < c < \infty$ s.t., for any $t \in \mathcal{T} = [0, 1]$ and $\boldsymbol{x} \in \mathcal{X}$, for any π^{NN} in its model space, $1/c \leq \pi^{NN}(t \mid \boldsymbol{x}) \leq c$, $1/c \leq \pi(t \mid \boldsymbol{x}) \leq c$, $\|\mathcal{Q}\|_\infty \leq c$ and $\|\mu\|_\infty \leq c$.

(2) $Y = \mu(\boldsymbol{X}, T) + V$ *where* $\mathbb{E}V = 0$, $V \perp \boldsymbol{X}, T$, *and* V *follows sub-Gaussian distribution.*

(3) $\mathcal{B}_{K_n}$ *equals the closed linear span of B-spline with equally spaced knots, fixed degree, and dimension* $K_n \asymp n^{1/6}$.

(4) Either $\bar{\pi} = \pi$ *or* $\bar{\mu} = \mu$.

(5) $Rad_n(\mathcal{G}) = \mathcal{O}\left(n^{-1/2}\right)$, $Rad_n(\mathcal{Q}) = \mathcal{O}\left(n^{-1/2}\right)$ *and* $Rad_n(\mathcal{U}) = \mathcal{O}\left(n^{-1/2}\right)$.

(6) π, μ, π^{NN} *and* μ^{NN} *have bounded second derivatives for any* $\pi^{NN} \in \mathcal{Q}$ *and* $\mu^{NN} \in \mathcal{U}$.

Let $\widehat{\psi}(\cdot) := \frac{1}{n}\sum_{i=1}^{n}\left(\hat{\mu}(\boldsymbol{x}_i, \cdot) + \frac{\hat{\epsilon}_n(\cdot)}{\hat{\pi}(\cdot|\boldsymbol{x}_i)}\right)$, *we have*

$$\|\widehat{\psi} - \psi\|_{L^2} = \mathcal{O}_p\left(n^{-1/3}\sqrt{\log n} + r_1(n)r_2(n)\right).$$

where $\|\hat{\pi} - \pi\|_\infty = \mathcal{O}_p(r_1(n))$ *and* $\|\hat{\mu} - \mu\|_\infty = \mathcal{O}_p(r_2(n))$.

Remark 3 (**On the assumptions**). *In Theorem 2, assumptions (1) and the first half of (3) are weak and standard conditions for establishing convergence rate of spline estimators (Huang et al., 2003; 2004). Assumption (2) bounds the tail behavior of* V. *The second half of (3) restricts the growth rate of* K_n, *which is a typical assumption (Huang et al., 2003; 2004) but with different rate as a result of uniform bound. Assumption (4) states that at least one of* $\hat{\mu}, \hat{\pi}$ *should be consistent, which implies the double robustness of* $\hat{\psi}$. *Assumption (5) considers the complexity of model space, and is a common assumption for problems with nuisance functions (Kennedy et al., 2017).*

Remark 4 (**On the consistency of** $\bar{\mu}$ **and** $\bar{\pi}$). *We want to point out that adding targeted regularization does not affect the limit of* $\hat{\mu}$ *and* $\hat{\pi}$ *in large sample asymptotics. That is, the limit of* $\hat{\mu}$ *and* $\hat{\pi}$ *using loss (4) will be the same as using loss (1). We refer the reader to Appendix A.1 for more detailed discussion and proof.*

Notice that our proof for Theorem 2 can also be adapted for analyzing modified one-step TMLE (Van Der Laan & Rubin, 2006). With very similar assumptions, we obtain double robustness and the same consistency rate for TMLE estimator.

5 Related Work

The Varying Coefficient Structure Varying coefficient (linear) model is first proposed as an extension of linear model (Hastie & Tibshirani, 1993; Fan et al., 1999), which is usually used for modeling longitudinal data (Huang et al., 2004; Zhang & Wang, 2015; Li et al., 2017; Ye et al., 2019). The key motivation of varying coefficient model is a dimension reduction technique that avoids the curse of dimensionality for statistical estimation. Different from those models, our varying coefficient structured is applied on a complex neural network model with a different motivation of enhancing the expressiveness of the treatment effect. Besides, building a hierarchical structure on the network parameter is also explored by the HyperNetwork (Stanley et al., 2009; Ha et al., 2016). Hypernetworks provide an abstraction that mimics the biology structure: the relationship between a genotype (the hypernetwork), and a phenotype (the main network). The weight of the main network is also a function of a latent embedding variable, which is learned with end-to-end training. HyperNetwork trains a much smaller network to generate the weights of a larger main network in order to reduce search space, while our network directly trains the main network whose weights are linear combinations of spline functions of treatment. And our network is proposed in order to appropriately incorporate treatment into modelling, which is not touched on in HyperNetwork.

Neural Network Structure for Treatment Effect Estimation We refer readers to introduction for the connections and comparisons with previous works using feed forward neural network for treatment effect estimation. In addition to feed forward neural network, previous works also utilize other networks to learn treatment effects. For example, Yoon et al. (2018); Bica et al. (2020) estimate the causal effect via learning to generate the counterfactual. And Louizos et al. (2017) learns the causal effect by learning deep variable models using variational autoencoder. Compared with our method, their approaches are mainly heuristic and lack theoretical guarantee for the asymptotic correctness of the estimator.

Doubly Robustness, TMLE and Targeted Regularization Chernozhukov et al. (2017; 2018) develop theory for 'double machine learning' showing the convergence rate for doubly robust estimator.

Dataset	Model	Naive	Doubly Robust	TMLE	Target Regular
Simulation	Dragonnet	0.045 ± 0.00094	0.026 ± 0.0012	0.037 ± 0.00086	0.028 ± 0.00088
	Drnet	0.042 ± 0.00090	0.023 ± 0.0011	0.035 ± 0.00083	0.027 ± 0.00086
	Vcnet	0.018 ± 0.00098	0.022 ± 0.0013	0.016 ± 0.00082	0.014 ± 0.00091
IHDP	Dragonnet	0.350 ± 0.016	0.307 ± 0.016	0.252 ± 0.0087	0.208 ± 0.0072
	DRnet	0.316 ± 0.016	0.274 ± 0.014	0.274 ± 0.018	0.230 ± 0.0086
	Vcnet	0.189 ± 0.013	0.190 ± 0.013	0.148 ± 0.010	0.117 ± 0.0085
News	Dragonnet	0.180 ± 0.0081	0.155 ± 0.0057	0.179 ± 0.0080	0.149 ± 0.0051
	DRnet	0.183 ± 0.0084	0.141 ± 0.0054	0.183 ± 0.0083	0.114 ± 0.0041
	Vcnet	0.028 ± 0.0011	0.023 ± 0.0013	0.028 ± 0.0010	0.024 ± 0.0009

Table 1: VCNet with Targeted regularization is SOTA among neural network based methods. Numbers reported are AMSE of testing data based on 100 repeats, and numbers after $\pm$ are the estimated standard deviation of mean.

Despite its good asymptotic property, doubly robust estimators can be unstable due to the presence of conditional density estimator at denominator. Targeted Maximum Likelihood Estimation (TMLE) (Van der Laan & Rose, 2011) and targeted regularization (Shi et al., 2019) are then proposed to overcome this issue by introducing an extra perturbation parameter into the model. To the best of our knowledge, previous work on TMLE and targeted regularization focus on estimating a single quantity, such as $\psi(1) - \psi(0)$ in binary treatment (Shi et al., 2019; Van der Laan & Rose, 2011) case or averaged treatment effect $\mathbb{E}\psi(t)$ for continuous treatment (Kennedy et al., 2017) while we give the first targeted regularization and TMLE for inferring the whole ADRF curve.

6 Experiments

Baseline This paper is focused on adapting neural nets to estimate ADRF. Thus, we compare against two neural network based methods: Dragonnet (Shi et al., 2019) and DRNet (Schwab et al., 2019). Dragonnet is SOTA among neural network methods for estimating ATE in binary setting. Following (Schwab et al., 2019), we concatenate T as an extra input and further improve by using separate heads for T in different intervals. DRNet is SOTA in estimating individual dose-response curve. The estimation of ADRF is provably and empirically improved by adding a conditional density estimator head (Shi et al., 2019). Thus, for fairness, we add a conditional density estimating head for DRNet. To demonstrate the effectiveness of targeted regularization (TR), for all methods we implement four versions: naive version (with conditional density estimator head, trained using loss (1)), doubly robust version (Kennedy et al., 2017) by regressing (2) on treatment with $\hat{\mu}, \hat{\pi}$ trained using loss (1), TMLE (Van Der Laan & Rubin, 2006) version with initial estimator trained using loss (1), and TR version trained using loss (4).

Experiment Setting Following Schwab et al. (2019), we use the average mean squared error (AMSE) on test set for evaluation: $\widehat{\text{AMSE}} = \frac{1}{S}\sum_{s=1}^{S}\int_{\mathcal{T}}\left(\widehat{\psi_s(t)} - \psi(t)\right)^2 \pi(t)dt$ where $\widehat{\psi_s(t)}$ is the estimated $\psi(t)$ in the s-th simulation. For synthetic dataset, training size is 500 and test size is 200. For IHDP and News, we randomly split the data into training (67%) and testing (33%). Due to space limit, we refer reader to Appendix A.4 for other details of the experiment.

Results In Table 1, by comparing results in each column, we observe a significant performance boost from the varying coefficient structure. Comparing results in each row, we find that naive versions consistently perform the worst, targeted regularization often achieves the best performance, whereas performance of doubly robust estimator and TMLE varies across datasets.

7 Conclusion

This work proposes a novel varying coefficient network and generalizes targeted regularization to a continuous curve. We give theorem showing its consistency and double robustness. Experiments show that VCNet structure and targeted regularization boosts performance independently and when used together, it achieves state-of-the-art performance.

REFERENCES

Ahmed M Alaa and Mihaela van der Schaar. Bayesian inference of individualized treatment effects using multi-task gaussian processes. In *Advances in Neural Information Processing Systems*, pp. 3424–3432, 2017.

Luca Ambrogioni, Umut Güçlü, Marcel AJ van Gerven, and Eric Maris. The kernel mixture network: A nonparametric method for conditional density estimation of continuous random variables. *arXiv preprint arXiv:1705.07111*, 2017.

Peter L Bartlett and Shahar Mendelson. Rademacher and gaussian complexities: Risk bounds and structural results. *Journal of Machine Learning Research*, 3(Nov):463–482, 2002.

Ioana Bica, James Jordon, and Mihaela van der Schaar. Estimating the effects of continuous-valued interventions using generative adversarial networks. *arXiv preprint arXiv:2002.12326*, 2020.

Christopher M Bishop. Mixture density networks. 1994.

Victor Chernozhukov, Denis Chetverikov, Mert Demirer, Esther Duflo, Christian Hansen, and Whitney Newey. Double/debiased/neyman machine learning of treatment effects. *American Economic Review*, 107(5):261–65, 2017.

Victor Chernozhukov, Denis Chetverikov, Mert Demirer, Esther Duflo, Christian Hansen, Whitney Newey, and James Robins. Double/debiased machine learning for treatment and structural parameters, 2018.

Chin-Tsang Chiang, John A Rice, and Colin O Wu. Smoothing spline estimation for varying coefficient models with repeatedly measured dependent variables. *Journal of the American Statistical Association*, 96(454): 605–619, 2001.

Balázs Csanád Csáji et al. Approximation with artificial neural networks. *Faculty of Sciences, Etvs Lornd University, Hungary*, 24(48):7, 2001.

Loic Desquilbet and François Mariotti. Dose-response analyses using restricted cubic spline functions in public health research. *Statistics in medicine*, 29(9):1037–1057, 2010.

Laurent Dinh, Jascha Sohl-Dickstein, and Samy Bengio. Density estimation using real nvp. *arXiv preprint arXiv:1605.08803*, 2016.

Jianqing Fan, Wenyang Zhang, et al. Statistical estimation in varying coefficient models. *The annals of Statistics*, 27(5):1491–1518, 1999.

Max H Farrell, Tengyuan Liang, and Sanjog Misra. Deep neural networks for estimation and inference: Application to causal effects and other semiparametric estimands. *arXiv preprint arXiv:1809.09953*, 2018.

Christian Fong, Chad Hazlett, Kosuke Imai, et al. Covariate balancing propensity score for a continuous treatment: Application to the efficacy of political advertisements. *The Annals of Applied Statistics*, 12(1): 156–177, 2018.

David Ha, Andrew Dai, and Quoc V Le. Hypernetworks. *arXiv preprint arXiv:1609.09106*, 2016.

Trevor Hastie and Robert Tibshirani. Varying-coefficient models. *Journal of the Royal Statistical Society: Series B (Methodological)*, 55(4):757–779, 1993.

Jennifer L Hill. Bayesian nonparametric modeling for causal inference. *Journal of Computational and Graphical Statistics*, 20(1):217–240, 2011.

Keisuke Hirano and Guido W Imbens. The propensity score with continuous treatments. *Applied Bayesian modeling and causal inference from incomplete-data perspectives*, 226164:73–84, 2004.

Jianhua Z Huang, Colin O Wu, and Lan Zhou. Polynomial spline estimation and inference for varying coefficient models with longitudinal data. *Statistica Sinica*, pp. 763–788, 2004.

Jianhua Z Huang et al. Local asymptotics for polynomial spline regression. *The Annals of Statistics*, 31(5): 1600–1635, 2003.

Kosuke Imai and David A Van Dyk. Causal inference with general treatment regimes: Generalizing the propensity score. *Journal of the American Statistical Association*, 99(467):854–866, 2004.

Fredrik Johansson, Uri Shalit, and David Sontag. Learning representations for counterfactual inference. In *International conference on machine learning*, pp. 3020–3029, 2016.

Edward H Kennedy, Zongming Ma, Matthew D McHugh, and Dylan S Small. Non-parametric methods for doubly robust estimation of continuous treatment effects. *Journal of the Royal Statistical Society: Series B (Statistical Methodology)*, 79(4):1229–1245, 2017.

Jialiang Li, Chao Huang, Zhub Hongtu, and Alzheimer's Disease Neuroimaging Initiative. A functional varying-coefficient single-index model for functional response data. *Journal of the American Statistical Association*, 112(519):1169–1181, 2017.

Christos Louizos, Uri Shalit, Joris M Mooij, David Sontag, Richard Zemel, and Max Welling. Causal effect inference with deep latent-variable models. In *Advances in Neural Information Processing Systems*, pp. 6446–6456, 2017.

Jonathan Masci, Ueli Meier, Dan Cireşan, and Jürgen Schmidhuber. Stacked convolutional auto-encoders for hierarchical feature extraction. In *International conference on artificial neural networks*, pp. 52–59. Springer, 2011.

Olli A Meretoja and Kari Wirtavuori. Two-dose technique to create an individual dose–response curve for atracurium. *Anesthesiology: The Journal of the American Society of Anesthesiologists*, 70(5):732–736, 1989.

David Newman. Bag of words data set, 2008.

BN Prichard and PM Gillam. Assessment of propranolol in angina pectoris. clinical dose response curve and effect on electrocardiogram at rest and on exercise. *British heart journal*, 33(4):473, 1971.

Danilo Jimenez Rezende and Shakir Mohamed. Variational inference with normalizing flows. *arXiv preprint arXiv:1505.05770*, 2015.

Jonas Rothfuss, Fabio Ferreira, Simon Walther, and Maxim Ulrich. Conditional density estimation with neural networks: Best practices and benchmarks. *arXiv preprint arXiv:1903.00954*, 2019.

ARTHUR B Schneider, ELAINE Ron, Jay Lubin, Marilyn Stovall, and Theresa C Gierlowski. Dose-response relationships for radiation-induced thyroid cancer and thyroid nodules: evidence for the prolonged effects of radiation on the thyroid. *The Journal of Clinical Endocrinology & Metabolism*, 77(2):362–369, 1993.

Patrick Schwab, Lorenz Linhardt, Stefan Bauer, Joachim M Buhmann, and Walter Karlen. Learning counterfactual representations for estimating individual dose-response curves. *arXiv preprint arXiv:1902.00981*, 2019.

Uri Shalit, Fredrik D Johansson, and David Sontag. Estimating individual treatment effect: generalization bounds and algorithms. In *Proceedings of the 34th International Conference on Machine Learning-Volume 70*, pp. 3076–3085. JMLR. org, 2017.

Claudia Shi, David Blei, and Victor Veitch. Adapting neural networks for the estimation of treatment effects. In *Advances in Neural Information Processing Systems*, pp. 2503–2513, 2019.

Kenneth O Stanley, David B D'Ambrosio, and Jason Gauci. A hypercube-based encoding for evolving large-scale neural networks. *Artificial life*, 15(2):185–212, 2009.

Timothy J Threlfall and Dallas R English. Sun exposure and pterygium of the eye: a dose-response curve. *American journal of ophthalmology*, 128(3):280–287, 1999.

Brian L Trippe and Richard E Turner. Conditional density estimation with bayesian normalising flows. *arXiv preprint arXiv:1802.04908*, 2018.

Mark J Van der Laan and Sherri Rose. *Targeted learning: causal inference for observational and experimental data*. Springer Science & Business Media, 2011.

Mark J Van Der Laan and Daniel Rubin. Targeted maximum likelihood learning. *The international journal of biostatistics*, 2(1), 2006.

Mao Ye, Zhao-Hua Lu, Yimei Li, and Xinyuan Song. Finite mixture of varying coefficient model: Estimation and component selection. *Journal of Multivariate Analysis*, 171:452–474, 2019.

Jinsung Yoon, James Jordon, and Mihaela van der Schaar. Ganite: Estimation of individualized treatment effects using generative adversarial nets. 2018.

Xiaoke Zhang and Jane-Ling Wang. Varying-coefficient additive models for functional data. *Biometrika*, 102(1): 15–32, 2015.

A APPENDIX

A.1 ON THE CONSISTENCY OF $\bar{\mu}$ AND $\bar{\pi}$

We show that adding targeted regularization does not affect the limit of $\hat{\mu}$ and $\hat{\pi}$ in large sample asymptotics. That is, the limit of $\hat{\mu}$ and $\hat{\pi}$ using loss (4) will be the same as using loss (1).

Denote

$$\mathbb{P}\ell(\mu^{\text{NN}}, \pi^{\text{NN}}) = \mathbb{P}\left[(y - \mu^{\text{NN}})^2 + \alpha \log \pi^{\text{NN}}(t \mid \boldsymbol{x})\right]$$
$$\mathbb{P}_n\ell(\mu^{\text{NN}}, \pi^{\text{NN}}) = \frac{1}{n}\sum_{i=1}^{n}\left[(y_i - \mu^{\text{NN}}(t_i, \boldsymbol{x}_i))^2 + \alpha\pi^{\text{NN}}(t_i \mid \boldsymbol{x}_i)\right].$$

Suppose that (μ', π') is the minimizer of loss $\mathbb{P}\ell(\mu^{\text{NN}}, \pi^{\text{NN}})$ and $(\hat{\mu}, \hat{\pi}, \hat{\epsilon}_n)$ is the minimizer of $\mathcal{L}_{\text{FTR}}$. For simplicity, we ignore the unidentifiability of neural network parameterization and assume (μ', π') is the unique minimizer in the sense that for any $\epsilon > 0$, there exist $\eta(\epsilon) > 0$ such that

$$\inf_{\|\mu^{\text{NN}}, -\mu'\|_{L^2} + \|\pi^{\text{NN}} - \pi'\|_{L^2} > \epsilon} \left[\mathbb{P}\ell(\mu^{\text{NN}}, \pi^{\text{NN}}) - \mathbb{P}\ell(\mu', \pi')\right] > \eta(\epsilon).$$

We have

$$\begin{aligned}
\mathbb{P}\ell(\hat{\mu}, \hat{\pi}) - \mathbb{P}\ell(\mu', \pi') &\leq \mathbb{P}_n\ell(\hat{\mu}, \hat{\pi}) - \mathbb{P}\ell(\mu', \pi') + \left|(\mathbb{P} - \mathbb{P}_n)\,\ell(\hat{\mu}, \hat{\pi})\right| + \left|(\mathbb{P} - \mathbb{P}_n)\,\ell(\mu', \pi')\right| \\
&\overset{(a)}{\leq} \mathbb{P}_n\ell(\hat{\mu}, \hat{\pi}) - \mathbb{P}\ell(\mu', \pi') + \mathcal{O}_p(n^{-1/2}) \\
&= (\mathbb{P}_n\ell(\hat{\mu}, \hat{\pi}) + \beta_n\mathcal{R}[\hat{\mu}, \hat{\pi}, \hat{\epsilon}_n]) - \left(\mathbb{P}\ell(\mu', \pi') + \beta_n\mathcal{R}[\mu', \pi', 0]\right) + \mathcal{O}_p(n^{-1/2}) \\
&+ \beta_n\left(\mathcal{R}[\mu', \pi', 0] - \mathcal{R}[\hat{\mu}, \hat{\pi}, \hat{\epsilon}_n]\right) \\
&\overset{(b)}{\leq} \beta_n\left(\mathcal{R}[\mu', \pi', 0] - \mathcal{R}[\hat{\mu}, \hat{\pi}, \hat{\epsilon}_n]\right) + \mathcal{O}_p(n^{-1/2}) \\
&\leq \beta_n\mathcal{R}[\mu', \pi', 0] + \mathcal{O}_p(n^{-1/2}) \\
&\overset{(c)}{=} \mathcal{O}_p(n^{-1/2}).
\end{aligned}$$

Here (a) uses the fact that $\mu^{\text{NN}}, \pi^{\text{NN}}$ is uniformly bounded, $\text{Rad}_n(\mathcal{Q}), \text{Rad}_n(\mathcal{U}) = \mathcal{O}(n^{-1/2})$ and the Lipschitz constant of $\log(s)$ is bounded when $s \in [1/c, c]$ for some finite c. (b) comes from the fact that $(\hat{\mu}, \hat{\pi}, \hat{\epsilon}_n)$ is the minimizer of the empirical risk (with FTR). (c) is because of

$$\begin{aligned}
\mathcal{R}[\mu', \pi', 0] &= \frac{1}{n}\sum_{i=1}^{n}\left(y_i - \mu'\right)^2 \\
&= \mathbb{E}\left(y - \mu'\right)^2 + \mathcal{O}_p(n^{-1/2}) \\
&= \mathbb{E}(V^2) + \mathbb{E}(\mu - \mu')^2 + \mathcal{O}_p(n^{-1/2}) \\
&= \mathcal{O}(1).
\end{aligned}$$

Now we prove that $\|\hat{\mu} - \mu'\|_{L^2} + \|\hat{\pi} - \pi'\|_{L^2} = o_p(1)$. If it is not true, then there exists $s > 0$, when n is sufficiently large, $\|\hat{\mu} - \mu'\|_{L^2} + \|\hat{\pi} - \pi'\|_{L^2} \geq s$ and $\mathbb{P}\ell(\hat{\mu}, \hat{\pi}) - \mathbb{P}\ell(\mu', \pi') \leq \eta(s)$. It makes contradiction of the assumption that (μ', π') is the unique minimizer of $\mathbb{P}\ell(\mu^{\text{NN}}, \pi^{\text{NN}})$.

A.2 TECHNICAL PROOFS

In this section, we prove the two main theorems (Theorem 1 and Theorem 2) and give some additional results which are mentioned briefly in the main text.

A.2.1 EXTRA NOTATIONS

Here we introduce some additional notations useful for our subsequent proofs. We use P to denote probability cumulative distribution function. We write $\epsilon_n(t_0) \doteq \mathbb{P}\left[\frac{Y - \hat{\mu}_n(T, \boldsymbol{X})}{\hat{\pi}_n(T \mid \boldsymbol{X})} \mid T = t_0\right] / \mathbb{P}\left[\frac{1}{\hat{\pi}_n^2(T \mid \boldsymbol{X})} \mid T = t_0\right]$, where the subscript n in $\hat{\mu}_n$ and $\hat{\pi}_n$ are used to emphasize that the estimators are based on n samples. We denote $\hat{\epsilon}_n = \sum_{k=1}^{K}\hat{\alpha}_k\varphi_k(t_0)$ as the minimizer of loss 4 on B-spline basis. Denote $\boldsymbol{\varphi}^{K_n}(t) = (\varphi_1(t), \varphi_2(t), \cdots, \varphi_{K_n}(t))^T \in \mathbb{R}^{K_n}$, $B_n = \left(\boldsymbol{\varphi}^{K_n}(t_1), \cdots, \boldsymbol{\varphi}^{K_n}(t_n)\right)^T \in \mathbb{R}^{n \times K_n}$. Write $\Pi_n = \text{diag}\left(\hat{\pi}_n(t_1 \mid \boldsymbol{x}_1), \hat{\pi}_n(t_2 \mid \boldsymbol{x}_2), \cdots, \hat{\pi}_n(t_n \mid \boldsymbol{x}_n)\right)$,

$\tilde{\Pi}_n = \text{diag}\left(\frac{1}{\mathbb{P}\left(\frac{1}{\hat{\pi}_n(T|\boldsymbol{X})}|T=t_1\right)}, \frac{1}{\mathbb{P}\left(\frac{1}{\hat{\pi}_n(T|\boldsymbol{X})}|T=t_2\right)}, \cdots, \frac{1}{\mathbb{P}\left(\frac{1}{\hat{\pi}_n(T|\boldsymbol{X})}|T=t_n\right)}\right)$. We denote $\boldsymbol{Z}_n = (z_1, z_2, \cdots, z_n)^T \in \mathbb{R}^n$ where $Z_i = \frac{Y_i - \hat{\mu}_n(T_i, \boldsymbol{X}_i)}{\hat{\pi}_n(T_i|\boldsymbol{X}_i)}$, and $\tilde{\boldsymbol{Z}}_n = (\tilde{z}_1, \tilde{z}_2, \cdots, \tilde{z}_n)^T \in \mathbb{R}^n$ where $\tilde{z}_i = \mathbb{P}\left(\frac{Y - \hat{\mu}_n(T, \boldsymbol{X})}{\hat{\pi}_n(T|\boldsymbol{X})} \mid T = t_i\right)$. We write $\boldsymbol{\alpha} = (\alpha_1, \alpha_2, \cdots, \alpha_K)^T \in \mathbb{R}^K$, $\hat{\boldsymbol{\alpha}} = \left(B_n^T \Pi_n^{-2} B_n\right)^{-1} B_n^T \boldsymbol{Z}_n$ and $\tilde{\boldsymbol{\alpha}} = \left(B_n^T \Pi_n^{-2} B_n\right)^{-1} B_n^T \Pi_n^{-2} \tilde{\Pi}_n^2 \tilde{\boldsymbol{Z}}_n$. For convenience we write $\tilde{\boldsymbol{R}}_n = \tilde{\Pi}_n^2 \tilde{\boldsymbol{Z}}_n$. We denote $\mathbf{1} = (1, 1, \cdots, 1)^T \in \mathbb{R}^n$ and $\rho_n = K_n^{-2}$. We denote δ_{t_0} as the Dirac measure centred on t_0. We use p and π to denote density. For any function f and function spaces $\mathcal{F}_1, \mathcal{F}_2$, we write $\mathcal{F}_1 + \mathcal{F}_2 = \{f_1 + f_2 : f_1 \in \mathcal{F}_1, f_2 \in \mathcal{F}_2\}$, $\mathcal{F}_1\mathcal{F}_2 = \{f_1 f_2 : f_1 \in \mathcal{F}_1, f_2 \in \mathcal{F}_2\}$, $f\mathcal{F} = \{fh : h \in \mathcal{F}\}$, $f \circ \mathcal{F} = \{f \circ h : h \in \mathcal{F}\}$, and $\mathcal{F}^a = \{f^a : f \in \mathcal{F}\}$, $\forall a \in \mathbb{R}$.

A.2.2 Useful Lemmas

This section gives lemmas which are used in our proofs of main theorems.

Recall that Theorem 1 consists of two parts: the efficient influence function of $\psi(t_0)$ and the double robustness of the efficient influence function. Notice that $\psi(t_0)$ can be written as a special case of a more general parameter $\Gamma = \int_{\mathcal{T}} \gamma(t; \mathbb{P}_T)\psi(t) d\mathbb{P}_T(t)$, which includes many parameters of interest like $\Gamma = \int \psi(t) d\mathbb{P}_T(t)$ and $\Gamma = \psi(1) - \psi(0)$. Here $\gamma(t; \mathbb{P}_T) \doteq \gamma(t)$ is a function of t and it might also depend on the unknown probability measure $\mathbb{P}_T$. We provide the efficient influence function of the more general Γ below.

Lemma 1. *Define $\Gamma = \int_{\mathcal{T}} \gamma(t; \mathbb{P}_T)\psi(t) d\mathbb{P}_T(t)$. The efficient influence function for Γ is*

$$\begin{aligned}\zeta(Y, \boldsymbol{X}, T, \pi, \mu, \Gamma) = &\gamma(T)\xi(Y, \boldsymbol{X}, T, \pi, \mu) - \Gamma + \int_{\mathcal{T}} \mu(t, \boldsymbol{X})\gamma(t) d\mathbb{P}_T(t) + \frac{\gamma_\epsilon'(T)}{l_\epsilon'(T; 0)} \int_{\mathcal{X}} \mu(T, \boldsymbol{x}) d\mathbb{P}(\boldsymbol{x}) \\ &- \int_{\mathcal{T}} \int_{\mathcal{X}} \gamma(t)\mu(t, x) d\mathbb{P}(x) d\mathbb{P}_T(t) - \mathbb{E}_T\left[\frac{\gamma_\epsilon'(T)}{l_\epsilon'(T; 0)} \int_{\mathcal{X}} \mu(T, \boldsymbol{x}) d\mathbb{P}(\boldsymbol{x})\right]\end{aligned}$$

where $\xi(Y, \boldsymbol{X}, T, \pi, \mu) = \frac{Y - \mu(T, \boldsymbol{X})}{\pi(T|\boldsymbol{X})} \int_{\mathcal{X}} \pi(T \mid \boldsymbol{x}) d\mathbb{P}(\boldsymbol{x}) + \int_{\mathcal{X}} \mu(T, \boldsymbol{x}) d\mathbb{P}(\boldsymbol{x})$, $\gamma_\epsilon'(T) = \frac{d\gamma(T; \mathbb{P}_{T,\epsilon})}{d\epsilon} \mid_{\epsilon=0}$, $l_\epsilon'(T; 0) = \frac{d \log \mathbb{P}_{T,\epsilon}(t)}{d\epsilon} \mid_{\epsilon=0}$ and $\mathbb{P}_{T,\epsilon}$ is a parametric submodel with parameter $\epsilon \in \mathbb{R}$ and $\mathbb{P}_{T,0}(t) = \mathbb{P}_T(t)$.

Remark 5. *Setting $\gamma(t) = \frac{d\delta_{t_0}}{d\mathbb{P}_T}$, we get the efficient influence function of $\psi(t_0)$. Setting $\gamma(t; \mathbb{P}_T) = 1$, we get $\Gamma = \int_{\mathcal{T}} \psi(t) d\mathbb{P}_T(t)$, which is the average outcome under a randomized trial and is a quantity of interest in its own right (Kennedy et al. (2017)). Setting $\gamma(t; \mathbb{P}_T) = \frac{d\delta_1}{d\mathbb{P}_T} - \frac{d\delta_0}{d\mathbb{P}_T}$, we get $\Gamma = \psi(1) - \psi(0)$, which is the average treatment effect.*

Recall that in Theorem 2, we use B-spline regression to estimate ϵ_n. In order to establish the convergence rate of our final estimator $\hat{\psi}$, we need to establish the convergence rate of the spline estimator $\hat{\epsilon}_n$ first.

Lemma 2. *Under assumptions in Theorem 2, we have*

$$\|\hat{\epsilon}_n - \epsilon_n\|_{L^2} = \mathcal{O}_P\left(n^{-1/3}\sqrt{\log n}\right)$$

Remark 6. *For fixed objective function, the convergence rate of the B-spline estimator to the truth is a standard result (Huang et al., 2004; 2003), which is $\mathcal{O}_p(n^{-2/5})$ when choosing $K_n \asymp n^{-1/5}$. However, Lemma 2 gives a uniform bound on a class of functions in order to deal with the fact that $\hat{\pi}_n$ and $\hat{\mu}_n$ are NOT fixed and dependent on the observations, which is of a larger order $n^{-1/3}\sqrt{\log n}$ when choosing the optimal $K_n \asymp n^{-1/6}$.*

Lemma 3. *Under assumption in Theorem 2, there are positive constants M_1 and M_2 such that except on an event whose probability tends to zero, all the eigenvalues of $(K_n/n) B_n^T \Pi_n^{-2} B_n$ fall between M_1 and M_2, and consequently, $B_n^T \Pi_n^{-2} B_n$ is invertible.*

Lemma 4. *Assume $\|\mathcal{F}_1\|_\infty < \infty$ and $\|\mathcal{F}_2\|_\infty < \infty$, we have*

$$Rad_n(\mathcal{F}_1\mathcal{F}_2) \leq \frac{1}{2}(Rad_n(\mathcal{F}_1) + Rad_n(\mathcal{F}_2))(\|\mathcal{F}_1\|_\infty + \|\mathcal{F}_2\|_\infty)$$

A.2.3 Proof of Theorem 1

Proof. First, the efficient influence function of $\psi(t_0)$ is a direct corollary of Lemma 1 by plugging in $\gamma(t; \mathbb{P}_T) = \frac{d\delta_{t_0}}{d\mathbb{P}_T}$. So here we only need to prove that the efficient influence function is doubly robust.

We inherit the notation in Lemma 1. Notice that $\gamma(t;\mathbb{P}_T) = \frac{d\delta_{t_0}}{d\mathbb{P}_T}$ and $\frac{\gamma'_\epsilon(T,\hat{\mathbb{P}}_T)}{l'_\epsilon(T;0)} = -\gamma(T,\hat{\mathbb{P}}_T)$. For brevity we use $\gamma(t)$ to represent $\gamma(T,\mathbb{P}_T)$. By repeated using conditional expectation and definition of l'_ϵ, we have

$$
\begin{aligned}
&\mathbb{P}\zeta(Y,\boldsymbol{X},T,\hat{\pi},\hat{\mu}) \\
=& \mathbb{P}\left(\gamma(T,\hat{\mathbb{P}}_T)\frac{Y-\hat{\mu}(T,\boldsymbol{X})}{\hat{\pi}(T\mid\boldsymbol{X})}\hat{\pi}(T) + \gamma(T,\hat{\mathbb{P}}_T)\int_{\mathcal{X}}\hat{\mu}(T,\boldsymbol{x})d\mathbb{P}(\boldsymbol{x})\right) - \int_{\mathcal{T}}\gamma(t)\psi(t)d\mathbb{P}_T(t) \\
&+ \mathbb{P}\left(\int_{\mathcal{T}}\hat{\mu}(t,\boldsymbol{X})\gamma(t,\hat{\mathbb{P}}_T)d\hat{\mathbb{P}}_T(t)\right) + \mathbb{P}\left(\frac{\gamma'_\epsilon(T,\hat{\mathbb{P}}_T)}{l'_\epsilon(T;0)}\int_{\mathcal{X}}\hat{\mu}(T,\boldsymbol{x})d\mathbb{P}(\boldsymbol{x})\right) - \int_{\mathcal{T}}\int_{\mathcal{X}}\gamma(t,\hat{\mathbb{P}}_T)\hat{\mu}(t,x)d\mathbb{P}(x)d\hat{\mathbb{P}}_T(t) \\
&- \int_{\mathcal{T}}\frac{\gamma'_\epsilon(t,\hat{\mathbb{P}}_T)}{l'_\epsilon(t;0)}\int_{\mathcal{X}}\hat{\mu}(t,\boldsymbol{x})d\mathbb{P}(\boldsymbol{x})d\hat{\mathbb{P}}_T(t) \\
=& \mathbb{P}_T\left(\gamma(T,\hat{\mathbb{P}}_T)\right)\mathbb{P}_{\boldsymbol{X}\mid T}\left(\frac{\mu(T,\boldsymbol{X})-\hat{\mu}(T,\boldsymbol{X})}{\hat{\pi}(T\mid\boldsymbol{X})}\hat{\pi}(T)\right) + \mathbb{P}_T\gamma(T,\hat{\mathbb{P}}_T)\int_{\mathcal{X}}\hat{\mu}(T,\boldsymbol{x})d\mathbb{P}(\boldsymbol{x}) - \int_{\mathcal{T}}\gamma(t)\psi(t)d\mathbb{P}_T(t) \\
&- \mathbb{P}\left(\gamma(T,\hat{\mathbb{P}}_T)\int_{\mathcal{X}}\hat{\mu}(T,\boldsymbol{x})d\mathbb{P}(\boldsymbol{x})\right) + \int_{\mathcal{T}}\gamma(t,\hat{\mathbb{P}}_T)\int_{\mathcal{X}}\hat{\mu}(t,\boldsymbol{x})d\mathbb{P}(\boldsymbol{x})d\hat{\mathbb{P}}_T(t) \\
=& \int_{\mathcal{T}}\gamma(t,\hat{\mathbb{P}}_T)\int_{\mathcal{X}}\frac{\pi(t\mid\boldsymbol{x})/\pi(t)}{\hat{\pi}(t\mid\boldsymbol{x})/\hat{\pi}(t)}\left(\mu(t,\boldsymbol{x})-\hat{\mu}(t,\boldsymbol{x})\right)d\mathbb{P}(\boldsymbol{x})d\mathbb{P}_T(t) \\
&- \int_{\mathcal{T}}\gamma(T,\mathbb{P}_T)\int_{\mathcal{X}}\mu(t,\boldsymbol{x})d\mathbb{P}(\boldsymbol{x})d\mathbb{P}_T(t) + \int_{\mathcal{T}}\gamma(t,\hat{\mathbb{P}}_T)\int_{\mathcal{X}}\hat{\mu}(t,\boldsymbol{x})d\mathbb{P}(\boldsymbol{x})d\hat{\mathbb{P}}_T(t) \\
=& \int_{\mathcal{T}}\delta(t-t_0)\int_{\mathcal{X}}\left(\frac{\pi(t\mid\boldsymbol{x})}{\hat{\pi}(t\mid\boldsymbol{x})}-1\right)\left(\mu(t,\boldsymbol{x})-\hat{\mu}(t,\boldsymbol{x})\right)d\mathbb{P}(\boldsymbol{x})dt \\
=& \int_{\mathcal{X}}\left(\frac{\pi(t_0\mid\boldsymbol{x})}{\hat{\pi}(t_0\mid\boldsymbol{x})}-1\right)\left(\mu(t_0,\boldsymbol{x})-\hat{\mu}(t_0,\boldsymbol{x})\right)d\mathbb{P}(\boldsymbol{x})
\end{aligned}
$$

It is obvious that the desired conclusion hold. □

A.2.4 Proof of Theorem 2

Proof. From Lemma 2, we have

$$
\|\hat{\epsilon}_n - \epsilon_n\|_{L^2} = \mathcal{O}_p(n^{-1/3}\sqrt{\log n})
$$

$$
\begin{aligned}
&\left\|\hat{\epsilon}(t)\int_{\mathcal{X}}\frac{1}{\hat{\pi}(t\mid\boldsymbol{X})}d\mathbb{P}_n(\boldsymbol{X}) - \mathbb{P}\left[\delta(T-t_0)\frac{Y-\hat{\mu}(T,\boldsymbol{X})}{\hat{\pi}(T\mid\boldsymbol{X})}\right]\right\|_{L^2} \\
=& \left\|\hat{\epsilon}(t)\int_{\mathcal{X}}\frac{1}{\hat{\pi}(t\mid\boldsymbol{X})}d\mathbb{P}_n(\boldsymbol{X}) - \pi(t)\mathbb{P}\left(\frac{Y-\hat{\mu}_n(\boldsymbol{X},T)}{\hat{\pi}_n(\boldsymbol{X},T)}\mid T=t\right)\right\|_{L^2} \\
\leq& \left\|(\hat{\epsilon}(t)-\epsilon(t))\int_{\mathcal{X}}\frac{1}{\hat{\pi}(t\mid\boldsymbol{X})}d\mathbb{P}_n(\boldsymbol{X})\right\|_{L^2} + \left\|\epsilon(t)\left(\int_{\mathcal{X}}\frac{1}{\hat{\pi}(t\mid\boldsymbol{X})}d\mathbb{P}_n(\boldsymbol{X}) - \pi(t)\mathbb{P}\left(\frac{1}{\hat{\pi}^2}\mid T\right)\right)\right\|_{L^2} \\
\lesssim& \|\hat{\epsilon}-\epsilon\|_{L^2} + \left\|\epsilon(t)\left(\int_{\mathcal{X}}\frac{1}{\hat{\pi}(t\mid\boldsymbol{X})}d\left(\mathbb{P}_n-\mathbb{P}\right)(\boldsymbol{X})\right) + \epsilon(t)\left(\int_{\mathcal{X}}\frac{1}{\hat{\pi}(t\mid\boldsymbol{X})}d\mathbb{P}(\boldsymbol{X}) - \pi(t)\mathbb{P}\left(\frac{1}{\hat{\pi}^2}\mid T\right)\right)\right\|_{L^2} \\
=& \|\hat{\epsilon}-\epsilon\|_{L^2} + \left\|\epsilon(t)\left(\int_{\mathcal{X}}\frac{1}{\hat{\pi}(t\mid\boldsymbol{X})}d\left(\mathbb{P}_n-\mathbb{P}\right)(\boldsymbol{X})\right)\right\|_{L^2} \\
&+ \left\|\mathbb{P}\left(\frac{\mu(\boldsymbol{X},T)-\hat{\mu}_n(\boldsymbol{X},T)}{\hat{\pi}_n(\boldsymbol{X},T)}\mid T=t\right)\int_{\mathcal{X}}\frac{\hat{\pi}(t\mid\boldsymbol{X})-\pi(t\mid\boldsymbol{X})}{\hat{\pi}(t\mid\boldsymbol{X})}\frac{1}{\hat{\pi}(t\mid\boldsymbol{X})}d\mathbb{P}(\boldsymbol{X})\right\|_{L^2} \\
\lesssim& \mathcal{O}_p\left(n^{-1/3}\sqrt{\log n} + r_1(n)r_2(n)\right)
\end{aligned}
\tag{5}
$$

Since from generalization bound and condition (5), we know

$$
\sup_{t_0\in[0,1]}\left|\frac{1}{n}\sum_{i=1}^{n}\hat{\mu}_n(x_i,t_0) - \mathbb{P}\hat{\mu}_n(X,t_0)\right| = \sup_{t_0\in[0,1]}\left|\mathbb{P}_n\hat{g}_{t_0}(X) - \mathbb{P}\hat{g}_{t_0}(X)\right| = \mathcal{O}_p(n^{-1/2})
$$

Thus,

$$
\left\|\frac{1}{n}\sum_{i=1}^{n}\hat{\mu}_n(x_i,t_0) - \mathbb{P}\hat{\mu}_n(X,t_0)\right\|_{L^2} = \mathcal{O}_p(n^{-1/2}) \tag{6}
$$

Recall that Theorem 1 says that if $\sup_{t\in[0,1]}\sup_{\boldsymbol{X}\in\mathcal{X}}|\hat{\pi}_n(t \mid \boldsymbol{X}) - \pi(t \mid \boldsymbol{X})| = \mathcal{O}_p(r_1(n))$, $\sup_{t\in[0,1]}\sup_{\boldsymbol{X}\in\mathcal{X}}|\hat{\mu}_n(t,\boldsymbol{X}) - Q(t,\boldsymbol{X})| = \mathcal{O}_p(r_2(n))$, then

$$\sup_{t_0\in[0,1]}\left|\mathbb{P}\left[\delta(T-t_0)\frac{Y-\hat{\mu}_n(T,\boldsymbol{X})}{\hat{\pi}_n(T\mid\boldsymbol{X})}+\hat{\mu}_n(t_0,\boldsymbol{X})\right]-\psi(t_0)\right| = \mathcal{O}_p(r_1(n)r_2(n)) \tag{7}$$

Combining Equation equation 5, Equation equation 6 and Equation equation 7, using triangle inequality, we have

$$\left\|\hat{\epsilon}(t)\int_{\mathcal{X}}\frac{1}{\hat{\pi}(t\mid\boldsymbol{x})}d\mathbb{P}_n(\boldsymbol{x})+\frac{1}{n}\sum_{i=1}^{n}\hat{\mu}_n(x_i,t_0)-\psi(t_0)\right\| = \mathcal{O}_p(n^{-1/3}\sqrt{\log n}+r_1(n)r_2(n))$$

So if we let

$$\hat{\psi}(t_0)=\hat{\epsilon}(t_0)\int_{\mathcal{X}}\frac{1}{\hat{\pi}(t_0\mid\boldsymbol{x})}d\mathbb{P}_n(\boldsymbol{x})+\frac{1}{n}\sum_{i=1}^{n}\hat{\mu}_n(x_i,t_0)=\frac{1}{n}\sum_{i=1}^{n}\left(\hat{\mu}(\boldsymbol{x}_i,t_0)+\frac{\hat{\epsilon}(t_0)}{\hat{\pi}(t_0\mid\boldsymbol{x}_i)}\right)$$

we have

$$\sup_{t_0\in[0,1]}|\hat{\psi}(t_0)-\psi(t_0)| = \mathcal{O}_p\left(n^{-1/3}\sqrt{\log n}+r_1(n)r_2(n)\right)$$

□

A.2.5 Proof of Lemma 1

Proof. The proof follows Kennedy et al. (2017). By definition, the efficient influence function for Γ is the unique function $\zeta(Y,\boldsymbol{X},T)$ such that

$$\Gamma'_\epsilon(0)=\mathbb{E}\left(\zeta(Y,\boldsymbol{X},T)\ell'_\epsilon(Y,\boldsymbol{X},T;0)\right).$$

Notice that

$$\Gamma(\epsilon)=\int_{\mathcal{T}}\gamma(t)\int_{\mathcal{X}}\int_{\mathcal{Y}}yp(y\mid\boldsymbol{x},t;\epsilon)p(\boldsymbol{x};\epsilon)p(t;\epsilon)dyd\boldsymbol{x}dt.$$

Thus we have

$$\begin{aligned}\Gamma'_\epsilon(0)=&\int_{\mathcal{T}}\gamma_\epsilon(t)\int_{\mathcal{X}}\int_{\mathcal{Y}}y\left[p'_\epsilon(y\mid\boldsymbol{x},t;0)p(\boldsymbol{x})+p(y\mid\boldsymbol{x},t)p'_\epsilon(\boldsymbol{x};0)\right]p(t)dyd\boldsymbol{x}dt\\&+\int_{\mathcal{T}}\gamma_\epsilon(t)\int_{\mathcal{X}}\int_{\mathcal{Y}}yp(y\mid\boldsymbol{x},t;\epsilon)p(\boldsymbol{x};\epsilon)p'_\epsilon(t;0)dyd\boldsymbol{x}dt\\&+\int_{\mathcal{T}}\gamma'_\epsilon(t)\int_{\mathcal{X}}\int_{\mathcal{Y}}yp(y\mid\boldsymbol{x},t;\epsilon)p(\boldsymbol{x};\epsilon)p(t;\epsilon)dyd\boldsymbol{x}dt\\\doteq& I_1+I_2+I_3,\end{aligned}$$

Notice that

$$\begin{aligned}I_1=&\int_{\mathcal{T}}\gamma(t)\int_{\mathcal{X}}\int_{\mathcal{Y}}y\left[\ell'_\epsilon(y\mid\boldsymbol{x},t;0)p(y\mid\boldsymbol{x},t)p(\boldsymbol{x})+p(y\mid\boldsymbol{x},t)\ell'_\epsilon(\boldsymbol{x};0)p(\boldsymbol{x})\right]p(t)dyd\boldsymbol{x}dt\\=&\int_{\mathcal{T}}\gamma(t)\left[\mathbb{E}_{\boldsymbol{X}}\mathbb{E}_{Y|\boldsymbol{X},T}\left(y\ell'_\epsilon(y\mid\boldsymbol{x},t;0)\right)+\mathbb{E}_{\boldsymbol{X}}\left(\mu(\boldsymbol{x},t)\ell'_\epsilon(\boldsymbol{x};0)\right)\right]p(t)dt.\\I_2=&\int_{\mathcal{T}}\gamma(t)\psi(t)p'_\epsilon(t;0)dt=\int_{\mathcal{T}}\gamma(t)\psi(t)\ell'_\epsilon(t;0)p(t)dt,\\I_3=&\int_{\mathcal{T}}\gamma'_\epsilon(t)\psi(t)p(t;0)dt\end{aligned}$$

Thus, we have

$$\Gamma'_\epsilon(0)=\int_{\mathcal{T}}\left\{\gamma(t)\left[\mathbb{E}_{\boldsymbol{X}}\mathbb{E}_{Y|\boldsymbol{X},T}\left(y\ell'_\epsilon(y\mid\boldsymbol{x},t;0)\right)+\mathbb{E}_{\boldsymbol{X}}\left(\mu(\boldsymbol{x},t)\ell'_\epsilon(\boldsymbol{x};0)\right)+\psi(t)\ell'_\epsilon(t;0)\right]+\gamma'_\epsilon(t)\psi(t)\right\}p(t)dt \tag{8}$$

Meanwhile, for $\mathbb{E}_{\boldsymbol{X},T,Y}\left(\zeta(Y,\boldsymbol{X},T)\ell'_\epsilon(Y,\boldsymbol{X},T;0)\right)$, from $\ell'_\epsilon(Y,\boldsymbol{X},T;0) = \ell'_\epsilon(Y|\boldsymbol{X},T;0) + \ell'_\epsilon(\boldsymbol{X},T;0)$, we have $\mathbb{E}_{\boldsymbol{X},T,Y}\left(\zeta(Y,\boldsymbol{X},T)\ell'_\epsilon(Y,\boldsymbol{X},T;0)\right) = \mathbb{E}_{\boldsymbol{X},T,Y}\left(\zeta(Y,\boldsymbol{X},T)\ell'_\epsilon(Y|\boldsymbol{X},T;0)\right) + \mathbb{E}_{\boldsymbol{X},T,Y}\left(\zeta(Y,\boldsymbol{X},T)\ell'_\epsilon(\boldsymbol{X},T;0)\right)$. Recall that

$$\begin{aligned}\zeta(Y,\boldsymbol{X},T,\pi,\mu)=&\gamma(T)\frac{Y-\mu(T,\boldsymbol{X})}{\pi(T\mid\boldsymbol{X})}\int_{\mathcal{X}}\pi(T\mid\boldsymbol{x})d\mathbb{P}(\boldsymbol{x})+\gamma(T)\int_{\mathcal{X}}\mu(T,\boldsymbol{x})d\mathbb{P}(\boldsymbol{x})-\Gamma\\&+\int_{\mathcal{T}}\mu(t,\boldsymbol{X})\gamma(t)d\mathbb{P}_T(t)+\frac{\gamma'_\epsilon(T)}{l'_\epsilon(T;0)}\int_{\mathcal{X}}\mu(T,\boldsymbol{x})d\mathbb{P}(\boldsymbol{x})\\&-\int_{\mathcal{T}}\int_{\mathcal{X}}\gamma(t)\mu(t,x)dp(x)d\mathbb{P}_T(t)-\mathbb{E}_T\left[\frac{\gamma'_\epsilon(T)}{l'_\epsilon(T;0)}\int_{\mathcal{X}}\mu(T,\boldsymbol{x})d\mathbb{P}(\boldsymbol{x})\right]\end{aligned}$$

We have

$$
\begin{aligned}
&\mathbb{E}_{\boldsymbol{X},T,Y}\left(\zeta(Y,\boldsymbol{X},T)\ell'_\epsilon(Y|\boldsymbol{X},T;0)\right)\\
&\overset{(a)}{=}\mathbb{E}_{\boldsymbol{X},T,Y}\left[\left(\gamma(T)\frac{Y}{\pi(T\mid\boldsymbol{X})}\int_{\mathcal{X}}\pi(T\mid\boldsymbol{x})d\mathbb{P}(\boldsymbol{x})\right)\ell'_\epsilon(Y|\boldsymbol{X},T;0)\right]\\
&\overset{(b)}{=}\int_{\mathcal{T}\times\mathcal{X}}\left[\gamma(t)\frac{\mathbb{E}_{Y|\boldsymbol{x},t}\left[Y\ell'_\epsilon(Y|\boldsymbol{x},t;0)\right]}{\pi(t\mid\boldsymbol{x})}\left(\int_{\mathcal{X}}\pi(t\mid\boldsymbol{x})d\mathbb{P}(\boldsymbol{x})\right)p(\boldsymbol{x})\pi(t|\boldsymbol{x})\right]dtd\boldsymbol{x}\\
&\overset{(c)}{=}\int_{\mathcal{T}\times\mathcal{X}}\gamma(t)\mathbb{E}_{Y|\boldsymbol{x},t}\left[Y\ell'_\epsilon(Y|\boldsymbol{x},t;0)\right]p(t)p(\boldsymbol{x})dtd\boldsymbol{x}\\
&\overset{(d)}{=}\int_{\mathcal{T}}\gamma(t)\mathbb{E}_{\boldsymbol{x}}\left[\mathbb{E}_{Y|\boldsymbol{x},t}\left[Y\ell'_\epsilon(Y|\boldsymbol{x},t;0)\right]\right]p(t)dt
\end{aligned}
\tag{9}
$$

where (a) follows from the fact that $\mathbb{E}_{Y|\boldsymbol{X},T}\ell'_\epsilon(Y|\boldsymbol{X},T;0)=0$, (b) uses iterated expectation, (c) and (d) follows immediately by utilizing the definition of expectations.

Also we have

$$
\begin{aligned}
&\mathbb{E}_{\boldsymbol{X},T,Y}\left(\zeta(Y,\boldsymbol{X},T)\ell'_\epsilon(\boldsymbol{X},T;0)\right)\\
&\overset{(a)}{=}\mathbb{E}_{\boldsymbol{X},T,Y}\left[\left(\gamma(T)\frac{Y-\mu(T,\boldsymbol{X})}{\pi(T\mid\boldsymbol{X})}\int_{\mathcal{X}}\pi(T\mid\boldsymbol{x})d\mathbb{P}(\boldsymbol{x})\right)\ell'_\epsilon(\boldsymbol{X},T;0)\right]\\
&\quad+\mathbb{E}_{\boldsymbol{X},T}\left(\gamma(T)\int_{\mathcal{X}}\mu(T,\boldsymbol{x})d\mathbb{P}(\boldsymbol{x})+\frac{\gamma'_\epsilon(T)}{l'_\epsilon(T;0)}\int_{\mathcal{X}}\mu(T,\boldsymbol{x})d\mathbb{P}(\boldsymbol{x})\right)\left(\ell'_\epsilon(\boldsymbol{X}|T;0)+\ell'_\epsilon(T;0)\right)\\
&\quad+\mathbb{E}_{\boldsymbol{X},T}\left[\left(\int_{\mathcal{T}}\mu(t,\boldsymbol{X})\gamma(t)d\mathbb{P}(t)\right)\left(\ell'_\epsilon(T|\boldsymbol{X};0)+\ell'_\epsilon(\boldsymbol{X};0)\right)\right]\\
&\quad+\mathbb{E}_{\boldsymbol{X},T}\left[\left(-\int_{\mathcal{T}}\gamma(t)\psi(t)d\mathbb{P}(t)-\mathbb{E}_T\left[\frac{\gamma'_\epsilon(T)}{l'_\epsilon(T;0)}\int_{\mathcal{X}}\mu(T,\boldsymbol{x})d\mathbb{P}(\boldsymbol{x})\right]-\Gamma\right)\left(\ell'_\epsilon(T,\boldsymbol{X};0)\right)\right]\\
&\overset{(b)}{=}\mathbb{E}_T\left[\gamma(T)\int_{\mathcal{X}}\mu(T,\boldsymbol{x})d\mathbb{P}(\boldsymbol{x})\ell'_\epsilon(T;0)\right]+\mathbb{E}_T\left[\frac{\gamma'_\epsilon(T)}{l'_\epsilon(T;0)}\int_{\mathcal{X}}\mu(T,\boldsymbol{x})d\mathbb{P}(\boldsymbol{x})\ell'_\epsilon(T;0)\right]\\
&\quad+\mathbb{E}_{\boldsymbol{X}}\left[\int_{\mathcal{T}}\mu(t,\boldsymbol{X})\gamma(t)d\mathbb{P}(t)\ell'_\epsilon(\boldsymbol{X};0)\right]\\
&\overset{(c)}{=}\int_{\mathcal{T}}\gamma(t)\psi(t)\ell'_\epsilon(t;0)p(t)dt+\int_{\mathcal{T}}\mathbb{E}_{\boldsymbol{X}}\left[\mu(t,\boldsymbol{X})\ell'_\epsilon(\boldsymbol{X};0)\right]\gamma(t)d\mathbb{P}(t)+\int_{\mathcal{T}}\gamma'_\epsilon(t)\psi(t)p(t)dt
\end{aligned}
\tag{10}
$$

where (a) follows from the fact that $\ell'_\epsilon(\boldsymbol{X},T;0)=\ell'_\epsilon(\boldsymbol{X}|T;0)+\ell'_\epsilon(T;0)=\ell'_\epsilon(T|\boldsymbol{X};0)+\ell'_\epsilon(\boldsymbol{X};0)$. Equation (b) follows from the fact that $\mathbb{E}_{Y|\boldsymbol{X},T}Y=\mu(T,\boldsymbol{X})$, $\mathbb{E}_{T|\boldsymbol{X}}\ell'_\epsilon(T|\boldsymbol{X};0)=\mathbb{E}_{\boldsymbol{X}|T}\ell'_\epsilon(\boldsymbol{X}|T;0)=\mathbb{E}_{\boldsymbol{X},T}\ell'_\epsilon(\boldsymbol{X},T;0)=0$ and repeated application of iterated expectation. Equation (c) follows from the definition of $\psi(t)=\int_{\mathcal{X}}\mu(t,\boldsymbol{x})d\mathbb{P}(\boldsymbol{x})$.

Comparing equation 9, equation 10 against equation 8, we immediately get $\Gamma'_\epsilon(0)=\mathbb{E}_{\boldsymbol{X},T,Y}\left(\zeta(Y,\boldsymbol{X},T)\ell'_\epsilon(Y,\boldsymbol{X},T;0)\right)$, which implies that $\zeta(Y,\boldsymbol{X},T)$ is indeed an efficient influence function of Γ. □

A.2.6 Proof of Lemma 2

Proof. This proof follows from Huang et al. (2004). Let us start with the following decomposition:

$$\|\hat{\epsilon}_n-\epsilon_n\|_{L^2}\leq\|\epsilon_n-\tilde{\epsilon}_n\|_{L^2}+\|\hat{\epsilon}_n-\tilde{\epsilon}_n\|_{L^2}$$

where $\tilde{\epsilon}_n=\left(\boldsymbol{\varphi}^{K_n}(t)\right)^T\tilde{\boldsymbol{\alpha}}$ where $\tilde{\boldsymbol{\alpha}}=\left(B_n^T\Pi_n^{-2}B_n\right)^{-1}B_n^T\Pi_n^{-2}\tilde{\boldsymbol{R}}_n$. The first term $\|\epsilon_n-\tilde{\epsilon}_n\|_{L^2}$ is the bias and the second term $\|\hat{\epsilon}_n-\tilde{\epsilon}_n\|_{L^2}$ is the variance.

Bound on bias term Let $\boldsymbol{\alpha}^*\in\mathbb{R}^{K_n}$ be such that $\|\left(\boldsymbol{\alpha}^*\right)^T\boldsymbol{\varphi}^{K_n}-\epsilon_n\|_\infty=\inf_{f\in\mathcal{B}_K}\|f-\epsilon_n\|_\infty$. Then we have

$$
\begin{aligned}
\|\epsilon_n-\tilde{\epsilon}_n\|_{L^2}&=\|\epsilon_n-\left(\boldsymbol{\alpha}^*\right)^T\boldsymbol{\varphi}^{K_n}+\left(\boldsymbol{\alpha}^*\right)^T\boldsymbol{\varphi}^{K_n}-\tilde{\epsilon}_n\|_{L^2}\\
&\leq\|\epsilon_n-\left(\boldsymbol{\alpha}^*\right)^T\boldsymbol{\varphi}^{K_n}\|_{L^2}+\|\left(\boldsymbol{\alpha}^*\right)^T\boldsymbol{\varphi}^{K_n}-\tilde{\epsilon}_n\|_{L^2}
\end{aligned}
$$

By definition of $\boldsymbol{\alpha}^*$ and properties of B-spline space, we have a bound on the first term $\|\epsilon_n - (\boldsymbol{\alpha}^*)^T \boldsymbol{\varphi}^{K_n}\|_{L^2} = \mathcal{O}_p(\rho_n)$. Notice that the second term can also be bounded:

$$
\begin{aligned}
&\|(\boldsymbol{\alpha}^*)^T \boldsymbol{\varphi}^{K_n} - \tilde{\epsilon}_n\|_{L^2} \\
\overset{(a)}{\asymp} &\|\boldsymbol{\alpha}^* - \left(B_n^T \Pi_n^{-2} B_n\right)^{-1} B_n^T \Pi_n^{-2} \tilde{\Pi}_n^2 \tilde{\boldsymbol{R}}_n\|_2/\sqrt{K_n} \\
= &\|\left(B_n^T \Pi_n^{-2} B_n\right)^{-1} B_n^T \Pi_n^{-2} \left(B_n \boldsymbol{\alpha}^* - \tilde{\Pi}_n^2 \tilde{\boldsymbol{R}}_n\right)\|_2/\sqrt{K_n} \\
\overset{(b)}{\asymp} &\frac{K_n}{n} \|B_n^T \Pi_n^{-2} \left(B_n \boldsymbol{\alpha}^* - \tilde{\Pi}_n^2 \tilde{\boldsymbol{R}}_n\right)\|_2/\sqrt{K_n} \\
\overset{(c)}{\asymp} &\frac{\sqrt{K_n}}{n} \rho_n \sqrt{\mathbf{1}^T \Pi_n^{-2} B_n^T B_n \Pi_n^{-2} \mathbf{1}} \\
\asymp &\frac{\sqrt{K_n}}{n} \rho_n \sqrt{\sum_{k=1}^{K_n} \left(\sum_{i=1}^{n} \frac{\varphi_k(t_i)}{\hat{\pi}_n(t_i \mid \boldsymbol{x}_i)}\right)^2} \\
\overset{(d)}{\asymp} &\sqrt{K_n} \rho_n \sqrt{\sum_{k=1}^{K_n} \left(\frac{1}{n} \sum_{i=1}^{n} \varphi_k(t_i)\right)^2}
\end{aligned}
\tag{11}
$$

where (a) is from properties of B-spline basis functions, (b) is from Lemma 3, (c) is from properties of B-spline space, (d) is boundedness of $\|\hat{\pi}_n\|_\infty$. Following proof of Lemma A.6 of Huang et al. (2004), we have

$$
\begin{aligned}
&\text{Prob}\left(\sum_{k=1}^{K_n} \left(\frac{1}{n} \sum_{i=1}^{n} \varphi_k(t_i)\right)^2 > a\right) \\
\overset{(a)}{\leq} &\sum_{k=1}^{K_n} \text{Prob}\left(\left|\frac{1}{n} \sum_{i=1}^{n} \varphi_k(t_i)\right| > \sqrt{\frac{a}{K_n}}\right) \\
\leq &\sum_{k=1}^{K_n} \text{Prob}\left(\left|\frac{1}{n} \sum_{i=1}^{n} \varphi_k(t_i) - \mathbb{E}\varphi_k(T)\right| + |\mathbb{E}\varphi_k(T)| > \sqrt{\frac{a}{K_n}}\right) \\
\leq &\sum_{k=1}^{K_n} \text{Prob}\left(\left|\frac{1}{n} \sum_{i=1}^{n} \varphi_k(t_i) - \mathbb{E}\varphi_k(T)\right| > \sqrt{\frac{a}{K_n}} - |\mathbb{E}\varphi_k(T)|\right) \\
\overset{(b)}{\leq} &K_n \exp\left\{-2n\left(\sqrt{a/K_n} - |\mathbb{E}\varphi_k(T)|\right)^2\right\}
\end{aligned}
$$

where (a) uses union bound, (b) follows Hoeffding's Inequality. Since $\mathbb{E}\varphi_k(T) \asymp 1/K_n$, we can pick $a \asymp 1/K_n$ and thus, $\sum_{k=1}^{K_n} \left(\frac{1}{n} \sum_{i=1}^{n} \varphi_k(t_i)\right)^2 = \mathcal{O}_p\left(\frac{1}{K_n}\right)$. Plugging into equation 11, we get

$$
\|(\boldsymbol{\alpha}^*)^T \boldsymbol{\varphi}^{K_n} - \tilde{\epsilon}_n\|_{L^2} = \mathcal{O}_p(\rho_n)
$$

Thus, we can bound the bias term

$$
\|\epsilon_n - \tilde{\epsilon}_n\|_{L^2} = \mathcal{O}_p(\rho_n)
$$

Bound on variance term From properties of B-spline space, we have

$$
\|\hat{\epsilon}_n - \tilde{\epsilon}_n\|_{L^2} \lesssim \|\hat{\boldsymbol{\alpha}} - \tilde{\boldsymbol{\alpha}}\|_2/\sqrt{K_n}
$$

Notice that

$$
\begin{aligned}
&\|\hat{\boldsymbol{\alpha}} - \tilde{\boldsymbol{\alpha}}\|_2 = \|\left(B_n^T \Pi_n^{-2} B_n\right)^{-1} B_n^T \left(\boldsymbol{Z}_n - \Pi_n^{-2} \tilde{\Pi}_n^2 \tilde{\boldsymbol{Z}}_n\right)\|_2 \\
= &\|\left(B_n^T \Pi_n^{-2} B_n\right)^{-1} B_n^T \left(\boldsymbol{Z}_n - \tilde{\boldsymbol{Z}}_n + \tilde{\boldsymbol{Z}}_n - \Pi_n^{-2} \tilde{\Pi}_n^2 \tilde{\boldsymbol{Z}}_n\right)\|_2 \\
\leq &\|\left(B_n^T \Pi_n^{-2} B_n\right)^{-1} B_n^T \left(\boldsymbol{Z}_n - \tilde{\boldsymbol{Z}}_n\right)\|_2 + \|\left(B_n^T \Pi_n^{-2} B_n\right)^{-1} B_n^T \left(\tilde{\boldsymbol{Z}}_n - \Pi_n^{-2} \tilde{\Pi}_n^2 \tilde{\boldsymbol{Z}}_n\right)\|_2
\end{aligned}
\tag{12}
$$

Control of the first term in equation 12:

$$
\begin{aligned}
&\| \left(B_n^T \Pi_n^{-2} B_n\right)^{-1} B_n^T \left(\boldsymbol{Z}_n - \tilde{\boldsymbol{Z}}_n\right) \|_2^2 = \left(\boldsymbol{Z}_n - \tilde{\boldsymbol{Z}}_n\right)^T B_n \left(B_n^T \Pi_n^{-2} B_n\right)^{-2} B_n^T \left(\boldsymbol{Z}_n - \tilde{\boldsymbol{Z}}_n\right) \\
\overset{(a)}{\asymp} &\frac{K_n^2}{n^2} \delta^T B_n B_n^T \delta = \frac{K_n^2}{n^2} \| \sum_{i=1}^n \boldsymbol{\varphi}^{K_n}(t_i)\delta_i \|_2^2 = \frac{K_n^2}{n^2} \sum_{k=1}^{K_n} \left(\sum_{i=1}^n \varphi_k(t_i)\delta_i \right)^2 \\
\leq &K_n^2 \sum_{k=1}^{K_n} \sup_{\hat{\pi},\hat{\mu}} \left(\frac{1}{n} \sum_{i=1}^n \varphi_k(t_i)\delta_i \right)^2
\end{aligned}
\tag{13}
$$

where $\delta \doteq \boldsymbol{Z}_n - \tilde{\boldsymbol{Z}}_n$, (a) is from Lemma 3. By definition we know

$$
\begin{aligned}
\delta_i &= \frac{y_i - \hat{\mu}_n(\boldsymbol{x}_i, t_i)}{\hat{\pi}(t_i \mid \boldsymbol{x}_i)} - \mathbb{P}\left(\frac{Y - \hat{\mu}_n(\boldsymbol{X}, T)}{\hat{\pi}(T \mid \boldsymbol{X})} \mid T = t_i \right) \\
&= \frac{\mu(\boldsymbol{x}_i, t_i) - \hat{\mu}_n(\boldsymbol{x}_i, t_i)}{\hat{\pi}(t_i \mid \boldsymbol{x}_i)} - \mathbb{P}\left(\frac{\mu(\boldsymbol{x}_i, t_i) - \hat{\mu}_n(\boldsymbol{X}, T)}{\hat{\pi}(T \mid \boldsymbol{X})} \mid T = t_i \right) + \frac{v_i}{\hat{\pi}(t_i \mid \boldsymbol{x}_i)} \\
&= u_i + \tilde{v}_i
\end{aligned}
$$

where $u_i = \frac{\mu(\boldsymbol{x}_i, t_i) - \hat{\mu}_n(\boldsymbol{x}_i, t_i)}{\hat{\pi}(t_i|\boldsymbol{x}_i)} - \mathbb{P}\left(\frac{\mu(\boldsymbol{X}, T) - \hat{\mu}_n(\boldsymbol{X}, T)}{\hat{\pi}(T|\boldsymbol{X})} \mid T = t_i \right)$, $\mathbb{E}\left(u_i \mid t_i\right) = 0$ and $\tilde{v}_i = \frac{v_i}{\hat{\pi}(t_i|\boldsymbol{x}_i)}$, $\mathbb{E}\left(\tilde{v}_i \mid t_i, \boldsymbol{x}_i\right) = 0$. Thus, from union bound, we have

$$
\begin{aligned}
&\text{Prob}\left(\sum_{k=1}^{K_n} \sup_{\hat{\pi},\hat{\mu}} \left(\frac{1}{n} \sum_{i=1}^n \varphi_k(t_i)\delta_i \right)^2 > a \right) \\
\leq &\sum_{k=1}^{K_n} \text{Prob}\left(\sup_{\hat{\pi},\hat{\mu}} \left(\frac{1}{n} \sum_{i=1}^n \varphi_k(t_i)\delta_i \right)^2 > \frac{a}{K_n} \right) \\
= &\sum_{k=1}^{K_n} \text{Prob}\left(\sup_{\hat{\pi},\hat{\mu}} \left| \frac{1}{n} \sum_{i=1}^n \varphi_k(t_i)\delta_i \right| > \sqrt{\frac{a}{K_n}} \right) \\
= &\sum_{k=1}^{K_n} \text{Prob}\left(\sup_{\hat{\pi},\hat{\mu}} \left| \frac{1}{n} \sum_{i=1}^n \varphi_k(t_i)(u_i + \tilde{v}_i) \right| > \sqrt{\frac{a}{K_n}} \right) \\
= &\sum_{k=1}^{K_n} \text{Prob}\left(\sup_{\hat{\pi},\hat{\mu}} \left| \frac{1}{n} \sum_{i=1}^n \varphi_k(t_i)u_i \right| > \frac{1}{2}\sqrt{\frac{a}{K_n}} \right) + \sum_{k=1}^{K_n} \text{Prob}\left(\sup_{\hat{\pi},\hat{\mu}} \left| \frac{1}{n} \sum_{i=1}^n \varphi_k(t_i)\tilde{v}_i \right| > \frac{1}{2}\sqrt{\frac{a}{K_n}} \right)
\end{aligned}
\tag{14}
$$

We could bound the first term of equation 14 from Markov Inequality:

$$
\text{Prob}\left(\sup_{\hat{\pi},\hat{\mu}} \left| \frac{1}{n} \sum_{i=1}^n \varphi_k(t_i)u_i \right| > \frac{1}{2}\sqrt{\frac{a}{K_n}} \right) \lesssim \frac{\mathbb{E}\left(\sup_{\hat{\pi},\hat{\mu}} \left| \frac{1}{n} \sum_{i=1}^n \varphi_k(t_i)u_i \right| \right)}{\frac{1}{2}\sqrt{\frac{a}{K_n}}} \overset{(a)}{\asymp} \sqrt{\frac{K_n}{an}}
\tag{15}
$$

where (a) follows from Lemma 4:

$$
\begin{aligned}
\text{Rad}_n((\mathcal{Q} + \mu)\mathcal{U}^{-1}) &\leq \frac{1}{2}(\|\mathcal{Q}\|_\infty + \|\mathcal{U}^{-1}\|_\infty)\left(\text{Rad}_n(\mathcal{Q}) + \text{Rad}_n(\mathcal{U}^{-1})\right) \\
&\leq \frac{1}{2}(\|\mathcal{Q}\|_\infty + \|\mathcal{U}^{-1}\|_\infty)\left(\text{Rad}_n(\mathcal{Q}) + \frac{c^2}{2}\text{Rad}_n(\mathcal{U} - \frac{1}{2c}) + \frac{2c}{n}\right) \\
&= \mathcal{O}(n^{-1/2})
\end{aligned}
$$

Similarly, write $\mathcal{A} = (\mathcal{Q} + \mu)\mathcal{U}^{-1}$, from Lemma 4, we have

$$
\text{Rad}_n(\varphi_k \mathcal{A}) \leq \frac{1}{2}(\|\varphi_k\|_\infty + \|\mathcal{A}\|_\infty)(\text{Rad}_n(\varphi_k) + \text{Rad}_n(\mathcal{A})) = \mathcal{O}(n^{-1/2})
$$

We can bound the second term of equation 14 using union bound:

$$
\begin{aligned}
&\text{Prob}\left(\sup_{\hat{\pi},\hat{\mu}} \left| \frac{1}{n} \sum_{i=1}^n \varphi_k(t_i)\tilde{v}_i \right| > \frac{1}{2}\sqrt{\frac{a}{K_n}} \right) \\
\overset{(a)}{\leq} &\text{Prob}\left(\sup_{\hat{\pi},\hat{\mu}} \left| \frac{1}{n} \sum_{i=1}^n \varphi_k(t_i)\tilde{v}_i \mathbb{I}(|v_i| > M) \right| > \frac{1}{4}\sqrt{\frac{a}{K_n}} \right) + \text{Prob}\left(\sup_{\hat{\pi},\hat{\mu}} \left| \frac{1}{n} \sum_{i=1}^n \varphi_k(t_i)\tilde{v}_i \mathbb{I}(|v_i| \leq M) \right| > \frac{1}{4}\sqrt{\frac{a}{K_n}} \right)
\end{aligned}
\tag{16}
$$

where

$$
\begin{aligned}
&\text{Prob}\left(\sup_{\hat{\pi},\hat{\mu}}\left|\frac{1}{n}\sum_{i=1}^{n}\varphi_k(t_i)\tilde{v}_i\mathbb{I}(|v_i|\leq M)\right|>\frac{1}{4}\sqrt{\frac{a}{K_n}}\right)\\
\lesssim&\frac{\mathbb{E}\sup_{\hat{\pi},\hat{\mu}}\left|\frac{1}{n}\sum_{i=1}^{n}\varphi_k(t_i)/\hat{\pi}(t_i\mid\boldsymbol{x}_i)v_i\mathbb{I}(|v_i|\leq M)\right|}{\sqrt{a/K_n}}\\
\lesssim&\sqrt{\frac{K_n}{n}}\frac{M}{\sqrt{a}}
\end{aligned}
\tag{17}
$$

from Lemma 4.

Also we have

$$
\begin{aligned}
&\text{Prob}\left(\sup_{\hat{\pi},\hat{\mu}}\left|\frac{1}{n}\sum_{i=1}^{n}\varphi_k(t_i)\tilde{v}_i\mathbb{I}(|v_i|>M)\right|>\frac{1}{4}\sqrt{\frac{a}{K_n}}\right)\\
\lesssim&\frac{\mathbb{E}\sup_{\hat{\pi},\hat{\mu}}\left|\frac{1}{n}\sum_{i=1}^{n}\varphi_k(t_i)\tilde{v}_i\mathbb{I}(|v_i|>M)\right|}{\sqrt{a/K_n}}\\
\leq&\frac{\mathbb{E}\sup_{\hat{\pi},\hat{\mu}}\frac{1}{n}\sum_{i=1}^{n}\frac{\varphi_k(t_i)}{\hat{\pi}(t_i|\boldsymbol{x}_i)}|v_i|\mathbb{I}(|v_i|>M)}{\sqrt{a/K_n}}\\
\lesssim&\frac{\mathbb{E}\left[|v|\mathbb{I}(|v|>M)\right]}{\sqrt{a/K_n}}\\
\overset{(a)}{=}&\frac{\int_0^\infty(1-F_W(w))\,dw-\int_{-\infty}^0F_W(w)dw}{\sqrt{a/K_n}}\\
=&\frac{\int_0^\infty\mathbb{P}(|v|\geq\max(M,w))dw}{\sqrt{a/K_n}}\\
\overset{(b)}{\lesssim}&\frac{\int_0^\infty e^{-\sigma[\max(M,w)]^2}dw}{\sqrt{a/K_n}}\\
\leq&\frac{\int_0^\infty e^{-\sigma[M+w]^2}dw}{\sqrt{a/K_n}}\\
\overset{(c)}{\asymp}&\frac{e^{-\sigma M^2}\sqrt{K_n}}{M}\frac{1}{\sqrt{a}}
\end{aligned}
\tag{18}
$$

where (a) uses the formula $\mathbb{E}W=\int_0^\infty(1-F(w))dw-\int_{-\infty}^0F(w)dw$ setting $W=|v|\mathbb{I}(|v|>M)$, (b) utilizes the fact that v follows from sub-Gaussian distribution, (c) uses Mills ratio.

Plugging equation 15, equation 17, equation 18 into equation 14, and taking $M\asymp\sqrt{\log n}$, $a\asymp\frac{K_n\log n}{n}$, we get

$$
\sum_{k=1}^{K_n}\sup_{\hat{\pi},\hat{\mu}}\left(\frac{1}{n}\sum_{i=1}^{n}\varphi_k(t_i)\delta_i\right)^2=\mathcal{O}_p\left(\frac{K_n\log n}{n}\right)
\tag{19}
$$

which, when plugging back into equation 13, gives

$$
\|\left(B_n^T\Pi_n^{-2}B_n\right)^{-1}B_n^T\left(\boldsymbol{Z}_n-\tilde{\boldsymbol{Z}}_n\right)\|_2=\mathcal{O}_p\left(\sqrt{\frac{K_n^3\log n}{n}}\right)
\tag{20}
$$

Control of the second term in equation 13: Notice that each coordinate of $\tilde{\boldsymbol{Z}}_n-\Pi_n^{-2}\tilde{\Pi}_n^2\tilde{\boldsymbol{Z}}_n$ is bounded, thus using similar arguments as that of equation 15, we know that

$$
\|\left(B_n^T\Pi_n^{-2}B_n\right)^{-1}B_n^T\left(\tilde{\boldsymbol{Z}}_n-\Pi_n^{-2}\tilde{\Pi}_n^2\tilde{\boldsymbol{Z}}_n\right)\|_2=\mathcal{O}_p\left(\sqrt{\frac{K_n^3\log n}{n}}\right)
\tag{21}
$$

Combining equation 20 and equation 21 into equation 12, we know that

$$
\|\hat{\boldsymbol{\alpha}}-\tilde{\boldsymbol{\alpha}}\|_2=\mathcal{O}_p\left(\sqrt{\frac{K_n^3\log n}{n}}\right)
$$

and thus,

$$\|\hat{\epsilon}_n - \tilde{\epsilon}_n\|_{L^2} = \mathcal{O}_p\left(\sqrt{\frac{K_n^2 \log n}{n}}\right) \tag{22}$$

Combining the rate on bias and variance term, we get

$$\|\hat{\epsilon}_n - \epsilon_n\|_{L^2} = \mathcal{O}_p\left(\rho_n + \sqrt{\frac{K_n^2 \log n}{n}}\right) = \mathcal{O}_p\left(K_n^{-2} + \frac{K_n\sqrt{\log n}}{\sqrt{n}}\right)$$

which gives

$$\|\hat{\epsilon}_n - \epsilon_n\|_{L^2} = \mathcal{O}_p\left(n^{-1/3}\sqrt{\log n}\right)$$

when taking $K_n = n^{1/6}$. □

A.2.7 Proof of Lemma 3

Proof. Suppose SVD decomposition of $B_n = U\Lambda V^T$ where $U \in \mathbb{R}^{n\times n}$, $\Lambda \in \mathbb{R}^{n\times K}$, $V \in \mathbb{R}^{K\times K}$. From Lemma A.3 of Huang et al. (2004), we know that all diagonal elements of $(K_n/n)\,\Lambda^T\Lambda$ fall between some positive constants. Notice that the eigenvalues of $(K_n/n)\,B_n^T\Pi_n^{-2}B_n$ are the diagonal elements of $(K_n/n)\,\Lambda^T\Pi_n^{-2}\Lambda$. From the upper and lower boundedness of $\hat{\pi}_n$, we can get the desired conclusion. □

A.2.8 Proof of Lemma 4

Proof. Write $\mathcal{F}_3 = \mathcal{F}_1 + \mathcal{F}_2, \mathcal{F}_4 = \mathcal{F}_1 - \mathcal{F}_2$. Notice that $\mathcal{F}_1\mathcal{F}_2 = \{f_1 f_2 : f_1 \in \mathcal{F}_1, f_2 \in \mathcal{F}_2\} = \{\frac{1}{4}(f_1+f_2)^2 - \frac{1}{4}(f_1-f_2)^2 : f_1 \in \mathcal{F}_1, f_2 \in \mathcal{F}_2\} = \frac{1}{4}\mathcal{F}_3^2 - \frac{1}{4}\mathcal{F}_4^2$. Let $h : x \mapsto x^2$, from Bartlett & Mendelson (2002) we know that

$$\text{Rad}_n(\mathcal{F}_3\mathcal{F}_3) = \text{Rad}_n(h \circ \mathcal{F}_3) \le 2\|\mathcal{F}_3\|_\infty \text{Rad}_n(\mathcal{F}_3)$$

Thus,

$$\begin{aligned}
&\text{Rad}_n(\mathcal{F}_1\mathcal{F}_2)\\
=&\text{Rad}_n(\frac{1}{4}\mathcal{F}_3^2 - \frac{1}{4}\mathcal{F}_4^2)\\
\le&\text{Rad}_n(\frac{1}{4}\mathcal{F}_3^2) + \text{Rad}_n(-\frac{1}{4}\mathcal{F}_4^2)\\
\le&\frac{1}{4}\text{Rad}_n(\mathcal{F}_3^2) + \frac{1}{4}\text{Rad}_n(\mathcal{F}_4^2)\\
\le&\frac{1}{2}\|\mathcal{F}_3\|_\infty\text{Rad}_n(\mathcal{F}_3) + \frac{1}{2}\|\mathcal{F}_4\|_\infty\text{Rad}_n(\mathcal{F}_4)\\
\le&\frac{1}{2}(\|\mathcal{F}_3\|_\infty + \|\mathcal{F}_4\|_\infty)(\text{Rad}_n(\mathcal{F}_3) + \text{Rad}_n(\mathcal{F}_4))
\end{aligned}$$

□

A.3 Additional Restuls

This section formally states and proves the efficient influence function of a multidimensional vector, which is briefly mentioned in the main text.

Theorem 3. *The efficient influence function for a d-dimensional vector* $\mathbf{\Gamma} = (\Gamma_1, \Gamma_2, \cdots, \Gamma_p)^T \in \mathbb{R}^d$ *is*

$$\boldsymbol{\zeta}(Y, \boldsymbol{X}, T, \pi, \mu, \mathbf{\Gamma}) = (\zeta_1(Y, \boldsymbol{X}, T, \pi, \mu, \Gamma_1), \zeta_2(Y, \boldsymbol{X}, T, \pi, \mu, \Gamma_2), \cdots, \zeta_d(Y, \boldsymbol{X}, T, \pi, \mu, \Gamma_p))^T \in \mathbb{R}^d$$

where $\zeta_j(Y, \boldsymbol{X}, T, \pi, \mu, \Gamma_j)$ *is the efficient influence function for* Γ_j.

Proof. The efficient influence function $\boldsymbol{\zeta}$ is defined as

$$\mathbb{E}\left[\boldsymbol{\zeta}\left(\frac{dl}{d\boldsymbol{\epsilon}}\mid_{\boldsymbol{\epsilon}=\mathbf{0}}\right)^T\right] = \frac{d\mathbf{\Gamma}}{d\boldsymbol{\epsilon}}\mid_{\boldsymbol{\epsilon}=\mathbf{0}}$$

i.e.,

$$\mathbb{E}\left[\zeta_i\frac{dl}{d\epsilon_j}\mid_{\boldsymbol{\epsilon}=\mathbf{0}}\right] = \frac{d\Gamma_i}{d\epsilon_j}\mid_{\boldsymbol{\epsilon}=\mathbf{0}}$$

the proof of which is identical to the proof for a single ϵ (Section A.2.5). □

A.4 Experimental Details

A.4.1 Network Structure

For all methods, we implement the conditional density estimator as a neural network with two hidden fully connected layers, each consisting of 50 hidden units using ReLU activation. Hidden feature $\boldsymbol{z}$ is defined as the latent representation extracted after the second ReLU activation. We set number of grids $B = 100$. The estimation of $\pi(t \mid \boldsymbol{x})$ is computed as introduced in Section 3. Following Schwab et al. (2019), we use 5 blocks for Dragonnet and DRNet. Structure of prediction head for each block is the same as the prediction head Q for VCNet, except that Dragonnet and DRNet do not use treatment-dependent weights. In VCNet, the prediction head for $\mu(t, \boldsymbol{x})$ is a neural network with two hidden fully connected layers stacking over the hidden feature $\boldsymbol{z}$. Each hidden layer consists of 50 hidden units with ReLU activation. We use B-spline with degree two and two knots placed at $\{1/3, 2/3\}$ (altogether 5 basis). In this way, all methods have the same complexity, i.e., the number of parameters. We also tried different structures and found the relative performance of different methods to be similar. Thus, all reported results below are based on this structure. All networks are trained for 800 epochs.

A.4.2 Parameter Setting

For each dataset we tune parameters based on 20 runs. In each run we simulate data, randomly split into training and testing, and use AMSE on testing data for evaluation. We tune the following parameters. For all methods: network learning rate lr $\in \{0.05, 0.005, 0.001, 0.0005, 0.0001\}$ and $\alpha \in \{1, 0.5\}$. For TR: learning rate for $\epsilon(t)$: $\text{lr}_\epsilon \in \{0.001, 0.0001\}$, $\beta \in \{20, 10, 5\} \times n^{-1/2}$. We found that performance is not sensitive to α. In estimator of $\epsilon(t)$, we use B-spline with degree 2 and tune the number of knots across $\{5, 10, 20\}$ (all equally spaced at $[0, 1]$). For TMLE and doubly robust estimator: we tune parameters of B-spline in the same way as in TR version. During tuning, all networks are trained for 800 epochs.

A.4.3 Dataset

Synthetic Dataset We generate data as follows: $x_j \overset{\text{i.i.d.}}{\sim} \text{Unif}[0, 1]$, where x_j is the j-th dimension of $\boldsymbol{x}$, and

$$\begin{aligned}
\tilde{t} \mid \boldsymbol{x} &= \frac{10\sin(\max(x_1, x_2, x_3)) + \max(x_3, x_4, x_5)^3}{1 + (x_1 + x_5)^2} + \sin(0.5x_3)(1 + \exp(x_4 - 0.5x_3)) \\
&\quad + x_3^2 + 2\sin(x_4) + 2x_5 - 6.5 + \mathcal{N}(0, 0.25) \\
y \mid \boldsymbol{x}, t &= \cos(2\pi(t - 0.5)) \left(t^2 + \frac{4\max(x_1, x_6)^3}{1 + 2x_3^2} \sin(x_4) \right) + \mathcal{N}(0, 0.25)
\end{aligned}$$

where $t = (1 + \exp(-\tilde{t}))^{-1}$. Notice that $\pi(t \mid \boldsymbol{x})$ only depends on x_1, x_2, x_3, x_4, x_5 while $Q(t, \boldsymbol{x})$ only depends on x_1, x_3, x_4, x_6. As discussed in Shi et al. (2019), this allows us to observe the improvement using VCNet when noise covariates exist. Results are reported in Table 1.

IHDP The original semi-synthetic IHDP dataset from Hill (2011) contains binary treatments with 747 observations on 25 covariates. To allow comparison on continuous treatments, we randomly generate treatment and response using:

$$\begin{aligned}
\tilde{t} \mid \boldsymbol{x} &= \frac{2x_1}{(1 + x_2)} + \frac{2\max(x_3, x_5, x_6)}{0.2 + \min(x_3, x_5, x_6)} + 2\tanh\left(5\frac{\sum_{i \in S_{\text{dis},2}} (x_i - c_2)}{|S_{\text{dis},2}|}\right) - 4 + \mathcal{N}(0, 0.25) \\
y \mid \boldsymbol{x}, t &= \frac{\sin(3\pi t)}{1.2 - t} \left(\tanh\left(5\frac{\sum_{i \in S_{\text{dis},1}} (x_i - c_1)}{|S_{\text{dis},1}|}\right) + \frac{\exp(0.2(x_1 - x_6))}{0.5 + 5\min(x_2, x_3, x_5)} \right) + \mathcal{N}(0, 0.25)
\end{aligned}$$

where $t = (1 + \exp(-\tilde{t}))^{-1}$, $S_{\text{con}} = \{1, 2, 3, 5, 6\}$ is the index set of continuous features, $S_{\text{dis},1} = \{4, 7, 8, 9, 10, 11, 12, 13, 14, 15\}$, $S_{\text{dis},2} = \{16, 17, 18, 19, 20, 21, 22, 23, 24, 25\}$ and $S_{\text{dis},1} \cup S_{\text{dis},2} = [25] - S_{\text{con}}$. Here $c_1 = \mathbb{E}\frac{\sum_{i \in S_{\text{dis},1}} x_i}{|S_{\text{dis},1}|}$, $c_2 = \mathbb{E}\frac{\sum_{i \in S_{\text{dis},2}} x_i}{|S_{\text{dis},2}|}$. Notice that all continuous features are useful for $\pi(t \mid \boldsymbol{x})$ and $Q(t, \boldsymbol{x})$ but only $S_{\text{dis},1}$ is useful for Q and only $S_{\text{dis},2}$ is useful for π. Following Hill (2011), covariates are standardized with mean 0 and standard deviation 1 and the generated treatments are normalized to lie between $[0, 1]$. Results are summarized in Table 1.

News The News dataset consists of 5000 randomly sampled news items from the NY Times corpus (Newman, 2008), which was originally introduced as a benchmark in the binary treatment setting (Johansson et al., 2016). We generate the treatment and outcome in a similar way as (Bica et al., 2020). We first generate $\boldsymbol{v}_1'$, $\boldsymbol{v}_2'$ and $\boldsymbol{v}_3'$

from $\mathcal{N}(\mathbf{0}, \mathbf{1})$ and then set $\boldsymbol{v}_i = \boldsymbol{v}_i' / \|\boldsymbol{v}_i'\|_2$ for $i = \{1, 2, 3\}$. Given $\boldsymbol{x}$, we generate t from Beta $\left(2, \left|\frac{\boldsymbol{v}_3^\top \boldsymbol{x}}{2\boldsymbol{v}_2^\top \boldsymbol{x}}\right|\right)$. And we generate the outcome by

$$y' \mid \boldsymbol{x}, t = \exp\left(\frac{\boldsymbol{v}_2^\top \boldsymbol{x}}{\boldsymbol{v}_3^\top \boldsymbol{x}} - 0.3\right)$$
$$y \mid \boldsymbol{x}, t = 2\left(\max(-2, \min(2, y')) + 20\boldsymbol{v}_1^\top \boldsymbol{x}\right) * \left(4\left(t - 0.5\right)^2 * \sin\left(\frac{\pi}{2}t\right)\right) + \mathcal{N}(0, 0.5).$$