LATENT TOPIC CONVERSATIONAL MODELS

Anonymous authors
Paper under double-blind review

ABSTRACT

Despite much success in many large-scale language tasks, sequence-to-sequence (seq2seq) models have not been an ideal choice for conversational modeling as they tend to generate generic and repetitive responses. In this paper, we propose a Latent Topic Conversational Model (LTCM) that augments the seq2seq model with a neural topic component to better model human-human conversations. The neural topic component encodes information from the source sentence to build a global "topic" distribution over words, which is then consulted by the seq2seq model to improve generation at each time step. The experimental results show that the proposed LTCM can generate more diverse and interesting responses by sampling from its learnt latent representations. In a subjective human evaluation, the judges also confirm that LTCM is the preferred option comparing to the baseline models.

1 INTRODUCTION

Sequence-to-Sequence model (seq2seq) (Sutskever et al., 2014), as a data-driven approach to mapping between two arbitrary length sequences, has attracted much attention and been widely applied to many natural language processing tasks such as machine translation (Cho et al., 2014; Luong et al., 2015), syntactic parsing (Vinyals et al., 2015), and summarisation (Nallapati et al., 2016). Neural conversational models (Vinyals & Le, 2015; Shang et al., 2015; Serban et al., 2016a) are the latest development in open-domain conversational modelling, where seq2seq-based models are employed for learning dialogue decisions in an end-to-end fashion. Despite promising results, the lack of explicit knowledge representations (or the inability to learn them from data) impedes the model from generating causal or even rational responses. This leads to many problems discussed in previous literature such as generic responses (Li et al., 2016a), inconsistency (Li et al., 2016b), and redundancy and contradiction (Shao et al., 2017).

On the other hand, goal-oriented dialogues (Young et al., 2013) use the notion of dialogue ontology to constrain the scope of conversation and facilitate rational system behaviour within the domain. Neural network-based task-oriented dialogue systems usually retrieve knowledge from a pre-defined database either by a discrete accessing (Wen et al., 2017b; Bordes & Weston, 2017) or through an attention mechanism (Dhingra et al., 2017). The provision of this database offers a proxy for language grounding, which is crucial to guide the generation or selection of the system responses. As shown in Wen et al. 2017a, a stochastic neural dialogue model can generate diverse yet rational responses mainly because they are heavily driven by the knowledge the model is conditioned on.

Despite the need for explicit knowledge representations, building a general-purpose knowledge base and actually making use of it have been proven difficult (Matuszek et al., 2006; Miller et al., 2016). Therefore, progress has been made in conditioning the seq2seq model on coarse-grained knowledge representations, such as a fuzzily-matched retrieval result via attention (Ghazvininejad et al., 2017) or a set of pre-organised topic or scenario labels (Wang et al., 2017). In this work, we propose a hybrid of a seq2seq conversational model and a neural topic model – Latent Topic Conversational Model (LTCM) – to jointly learn the useful latent representations and the way to make use of them in a conversation. LTCM uses its underlying seq2seq

model to capture the local dynamics of a sentence while extracts and represents its global semantics by a mixture of topic components like topic models (Blei et al., 2003). This separation of global semantics and local dynamics turns out to be crucial to the success of LTCM.

Recent advances in neural variational inference (Mnih & Gregor, 2014; Miao et al., 2016) have sparked a series of latent variable models applied to conversation modeling (Serban et al., 2016b; Cao & Clark, 2017; Zhao et al., 2017). The majority of the work passes a Gaussian random variable to the hidden state of the LSTM decoder and employs the reparameterisation trick (Kingma & Welling, 2014) to build an unbiased and low-variance gradient estimator for updating the model parameters. However, studies have shown that training this type of models for language generation tasks is tough because the effect of the latent variable tends to vanish and the language model would take over the entire generation process over time (Bowman et al., 2015). This results in several workarounds such as KL annealing (Bowman et al., 2015; Cao & Clark, 2017), word dropout and historyless decoding (Bowman et al., 2015), as well as auxiliary bag-of-word signals (Zhao et al., 2017). Unlike previous approaches, LTCM is similar to TopicRNN (Dieng et al., 2017) where it passes the latent variable to the output layer of the decoder and only back-propagates the gradient of the topic words to the latent variable.

In summary, the contribution of this paper is two-fold: first and most importantly, we show that LTCM can learn to generate more diverse and interesting responses by sampling from the learnt topic representations. The results were confirmed by a corpus-based evaluation and a human assessment; secondly, we conducted a series of experiments to understand the properties of seq2seq-based latent variables models better, which may serve as rules of thumb for future model development.

2 BACKGROUND

We present the necessary building blocks of the LTCM model. We first introduce the seq2seq-based conversational model and its latent variable variant, followed by an introduction of the neural topic models.

2.1 SEQ2SEQ CONVERSATIONAL MODEL

In general, a seq2seq model (Sutskever et al., 2014) generates a target sequence given a source sequence using two Recurrent Network Networks (RNN), one for encoding the source, another for decoding the target. Given a *user* input $u = \{x_1, x_2, ...x_U\}$ in the conversational setting, the goal is to produce a *machine* response $m = \{y_1, y_2, ...y_M\}$ that maximises the conditional probability $m^* = \text{argmax}_m \, p(m|u)$. The decoder of the seq2seq model is effectively an RNN language model which measures the likelihood of a sequence through a joint probability distribution,

$$p(m|u) = p(y_1|u) \prod_{t=2}^{M} p(y_t|y_{1:t-1}, u) \tag{1}$$

The conditional probability is then modeled by an RNN,

$$p(y_t|y_{1:t-1}, u) \triangleq p(y_t|\mathbf{h}_t) \tag{2}$$

$$\mathbf{h}_t = f_{\mathbf{W}_h}(y_{t-1}, \mathbf{h}_{t-1}) \tag{3}$$

where $\mathbf{h}_t$ is the hidden state at step t and function $f_{\mathbf{W}_h}(\cdot)$ is the hidden state update that can either be a vanilla RNN cell or a more complex cell like Long Short-term Memory (LSTM) (Hochreiter & Schmidhuber, 1997). The initial state of the decoder $\mathbf{h}_0$ is initialised by a vector representation of the source sentence, which is taken from the last hidden state of the encoder $\mathbf{h}_0 = \hat{\mathbf{h}}_U$. The encoder state update also follows Equation 3.

While theoretically, RNN-based models can memorise arbitrarily long sequences if provided with sufficient capacity, in practice even the improved version such as LSTM or GRU (Chung et al., 2014) encounter

difficulties during optimisation (Bengio et al., 1994). This inability to memorising long-term dependencies prevents the model from extracting useful sentence-level semantics. As a consequence, the model tends to focus on the low-hanging fruit (language modelling) during optimisation and yields a suboptimal result.

2.2 LATENT VARIABLE CONVERSATIONAL MODELS

Latent variable conversational model (Serban et al., 2016b; Cao & Clark, 2017; Zhao et al., 2017) is a derivative of the seq2seq model in which it incorporates a latent variable ν at the sentence-level to inject stochasticity and diversity. The objective function of the latent variable model is

$$p(m|u) = \int_{\nu} p(m|\nu, u)p(\nu|u)d\nu \tag{4}$$

where ν is usually chosen to to be Gaussian distributed and passed to the hidden state of the decoder at every time step, where we rewrite Equation 3 as $\mathbf{h}_t = f_{\mathbf{W}_h}(y_{t-1}, \mathbf{h}_{t-1}, \nu)$. Since the optimisation against Equation 4 is intractable, we apply variational inference and alternatively optimise the variational lowerbound,

$$\begin{aligned} \log p(m|u) &= \log \int_{\nu} p(m|\nu, u)p(\nu|u)d\nu \\ &\geq \mathbb{E}_{q(\nu|u,m)}[\log p(m|\nu, u)] - D_{KL}(q(\nu|u, m)||p(\nu|u)) \end{aligned} \tag{5}$$

where we introduce the inference network $q(\nu|u, m)$, a surrogate of $p(\nu|u)$, to approximate the true posterior during training. Based on Equation 5, we can then sample $\nu \sim q(\nu|u, m)$ and apply the Gaussian reparameterisation trick (Kingma & Welling, 2014) to calculate the gradients and update the parameters.

Although latent variable conversational models were able to generate diverse responses, its optimisation has been proven difficult, and several tricks are needed to obtain a good result. Among these tricks, KL loss annealing is the most general and effective approach (Bowman et al., 2015). The main idea of KL annealing is, instead of optimising the full KL term during training, it is gradually increased using a linear schedule. This way can encourage the model to encode information cheaply in ν without paying huge KL penalty in the early stage of training.

2.3 NEURAL TOPIC MODELS

Probabilistic topic models are a family of models that are used to capture the global semantics of a document set (Srivastava & Sahami, 2009). They can be used as a tool to organise, summarise, and navigate document collections. As an unsupervised approach, topic models rely on counting word co-occurrence in the same document to group words into "topic". Therefore, each topic represents a word cluster which puts most of its mass (weight) on this subset of the vocabulary. Despite there are many probabilistic graphical topic models (Blei et al., 2003), we focus on neural topic models (Larochelle & Lauly, 2012; Miao et al., 2016) because they can be directly integrated into seq2seq model as a submodule of LTCM.

One neural topic model that is similar to LDA is the Gaussian-softmax neural topic model introduced by Miao et al. 2017. The generation process works as following:

1. Draw a document-level latent vector $\nu \sim N(\mu_{\mathbf{0}}, {\sigma_{\mathbf{0}}}^2)$.
2. Construct a document-level topic proportion vector $\theta = \text{softmax}(\mathbf{W}^\top \nu)$.
3. For each word y_t in the document,
   (a) Draw a topic assignment $z_t \sim \text{Multinomial}(\theta)$.
   (b) Draw a word $y_t \sim \text{Multinomial}(\beta_{z_t})$.

where $\beta = \{\beta_1, \beta_2, ...\beta_K\}$, β_k is the word distribution of topic k, and μ_0 and σ_0 are the mean and variance of an isotropic Gaussian. The likelihood of a document $d = \{y_1, y_2, ...y_D\}$ is therefore,

$$p(d) = \int_\theta p(\theta) \prod_{t=1}^{D} \sum_z p(z_t|\theta) p(y_t|\beta_{z_t}) d\theta = \int_\theta p(\theta) \prod_{t=1}^{D} (\theta\beta)_{y_t} d\theta \tag{6}$$

Note in the original LDA both the θ and β are both drawn from a Dirichlet prior. But in the Gaussian-softmax model, θ is constructed from a draw from an isotropic Gaussian with parameters μ_0 and σ_0, while β is random initialised as a parameter of the network.

Like most of the topic models, Gaussian-softmax model makes the bag-of-words assumption where the word order is ignored. This simple assumption sacrifices the ability to model local transitions between words and phrases, in exchange of the capability to capture global semantics. Therefore, although topic model could not be used as a conversational model itself, it is nevertheless a perfect fit as a sentence-level semantic extractor alongside a seq2seq model to improve the global coherence of the generated responses.

3 Latent Topic Conversational Model

Model The proposed Latent Topic Conversational Model (LTCM) is a hybrid of the seq2seq conversational model and the neural topic model, as shown in Figure 1. The neural topic sub-component is responsible for extracting and mapping between the input and output global semantics so that the seq2seq submodule can focus on perfecting local dynamics of the sentence such as syntax and word orderings. Give a user input u and a machine response m, the generative process of LTCM can be described as the following,

1. Encode user prompt u into a vector representation $\mathbf{u} = g_\Gamma(u)$.
2. Draw a sentence-level latent vector $\nu \sim p_\Lambda(\nu|\mathbf{u})$.
3. Construct a sentence-level topic proportion vector $\theta = \text{softmax}(\mathbf{W}_1^\top \nu)$.
4. Initialise decoder hidden state $\mathbf{h}_0 = \hat{\mathbf{h}}_U$, where $\hat{\mathbf{h}}_U$ is the last encoder state.
5. Given $y_{1:t-1}$, for the t-th word y_t in the response,
   (a) Update decoder hidden state $\mathbf{h}_t = f_{\mathbf{W}_h}(y_{t-1}, \mathbf{h}_{t-1})$
   (b) Draw a topic word indicator $l_t \sim \text{Bernoulli}(\text{sigmoid}(\mathbf{W}_2^\top \mathbf{h}_t))$
   (c) Draw a word $y_t \sim p(y_t|\mathbf{h}_t, l_t, \theta; \beta)$, where
   $$p(y_t = i|\mathbf{h}_t, l_t, \theta; \beta) \propto \exp(\mathbf{v}_i^\top \mathbf{h}_t + l_t \cdot \beta_i^\top \theta)$$

where $p(\nu|\mathbf{u}) = N(\mu(\mathbf{u}), \sigma^2(\mathbf{u}))$ is a parametric isotropic Gaussian with a mean and variance both condition on the input prompt $\mu(\mathbf{u}) = \text{MLP}(\mathbf{u})$, $\sigma(\mathbf{u}) = \text{MLP}(\mathbf{u})$. To combine the seq2seq model with the neural topic module, we adopt the TopicRNN style (Dieng et al., 2017) hard decisions by introducing an additional random variable l_t. The topic indicator l_t is to decide whether or not to take the logits of the neural topic module into account. If $l_t = 0$, which indicates that y_t is a stop word, the topic vector θ would have no contribution to the final output. However, if $l_t = 1$, then the topic contribution term $\beta_i^\top \theta$ is added to the output of the seq2seq model, where β_i is the word-topic vector for the i-th vocabulary word. Although the topic word indicator l_t is sampled during inference, during training it is treated as observed and can be produced by either a stop-word list or ranking words in the vocabulary by their inverse document frequencies. This hard decision of l_t is crucial for LTCM because it explicitly sets two gradient routes for the model: when $l_t = 1$ the gradients are back-propagated to the entire network; otherwise, they only flow through the seq2seq model. This is important because topic models are known to be bad at dealing with stop-words (Mimno et al., 2017). Therefore, preventing the topic model to learn from stop-words can help the extraction of

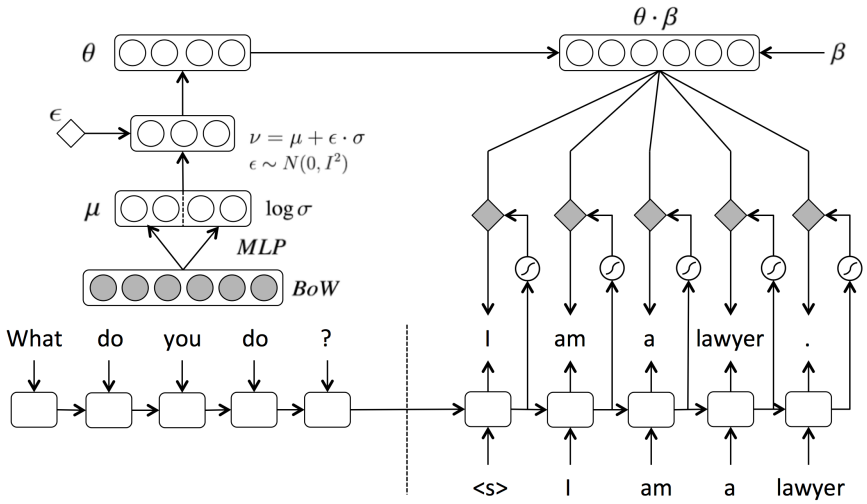

Figure 1: The graphical representation of the Latent Topic Conversational Model. The shaded nodes are observed while the blank nodes are hidden. The circles are neurons in neural network layers, rectangles are the LSTM cells, and the diamonds are stochastic nodes.

global semantics. Finally, the logits of the seq2seq and neural topic model are combined through an additive procedure. This makes the gradient flow more straightforward and the training of LTCM becomes easier[1].

The parameters of LTCM can be denoted as $\Theta = \{\Gamma, \Lambda, \mathbf{W}_1, \mathbf{W}_2, \mathbf{W}_h, \mathbf{V}, \beta\}$ where $\mathbf{V} = \{\mathbf{v}_1, \mathbf{v}_2, ...\mathbf{v}_L\}$ and L is the vocabulary size. During training, the observed variables are input u, output m, and the topic word indicators $l_{1:M}$. The parametric form of LTCM is therefore,

$$p(m, l_{1:M}|u) = \int_\theta p(\theta|u) p(y_{1:M}, l_{1:M}|\theta, u) d\theta = \int_\theta p(\theta|u) \prod_{t=1}^{M} p(y_t|\mathbf{h}_t, l_t, \theta; \beta) p(l_t|\mathbf{h}_t) d\theta \tag{7}$$

Inference As a direct optimisation of Equation 7 is intractable because it involves an integral over the continuous latent space, variational inference (Jordan et al., 1999) is applied to approximate the log-likelihood objective. The variational lowerbound of Equation 7 can therefore be derived as

$$\begin{aligned}\mathcal{L} &= \mathbb{E}_{q(\theta|u,m)} \left[\sum_{t=1}^{M} \log p(y_t|\mathbf{h}_t, l_t, \theta; \beta) + \sum_{t=1}^{M} \log p(l_t|\mathbf{h}_t) \right] - D_{KL}(q(\theta|u,m)||p(\theta|u)) \\ &\leq \int_\theta p(\theta|u) \prod_{t=1}^{M} p(y_t|\mathbf{h}_t, l_t, \theta; \beta) p(l_t|\mathbf{h}_t) d\theta \end{aligned} \tag{8}$$

where $q(\theta|u, m)$ is the inference network introduced during training to approximate the true posterior. The neural variational inference framework (Mnih & Gregor, 2014; Miao et al., 2016) and the Gaussian reparameterisation trick (Kingma & Welling, 2014; Rezende et al., 2014) are then followed to construct $q(\theta|u, m)$,

$$q(\theta|u, m) = \text{softmax}(\mathbf{W}_a^\top \nu'), \nu' \sim N(\nu|\mu(u, m), \sigma^2(u, m)) \tag{9}$$

$$\mu(u, m) = \text{MLP}_{\Omega_1}(u_b, m_b), \sigma(u, m) = \text{MLP}_{\Omega_2}(u_b, m_b) \tag{10}$$

[1]For example, LTCM does not need to be trained with KL annealing to achieve a good performance.

where $\Phi = \{\mathbf{W}_a, \Omega_1, \Omega_2\}$ is the new set of parameters introduced for the inference network, u_b and m_b are the bag-of-words representations for u and m, respectively. Although $q(\theta|u, m)$ and $p(\theta|u)$ are both parameterised as an isotropic Gaussian distribution, the approximation $q(\theta|u, m)$ only functions during training by producing samples to compute the stochastic gradients, while $p(\theta|u)$ is the generative distribution that generates the required topic proportion vectors for composing the machine response.

4 EXPERIMENTS

Dataset We assessed the performance of the LTCM using both a corpus-based evaluation and a human assessment. The dataset used in the experiments is a subset of the data collected by Shao et al. 2017, which includes mainly the Reddit[2] data which contains about 1.7 billion messages (221 million conversations). Given the large volume of the data, a random subset of 15 million single-turn conversations was selected for this experiment. To process the Reddit data, where the messages belonging to the same post are organized as a tree, a single-turn conversation is extracted merely by treating each parent node as a prompt and its corresponding child nodes as responses. A length of 50 words was set for both the source and target sequences during preprocessing. Sentences with any non-Roman alphabet were also removed. This filters out around 40% to 50% of the examples. A few standardizations were made via regular expressions such as mapping all valid numbers to <number> and web URLs to <url>. A vocabulary size of 30K was set for encoder, decoder, and the neural topic component.

Model The LTCM model was implemented on the publicly available NMT[3] code base (Luong et al., 2017). Three model types were compared in the experiments, the vanilla seq2seq conversational model (S2S) (Vinyals & Le, 2015), the latent variable conversational model (LV-S2S) (Serban et al., 2016b; Cao & Clark, 2017), and the Latent Topic Conversational Model (LTCM). For all the seq2seq components, a 4-layer LSTM with 500 hidden units was used for both the encoder and decoder. We used the GNMT style encoder (Wu et al., 2016) where the first two layers are a bidirectional LSTM, while the last two layers are unidirectional. Residual connections were used (He et al., 2016) to ease the optimisation of deep networks. Layer Normalisation (Ba et al.) was applied to all the LSTM cells to facilitate learning. The batch size was 128, and a dropout rate of 0.2 was used. The Adam optimiser (Kingma & Ba, 2014) with a fixed annealing schedule was used to update the parameters. For the latent variable conversational model, we explored the KL annealing strategy as suggested in Bowman et al. 2015 where the KL loss is linearly increased and reaches to the full term after one training epoch. In LTCM, the 300 words with the highest inverse document frequency were selected as stop words and the rest were treated as topic words. Both the mutual angular regularisation (Xie et al., 2016) and the l2 regularisation were applied to the β matrix during training.

Evaluation and Decoding To build the development and testing sets, additional 20K sentence pairs were extracted and divided evenly. For evaluation, five metrics were reported: the approximated perplexity, the variational lowerbound, the KL loss, the sentence uniqueness and the Zipf coefficient (Cao & Clark, 2017) of the generated responses. Because the exact perplexity of the latent variable models is hard to assess due to sampling, an approximated perplexity is reported as suggested in Dieng et al. 2017. For latent variable conversational models the approximate distribution for computing perplexity is $p(y_t|y_{1:t-1}, u) = \prod_t p(y_t|\mathbf{h}_t, \hat{\nu})$, where $\hat{\nu}$ is the mean estimate of ν. While for LTCM it is

$$p(y_t|y_{1:t-1}, u) = \prod_t p(y_t|\mathbf{h}_t, l_t, \hat{\theta}; \beta)p(l_t|\mathbf{h}_t) \tag{11}$$

where again $\hat{\theta}$ is the mean estimate of θ. Both latent variable model and LTCM used greedy decoding to make sure the diversity they produce comes from the latent variable. For seq2seq model, however, we

[2]Available at https://goo.gl/9gKEbc.

[3]Available at https://github.com/tensorflow/nmt

Model	ppx	lowerbound	kl	unique(%)	zipf
S2S, greedy	46.26	69.20	0.00	2.65	1.139
S2S, sample				96.73	1.070
LV-S2S, $p(\nu)$	46.10	69.14	39.11	3.27	1.140
LV-S2S, $p(\nu\|u)$	45.99	69.10	39.09	3.07	1.135
LV-S2S, $p(\nu\|u)$, +A	47.54	78.01	47.74	42.62	1.126
LTCM, $p(\theta)$	95.19	91.18	55.47	50.34	1.113
LTCM, $p(\theta\|u)$	**45.24**	89.17	59.29	**54.08**	1.111
LTCM, $p(\theta\|u)$, +V	45.47	85.89	55.97	48.83	1.122

Table 1: Result of the corpus-based evaluation. $p(\nu)$ or $p(\theta)$ means the model samples from a gaussian prior, while $p(\nu|u)$ or $p(\theta|u)$ means the model samples from a gaussian conditional distribution. +A indicates the model is trained with KL annealing, while +V means the model has a larger stop word vocabulary (500).

explored both the greedy and random sampling strategies. Given a prompt, each model was requested to generate five responses. This leads to 50K generated responses for the testing set. The sentence uniqueness score and Zipf coefficient[4], which were introduced both by Cao & Clark 2017 as proxies to evaluate sentence and lexicon diversity respectively, were computed on the generated responses.

4.1 Corpus-based Evaluation Result

The result of the corpus-based evaluation is presented in Table 1. The first block shows the performance of the baseline seq2seq model, either by greedy decoding or random sampling. Unsurprisingly, *S2S-sample* can generate much more diverse responses than *S2S-greedy*. However, these responses are not of high quality as can be seen in the human assessment in the next section. One interesting observation is that the sentence uniqueness score of *S2S-greedy* is much lower than the expected (2.65%$<$ 20%[5]). This echoes the generic response problem mentioned in previous works (Li et al., 2016a; Serban et al., 2016b). The second block demonstrates the result of the latent variable conversational models. As can be seen, neither sampling from a prior (*LV-S2S,* $p(\nu)$) nor a conditional (*LV-S2S,* $p(\nu|u)$) helps to beat the performance of the seq2seq model. Although both models perform equally well in terms of perplexity and lowerbound, the likewise low uniqueness scores as seq2seq indicate that both of their latent variables collapse into a single mode and do not encode much information. This was also observed in Zhao et al. 2017 when training seq2seq-based latent variable models. The KL annealed model *LV-S2S,* $p(\nu|u)$*, +A*, as suggested by Bowman et al. 2015, can help to mitigate this problem and achieve a much higher uniqueness score (42.6%).

The third block shows the result of the LTCM models. As can be seen, LTCM trades in its KL loss and variational lowerbound in exchange for a higher response diversity (higher uniqueness score and lower Zipf). Interestingly, although the lowerbound was substantially worse than the baselines, the conditional LTCM models (*LTCM,* $p(\theta|u)$ and *LTCM,* $p(\theta|u)$*, +V*) can still reach comparable perplexities. This indicates that most of the additional loss incurred by LTCM was to encode the discourse-level diversity into the latent variable and therefore may not be a bad idea. Given that the latent variable of LTCM can encode more useful information, sampling from a conditional can therefore better tailor the neural topic component to the user prompt and produce more relevant responses (*LTCM,* $p(\theta)$ v.s. *LTCM,* $p(\theta|u)$). Overall speaking, LTCM can generate more diverse responses comparing to baselines by encoding more information into the latent space. However, the slightly higher lowerbound and KL loss do not necessarily mean that the quality of the responses is worse. More discussions follow in the next section.

[4]Note, a higher sentence uniqueness and a lower Zipf coefficient indicates that the result is more diverse.

[5]A deterministic model which is forced to decode the same prompt five times should ideally reach 20% uniqueness.

Model	S2S, greedy	S2S, sample	LV-S2S, $p(\nu\|u)$ +A	LTCM, $p(\theta\|u)$
Interestingness	3.43 (3.43)	3.80 (3.00)	3.90 (3.41)	3.97 (3.37)
Appropriateness	3.53 (3.53)	3.68 (2.76)	3.96 (3.41)	4.04 (3.36)

Table 2: Quality assessment. Both metrics were rated from 1 to 5. The numbers inside the brackets are computed by averaging the mean of the generated responses across prompts, while the ones outside the brackets are the average of the maximum scores across prompts.

Preference (%)	S2S, greedy	S2S, sample	LV-S2S, $p(\nu\|u)$, +A	LTCM, $p(\theta\|u)$
S2S, greedy	-	48.2	39.3	33.3
S2S, sample	51.8	-	36.9	38.8
LV-S2S, $p(\nu\|u)$, +A	60.7	63.1	-	40.0
LTCM, $p(\theta\|u)$	66.7*	61.2*	60.0	-

Table 3: Pairwise preference assessment. Note the numbers are the percentage of wins when comparing models in the first column with the ones in first row. $*p < 0.05$

4.2 Human Evaluation

Due to the difficulty in evaluating conversational agents (Liu et al., 2016; Wen et al., 2015), a human evaluation is usually necessary to assess the performance of the models. To do a less biased evaluation, a set of judges were recruited on AMT. For each task (a prompt), two randomly selected models were paired, where each of them was asked to generate five responses given the prompt. To consider the response diversity, each judge was asked to rate each of the five generated response from 1 to 5 based on the *interestingness* and *appropriateness* scores. The quality assessment is shown in Table 2. The numbers inside the brackets are calculated by averaging the mean of the generated responses across prompts, while the ones outside the brackets are the average of the maximum scores across prompts. Moreover, at the end of the task, the judge was also asked to state a preference between the two systems. The result is shown in Table 3.

Table 2 shows that the average scores (numbers inside the brackets) of *S2S-greedy*, *LV-S2S,* $p(\nu|u)$*, +A*, and *LTCM,* $p(\theta|u)$ are pretty much the same (with the *appropriateness* of *S2S-greedy* slightly better). However, the maximum scores (numbers outside the brackets) show that LTCM is the best among the four (*interestingness*: 3.97 and *appropriateness*: 4.04). This indicates that although LTCM can generate pretty good responses, it could also produce sentences that are quite bad. This variance in response quality could be beneficial if reinforcement learning is introduced to fine-tune the latent variable (Wen et al., 2017a). Table 3 shows the result of pairwise preference test between four models. As can be seen, LTCM is the preferred option for most of the judges when is compared to other approaches. For qualitative analysis and example comparisons of the generated responses, please refer to Appendix A.

5 Conclusion

In this paper, we have proposed the Latent Topic Conversational Model (LTCM) for general-purpose conversational modeling. We have shown that LTCM can generate more interesting and diverse responses by combining the seq2seq model and neural topic model so that global semantic representations and local word transitions can be modeled separately but learned jointly. Both a corpus-based evaluation and a human assessment confirm this finding. Future work would be to study the learned representations and use them to control the meaning of the generated responses.

REFERENCES

Jimmy L. Ba, Jamie R. Kiros, and Geoffrey E. Hinton. Layer Normalization.

Yoshua Bengio, Patrice Simard, and Paolo Frasconi. Learning long-term dependencies with gradient descent is difficult. *Neural Networks, IEEE Transactions on*, 1994.

David M. Blei, Andrew Y. Ng, and Michael I. Jordan. Latent dirichlet allocation. *Journal of Machine Learning Research*, 3:993–1022, March 2003. ISSN 1532-4435.

Antoine Bordes and Jason Weston. Learning end-to-end goal-oriented dialog. In *ICLR*, 2017.

Samuel R. Bowman, Luke Vilnis, Oriol Vinyals, Andrew M. Dai, Rafal Józefowicz, and Samy Bengio. Generating sentences from a continuous space. *arXiv preprint:*, 2015.

Kris Cao and Stephen Clark. Latent variable dialogue models and their diversity. In *EACL*, 2017.

Kyunghyun Cho, Bart van Merrienboer, Caglar Gulcehre, Dzmitry Bahdanau, Fethi Bougares, Holger Schwenk, and Yoshua Bengio. Learning phrase representations using rnn encoder–decoder for statistical machine translation. In *EMNLP*, pp. 1724–1734, Doha, Qatar, October 2014. Association for Computational Linguistics.

Junyoung Chung, Çaglar Gülçehre, KyungHyun Cho, and Yoshua Bengio. Empirical evaluation of gated recurrent neural networks on sequence modeling. *CoRR*, abs/1412.3555, 2014.

Bhuwan Dhingra, Lihong Li, Xiujun Li, Jianfeng Gao, Yun-Nung Chen, Faisal Ahmed, and Li Deng. Towards end-to-end reinforcement learning of dialogue agents for information access. In *ACL*. Association for Computational Linguistics, July 2017.

Adji B. Dieng, Jianfeng Gao Chong Wang, and John Paisley. Topicrnn: A recurrent neural network with long-range semantic dependency. *ICLR*, 2017.

Marjan Ghazvininejad, Chris Brockett, Ming-Wei Chang, Bill Dolan, Jianfeng Gao, Wen-tau Yih, and Michel Galley. A knowledge-grounded neural conversation model. *CoRR*, abs/1702.01932, 2017.

K. He, X. Zhang, S. Ren, and J. Sun. Deep residual learning for image recognition. In *2016 IEEE Conference on Computer Vision and Pattern Recognition (CVPR)*, pp. 770–778, June 2016.

Sepp Hochreiter and Jürgen Schmidhuber. Long short-term memory. *Neural Computation*, 1997.

Michael I. Jordan, Zoubin Ghahramani, Tommi S. Jaakkola, and Lawrence K. Saul. An introduction to variational methods for graphical models. *Machine Learning*, 37(2):183–233, November 1999. ISSN 0885-6125.

Diederik P. Kingma and Jimmy Ba. Adam: A method for stochastic optimization. *arXiv preprint: 1412.6980*, abs/1412.6980, 2014.

Diederik P. Kingma and Max Welling. Stochastic backpropagation and approximate inference in deep generative models. In *ICML*, 2014.

Hugo Larochelle and Stanislas Lauly. A neural autoregressive topic model. In *NIPS*, pp. 2708–2716. Curran Associates, Inc., 2012.

Jiwei Li, Michel Galley, Chris Brockett, Jianfeng Gao, and Bill Dolan. A diversity-promoting objective function for neural conversation models. In *NAACL-HLT*, pp. 110–119, San Diego, California, June 2016a. Association for Computational Linguistics.

Jiwei Li, Michel Galley, Chris Brockett, Georgios Spithourakis, Jianfeng Gao, and Bill Dolan. A persona-based neural conversation model. In *ACL*, pp. 994–1003, Berlin, Germany, August 2016b. Association for Computational Linguistics.

Chia-Wei Liu, Ryan Lowe, Iulian Serban, Mike Noseworthy, Laurent Charlin, and Joelle Pineau. How not to evaluate your dialogue system: An empirical study of unsupervised evaluation metrics for dialogue response generation. In *EMNLP*, pp. 2122–2132, Austin, Texas, November 2016. Association for Computational Linguistics.

Minh-Thang Luong, Ilya Sutskever, Quoc V. Le, Oriol Vinyals, and Wojciech Zaremba. Addressing the rare word problem in neural machine translation. In *ACL*, pp. 11–19, Beijing, China, July 2015. Association for Computational Linguistics.

Minh-Thang Luong, Eugene Brevdo, and Rui Zhao. Neural machine translation (seq2seq) tutorial. *https://github.com/tensorflow/nmt*, 2017.

Cynthia Matuszek, John Cabral, Michael Witbrock, and John Deoliveira. An introduction to the syntax and content of Cyc. In *Proceedings of the 2006 AAAI Spring Symposium on Formalizing and Compiling Background Knowledge and Its Applications to Knowledge Representation and Question Answering*, pp. 44–49, 2006.

Yishu Miao, Lei Yu, and Phil Blunsom. Neural variational inference for text processing. In *ICML*, 2016.

Yishu Miao, Edward Grefenstette, and Phil Blunsom. Discovering discrete latent topics with neural variational inference. In *ICML*, volume 70 of *Proceedings of Machine Learning Research*, pp. 2410–2419. PMLR, 2017.

Alexander Miller, Adam Fisch, Jesse Dodge, Amir-Hossein Karimi, Antoine Bordes, and Jason Weston. Key-value memory networks for directly reading documents. In *EMNLP*, pp. 1400–1409, Austin, Texas, November 2016. Association for Computational Linguistics.

David M. Mimno, Alexandra Schofield, and Måns Magnusson. Pulling out the stops: Rethinking stopword removal for topic models. In *EACL*, 2017.

Andriy Mnih and Karol Gregor. Neural variational inference and learning in belief networks. In *ICML*, 2014.

Ramesh Nallapati, Bowen Zhou, Cícero Nogueira dos Santos, aglar Gülehre, and Bing Xiang. Abstractive text summarization using sequence-to-sequence rnns and beyond. In *CoNLL*, 2016.

Danilo J. Rezende, Shakir Mohamed, and Daan Wierstra. Stochastic backpropagation and approximate inference in deep generative models. In *ICML*, 2014.

Iulian V. Serban, Alessandro Sordoni, Yoshua Bengio, Aaron Courville, and Joelle Pineau. Building end-to-end dialogue systems using generative hierarchical neural network models. In *AAAI*, AAAI'16, pp. 3776–3783. AAAI Press, 2016a.

Iulian V. Serban, Alessandro Sordoni, Ryan Lowe, Laurent Charlin, Joelle Pineau, Aaron Courville, and Yoshua Bengio. A hierarchical latent variable encoder-decoder model for generating dialogues. *arXiv preprint: 1605.06069*, 2016b.

Lifeng Shang, Zhengdong Lu, and Hang Li. Neural responding machine for short-text conversation. In *ACL*, 2015.

Yuanlong Shao, Stephan Gouws, Denny Britz, Anna Goldie, Brian Strope, and Ray Kurzweil. Generating high-quality and informative conversation responses with sequence-to-sequence models. In *EMNLP*, pp. 2200–2209, Copenhagen, Denmark, September 2017. Association for Computational Linguistics.

Ashok N. Srivastava and Mehran Sahami. *Text Mining: Classification, Clustering, and Applications*. Chapman & Hall/CRC Data Mining and Knowledge Discovery Series. CRC Press, 2009.

Ilya Sutskever, Oriol Vinyals, and Quoc V. Le. Sequence to sequence learning with neural networks. In *NIPS*, 2014.

Oriol Vinyals and Quoc V. Le. A neural conversational model. In *ICML Deep Learning Workshop*, 2015.

Oriol Vinyals, Lukasz Kaiser, Terry Koo, Slav Petrov, Ilya Sutskever, and Geoffrey E. Hinton. Grammar as a foreign language. In *NIPS*, pp. 2773–2781, 2015.

Di Wang, Nebojsa Jojic, Chris Brockett, and Eric Nyberg. Steering output style and topic in neural response generation. In *EMNLP*, pp. 2130–2140, Copenhagen, Denmark, September 2017. Association for Computational Linguistics.

Tsung-Hsien Wen, Milica Gasic, Nikola Mrkšić, Pei-Hao Su, David Vandyke, and Steve Young. Semantically conditioned lstm-based natural language generation for spoken dialogue systems. In *EMNLP*, pp. 1711–1721, Lisbon, Portugal, September 2015. Association for Computational Linguistics.

Tsung-Hsien Wen, Yishu Miao, Phil Blunsom, and Steve Young. Latent intention dialogue models. In Doina Precup and Yee Whye Teh (eds.), *ICML*, volume 70 of *Proceedings of Machine Learning Research*, pp. 3732–3741, Sydney, Australia, 06–11 Aug 2017a. PMLR.

Tsung-Hsien Wen, David Vandyke, Nikola Mrkšić, Milica Gašić, Lina M. Rojas-Barahona, Pei-Hao Su, Stefan Ultes, and Steve Young. A network-based end-to-end trainable task-oriented dialogue system. In *EACL*, 2017b.

Yonghui Wu, Mike Schuster, Zhifeng Chen, Quoc V. Le, Mohammad Norouzi, Wolfgang Macherey, Maxim Krikun, Yuan Cao, Qin Gao, Klaus Macherey, Jeff Klingner, Apurva Shah, Melvin Johnson, Xiaobing Liu, Lukasz Kaiser, Stephan Gouws, Yoshikiyo Kato, Taku Kudo, Hideto Kazawa, Keith Stevens, George Kurian, Nishant Patil, Wei Wang, Cliff Young, Jason Smith, Jason Riesa, Alex Rudnick, Oriol Vinyals, Greg Corrado, Macduff Hughes, and Jeffrey Dean. Google's neural machine translation system: Bridging the gap between human and machine translation. *CoRR*, abs/1609.08144, 2016.

Pengtao Xie, Jun Zhu, and Eric Xing. Diversity-promoting bayesian learning of latent variable models. In Maria Florina Balcan and Kilian Q. Weinberger (eds.), *Proceedings of The 33rd International Conference on Machine Learning*, volume 48 of *Proceedings of Machine Learning Research*, pp. 59–68, New York, New York, USA, 20–22 Jun 2016. PMLR.

Steve Young, Milica Gašić, Blaise Thomson, and Jason D. Williams. Pomdp-based statistical spoken dialog systems: A review. *Proceedings of the IEEE*, 2013.

Tiancheng Zhao, Ran Zhao, and Maxine Eskenazi. Learning discourse-level diversity for neural dialog models using conditional variational autoencoders. In *ACL*, pp. 654–664, Vancouver, Canada, July 2017. Association for Computational Linguistics.

A EXAMPLE RESPONSES

Model	Responses
Prompt: what do you think about messi ?	
S2S	i think he 's a good player .
LV-S2S+A	he 's a fantastic player , but he 's not a good player .
	he 's a great player , but he 's not a good player .
	he 's a great player , but he needs to be more consistent .
LTCM	i love him .
	i think he 's a good player , but i feel like he 's a bit overrated .
	i think he 's a great player , but i do not think messi deserves to play for the rest of the season .
	i think messi is the best .
Prompt: what is the purpose of existence ?	
S2S	to create a universe that is not a universe .
LV-S2S+A	to be able to understand what you are saying .
LTCM	to be a <unk> .
	to be able to see the world .
	to be able to see things .
	to make it better .
Prompt: what is the purpose of living ?	
S2S	to make people happy .
LV-S2S+A	to be able to do things that are not in the way of life .
LTCM	to live .
	to live . life is short .
	to live forever .
	to live forever without fear of death .
Prompt: What is the purpose of dying?	
S2S	Dying
LV-S2S+A	The fact that you are not a doctor .
	The fact that you are not alone is not a good thing .
LTCM	To die .
	To make it a better life .
	To make it a reality .
Prompt: what do you think about tesla ?	
S2S	i think it 's a great idea .
LV-S2S+A	i think it 's a good idea .
	i think it 's a good idea . . .
	i think it 's really cool .
LTCM	i love tesla .
	i think it 's a great idea .
	i think it 's pretty cool . tesla is a great company .
	tesla cars are awesome .
	tesla is a great company .

Table 4: Example comparisons of the three models: *S2S-greedy*, *LV-S2S,* $p(\nu|u)$*, +A*, and *LTCM,* $p(\theta|u)$. The result is produced by removing duplicated sentences from the five generated responses.

Model	Responses
Prompt: What is your job ?	
S2S	i'm a <unk> .
LV-S2S+A	i'm a <unk> .
LTCM	i 'm a software engineer . i 'm working on building a new computer .
	i 'm a software engineer . i spend most of my summer time working on my computer and computer .
	i enjoy working at mcdonalds .
	working on a project management company .
Prompt: If you can change one thing about your country, what would you change ?	
S2S	i 'd be happy to be a dictator .
LV-S2S+A	i 'd make a lot of money and make money off of it .
LTCM	i would not be able to change my country .
	i would not be able to change my mind .
	i would vote republican .
	mandatory healthcare reform .
Prompt: If you can change one thing about your country, what would you change ?	
S2S	i 'd be happy to be a dictator .
LV-S2S+A	i 'd make a lot of money and make money off of it .
LTCM	i would not be able to change my country .
	i would not be able to change my mind .
	i would vote republican .
	mandatory healthcare reform .
Prompt: what movie do you find hilarious but no one else does ?	
S2S	the big lebowski .
LV-S2S+A	the <unk> .
	the hangover
	the hangover . it 's really funny .
LTCM	anything involving nicolas cage .
	anything with a twist .
	anything with nicholas cage .
	the godfather .
Prompt: what kind of operating system you are using ?	
S2S	<unk>
LV-S2S+A	<unk> .
	ubuntu .
LTCM	i 'm a <unk> .
	i 'm a linux user .
	i use <unk> <smile>
	linux .
	ubuntu linux .
Prompt: i created the universe ! give me the gift certificate !	
S2S	i 'm not sure if i should be happy or sad .
LV-S2S+A	i always get really excited when i see this .
	i hope he 's okay .
	i need to get a job .
	i really like this . thanks for sharing .
	i want to see this .
LTCM	i love this .
	oh god , i love this guy .
	oh my god , i love this .
	oh my god , i love this guy .
	oh my god , yes !

Table 5: Mode examples.