DNN FEATURE MAP COMPRESSION USING LEARNED REPRESENTATION OVER GF(2)

Anonymous authors
Paper under double-blind review

ABSTRACT

In this paper, we introduce a method to compress intermediate feature maps of deep neural networks (DNNs) to decrease memory storage and bandwidth requirements during inference. Unlike previous works, the proposed method is based on converting fixed-point activations into vectors over the smallest GF(2) finite field followed by nonlinear dimensionality reduction (NDR) layers embedded into a DNN. Such an end-to-end learned representation finds more compact feature maps by exploiting quantization redundancies within the fixed-point activations along the channel or spatial dimensions. We apply the proposed network architecture to the tasks of ImageNet classification and KITTI object detection. When combined with conventional methods, the conducted experiments show two orders of magnitude decrease in memory requirements while adding only bitwise computations.

1 INTRODUCTION

Recent achievements of deep neural networks (DNNs) make them an attractive choice in many computer vision applications including image classification (He et al., 2015) and object detection (Huang et al., 2017). The memory and computations required for DNNs can be excessive for low-power deployments. In this paper, we explore the task of minimizing the memory footprint of DNN feature maps during inference and, more specifically, finding a network architecture that uses minimal storage without introducing a considerable amount of additional computations or on-the-fly heuristic encoding-decoding schemes. In general, the task of feature map compression is tightly connected to an input sparsity. The input sparsity can determine several different usage scenarios. This may lead to substantial decrease in memory requirements and overall inference complexity. First, a pen sketches are spatially sparse and can be processed efficiently by recently introduced submanifold sparse CNNs (Graham & van der Maaten, 2017). Second, surveillance cameras with mostly static input contain temporal sparsity that can be addressed by Sigma-Delta networks (O'Connor & Welling, 2017). A more general scenario presumes a dense input e.g. video frames from a high-resolution camera mounted on a moving autonomous car. In this work, we address the latter scenario and concentrate on feature map compression in order to minimize memory footprint and bandwidth during DNN inference which might be prohibitive for high-resolution cameras.

We propose a method to convert intermediate fixed-point feature map activations into vectors over the smallest finite field called the Galois field of two elements (GF(2)) or, simply, binary vectors followed by compression convolutional layers using a nonlinear dimensionality reduction (NDR) technique embedded into DNN architecture. The compressed feature maps can then be projected back to a higher cardinality representation over a fixed-point (integer) field using decompression convolutional layers. Using a layer fusion method, only the compressed feature maps need to be kept for inference while adding only computationally inexpensive bitwise operations. Compression and decompression layers over GF(2) can be repeated within the proposed network architecture and trained in an end-to-end fashion. In brief, the proposed method resembles autoencoder-type (Hinton & Salakhutdinov, 2006) structures embedded into a base network that work over GF(2). Binary conversion and compression-decompression layers are implemented in the Caffe (Jia et al., 2014) framework and publicly available[1].

[1] GitHub link will be provided

The rest of the paper is organized as follows. Section 2 reviews related work. Section 3 gives notation for convolutional layers, describes conventional fusion and NDR methods, and explains the proposed method including details about network training and the derived architecture. Section 4 presents experimental results on ImageNet classification and KITTI object detection using Faster-RCNN (Ren et al., 2015), memory requirements, and obtained compression rates.

2 RELATED WORK

Feature Map Compression using Quantization. There is a large number of works on weight compression (LeCun et al., 1990; Han et al., 2016), but surprisingly few papers consider feature map compression. This can most likely be explained by the fact that feature maps have to be compressed for every network input as opposed to offline weight compression. Previous feature map compression methods are primarily developed around the idea of representation *approximation* using a certain quantization scheme: fixed-point quantization (Courbariaux et al., 2015; Gysel et al., 2016), binary quantization (Hubara et al., 2016; Rastegari et al., 2016; Zhou et al., 2016; Tang et al., 2017), and power-of-two quantization (Miyashita et al., 2016). The base floating-point network is converted to the approximate quantized representation and, then, the quantized network is retrained to restore accuracy. Such methods are inherently limited in finding more compact representations since the base architecture remains unchanged. For example, the dynamic fixed-point scheme typically requires around 8-bits of resolution to achieve baseline accuracy for state-of-the-art network architectures. At the same time, binary networks experience significant accuracy drops for large-scale datasets or compact (not over-parametrized) network architectures. Instead, our method can be considered in a narrow sense as a learned quantization using binary representation.

Embedded NDR Layers. Another interesting approach is implicitly proposed by Iandola et al. (2016). Although the authors emphasized weight compression rather than feature map compression, they introduced NDR-type layers into network architecture that allowed to decrease not only the number of weights but also feature map sizes by a factor of 8, if one keeps only the outputs of so-called "squeeze" layers. The latter is possible because such network architecture does not introduce any additional convolution *recomputations* since "squeeze" layer computations with a 1×1 kernel can be fused with the preceding "expand" layers. Our work goes beyond this approach by extending NDR-type layers to work over GF(2) to find a more compact feature map representation.

Hardware Accelerator Architectures. Horowitz (2014) estimated that off-chip DRAM access requires approximately $100\times$ more power than local on-chip cache access. Therefore, currently proposed DNN accelerator architectures propose various schemes to decrease memory footprint and bandwidth. One obvious solution is to keep only a subset of intermediate feature maps at the expense of recomputing convolutions (Alwani et al., 2016). The presented fusion approach seems to be oversimplified but effective due to high memory access cost. Our approach is complementary to this work but proposes to keep only compressed feature maps with minimum additional computations.

Another recent work (Parashar et al., 2017) exploits weight and feature map sparsity using a more efficient encoding for zeros. While this approach targets similar goals, it requires having high sparsity, which is often unavailable in the first and the largest feature maps. In addition, a special control and encoding-decoding logic decrease the benefits of this approach. In our work, compressed feature maps are stored in a dense form without the need of special control and enconding-decoding logic.

3 FEATURE MAP COMPRESSION METHODS

3.1 MODEL AND NOTATION

The input feature map of lth convolutional layer in commonly used DNNs can be represented by a tensor $\mathbf{X}^{l-1} \in \mathbb{R}^{\acute{C}\times H\times W}$, where $\acute{C}$, H and W are the number of input channels, the height and the width, respectively. The input $\mathbf{X}^{l-1}$ is convolved with a weight tensor $\mathbf{W}^{l} \in \mathbb{R}^{C\times\acute{C}\times H_f\times W_f}$, where C is the number of output channels, H_f and W_f are the height and the width of filter kernel, respectively. A bias vector $\boldsymbol{b} \in \mathbb{R}^{C}$ is added to the result of convolution operation. Once all C channels are computed, an element-wise nonlinear function is applied to the result of the convolution

operations. Then, the cth channel of the output tensor $\mathbf{X}^l \in \mathbb{R}^{C \times H \times W}$ can be computed as

$$\mathbf{X}_c^l = g\left(\mathbf{W}_c^l * \mathbf{X}^{l-1} + \boldsymbol{b}_c\right), \tag{1}$$

where $*$ denotes convolution operation and $g()$ is some nonlinear function. In this paper, we assume $g()$ is the most commonly used rectified linear unit (ReLU) defined as $g(x) = \max(0, x)$ such that all activations are non-negative.

3.2 Conventional Methods

We formally describe previously proposed methods briefly reviewed in Section 2 using the unified model illustrated in Figure 1. To simplify notation, biases are not shown. Consider a network built using multiple convolutional layers and processed according to (1). Similar to Alwani et al. (2016), calculation of N sequential layers can be fused together without storing intermediate feature maps $\mathbf{X}^{l-N+1}, \ldots, \mathbf{X}^{l-1}$. For example, fusion can be done in a channel-wise fashion using memory buffers which are much smaller than the whole feature map. Then, feature map $\mathbf{X}^l \in \mathbb{R}$ can be quantized into $\hat{\mathbf{X}}^l \in \mathcal{Q}$ using a nonlinear quantization function $q()$ where $\mathcal{Q}$ is a finite field over integers. The quantization step may introduce a drop in accuracy due to imperfect approximation. The network can be further finetuned to restore some of the original accuracy (Courbariaux et al., 2015; Gysel et al., 2016). The network architecture is not changed after quantization and feature maps can be compressed only up to a certain suboptimal bitwidth resolution.

The next step implicitly introduced by Iandola et al. (2016) is to perform NDR using an additional convolutional layer. A mapping $\hat{\mathbf{X}}^l \in \mathcal{Q}^{C \times H \times W} \rightarrow \hat{\mathbf{Y}}^l \in \mathcal{Q}^{\tilde{C} \times H \times W}$ can be performed using projection weights $\mathbf{P}^l \in \mathbb{R}^{\tilde{C} \times C \times H_f \times W_f}$, where the output channel dimension $\tilde{C} < C$. Then, only compressed feature map $\hat{\mathbf{Y}}^l$ needs to be stored in the memory buffer. During the inverse steps, the compressed feature map can be projected back onto the higher-dimensional tensor $\hat{\mathbf{X}}^{l+1} \in \mathcal{Q}$ and, lastly, converted back to $\mathbf{X}^{l+1} \in \mathbb{R}$ using an inverse quantization function $q^{-1}()$. In the case of a fully quantized network, the inverse quantization can be omitted.

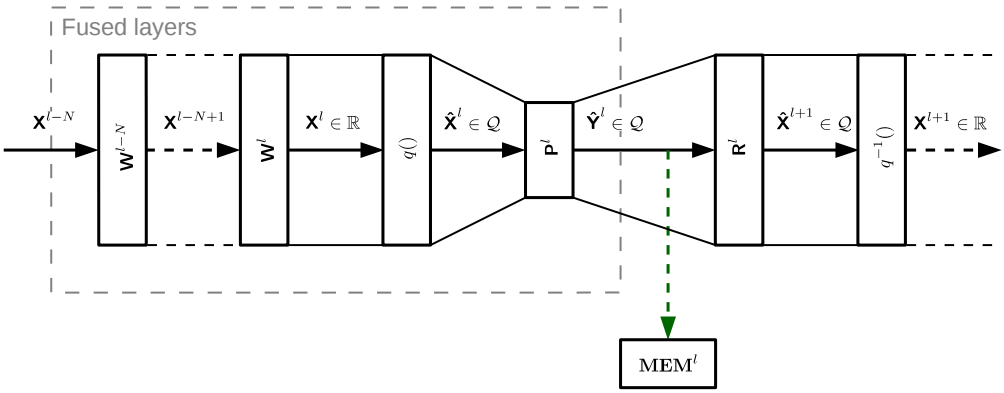

Figure 1: The unified model of conventional methods.

In practice, the number of bits for the feature map quantization step depends on the dataset, network architecture and desired accuracy. For example, over-parameterized architecture like AlexNet may require only 1 or 2 bits for small-scale datasets (CIFAR-10, MNIST, SVHN), but experience significant accuracy drops for large-scale datasets like ImageNet. In particular, the modified AlexNet (with the first and last layers kept in full-precision) top-1 accuracy is degraded by 12.4% and 6.8% for 1-bit XNOR-Net (Rastegari et al., 2016) and 2-bit DoReFa-Net (Zhou et al., 2016), respectively. At the same time, efficient network architectures e.g. Iandola et al. (2016) using NDR layers require 6-8 bits for the fixed-point quantization scheme on ImageNet and fail to work with lower precision activations. In this paper, we follow the path to select an efficient base network architecture and then introduce additional compression layers to obtain smaller feature maps as opposed to initially selecting an over-parametrized network architecture for quantization.

3.3 PROPOSED METHOD

3.3.1 REPRESENTATION OVER GF(2)

Consider a scalar x from $\mathbf{X}^l \in \mathbb{R}$. A conventional feature map quantization step can be represented as a scalar-to-scalar mapping or a nonlinear function $\hat{x} = q(x)$ such that

$$x \in \mathbb{R}^{1\times 1} \xrightarrow{q()} \hat{x} \in \mathcal{Q}^{1\times 1} : \min \|x - \hat{x}\|_2, \tag{2}$$

where $\hat{x}$ is the quantized scalar, $\mathcal{Q}$ is the GF(2^B) finite field for fixed-point representation and B is the number of bits.

We can introduce a new $\hat{x}$ representation by a linear binarization function $b()$ defined by

$$\hat{x} \in \mathcal{Q}^{1\times 1} \xrightarrow{b()} \tilde{\boldsymbol{x}} \in \mathcal{B}^{B\times 1} : \tilde{\boldsymbol{x}} = \boldsymbol{b} \otimes \hat{x}, \tag{3}$$

where $\otimes$ is a bitwise AND operation, vector $\boldsymbol{b} = [2^0, 2^1, \ldots, 2^{B-1}]^T$ and $\mathcal{B}$ is GF(2) finite field.

An inverse linear function $b^{-1}()$ can be written as

$$\tilde{\boldsymbol{x}} \in \mathcal{B}^{B\times 1} \xrightarrow{b^{-1}()} \hat{x} \in \mathcal{Q}^{1\times 1} : \hat{x} = \boldsymbol{b}^T \tilde{\boldsymbol{x}} = \boldsymbol{b}^T \boldsymbol{b} \otimes \hat{x} = (2^B - 1) \otimes \hat{x}. \tag{4}$$

Equations (3)-(4) show that a scalar over a higher cardinality finite field can be linearly converted to and from a vector over a finite field with two elements. Based on these derivations, we propose a feature map compression method shown in Figure 2. Similar to (Courbariaux et al., 2015), we quantize activations to obtain $\hat{\mathbf{X}}^l$ and, then, apply transformation (3). The resulting feature map can be represented as $\tilde{\mathbf{X}}^l \in \mathcal{B}^{B\times C\times H\times W}$. For implementation convenience, a new bit dimension can be concatenated along channel dimension resulting in the feature map $\tilde{\mathbf{X}}^l \in \mathcal{B}^{BC\times H\times W}$. Next, a single convolutional layer using weights $\mathbf{P}^l$ or a sequence of layers with $\mathbf{P}^l_i$ weights can be applied to obtain a compressed representation over GF(2). Using the fusion technique, only the compressed feature maps $\tilde{\mathbf{Y}}^l \in \mathcal{B}$ need to be stored in memory during inference. Non-compressed feature maps can be processed using small buffers e.g. in a sequential channel-wise fashion. Lastly, the inverse function $b^{-1}()$ from (4) using convolutional layers $\mathbf{R}^l_i$ and inverse of quantization $q^{-1}()$ undo the compression and quantization steps.

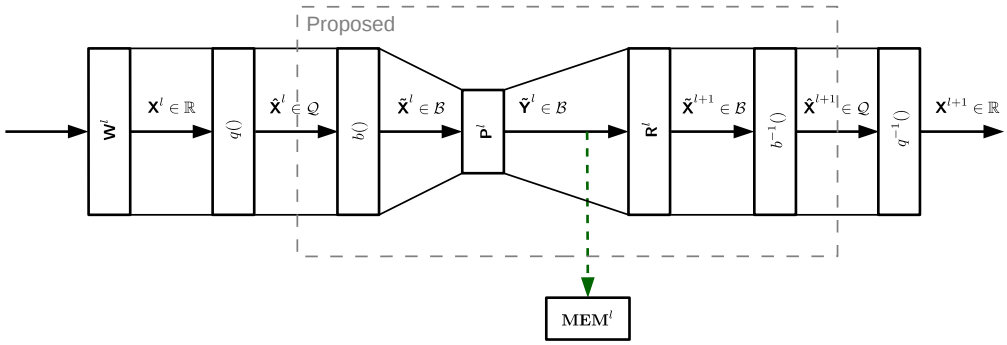

Figure 2: Scheme of the proposed method.

3.3.2 LEARNING OVER GF(2)

The graph model shown in Figure 3 explains details about the inference (forward pass) and backpropagation (backward pass) phases of the newly introduced functions. The inference phase represents (3)-(4) as explained above.

Clearly, the backpropagation phase may seem not obvious at a first glance. One difficulty related to the quantized network is that quantization function itself is not differentiable. But many studies e.g. Courbariaux et al. (2015) show that a minibatch-averaged floating-point gradient practically

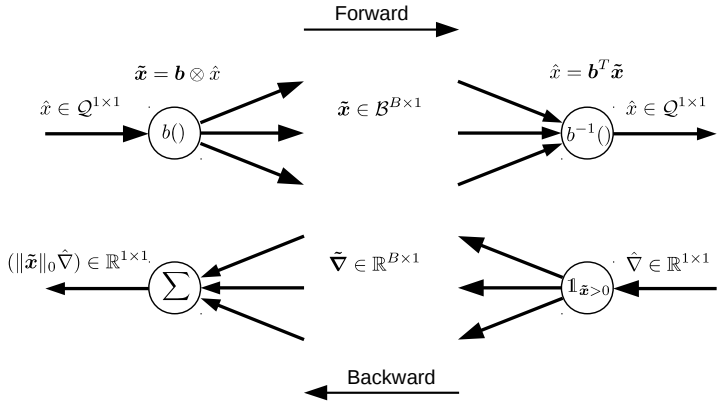

Figure 3: Forward and Backward passes during inference and backpropagation.

works well assuming quantized forward pass. The new functions $b()$ and $b^{-1}()$ can be represented as gates that make hard decisions similar to ReLU. The gradient of $b^{-1}()$ can then be calculated using results of (Bengio et al., 2013) as

$$\hat{\nabla} \in \mathbb{R}^{1\times1} \xrightarrow{b^{-1}()} \tilde{\boldsymbol{\nabla}} \in \mathbb{R}^{B\times1} : \tilde{\boldsymbol{\nabla}} = \mathbb{1}_{\tilde{\boldsymbol{x}}>0} \nabla. \tag{5}$$

Lastly, the gradient of $b()$ is just a scaled sum of the gradient vector calculated by

$$\tilde{\boldsymbol{\nabla}} \in \mathbb{R}^{B\times1} \xrightarrow{b()} \hat{\nabla} \in \mathbb{R}^{1\times1} : \hat{\nabla} = \mathbb{1}^T \tilde{\boldsymbol{\nabla}} = \mathbb{1}^T \mathbb{1}_{\tilde{\boldsymbol{x}}>0} \nabla = \|\tilde{\boldsymbol{x}}\|_0 \nabla, \tag{6}$$

where $\|\tilde{\boldsymbol{x}}\|_0$ is a gradient scaling factor that represents the number of nonzero elements in $\tilde{\boldsymbol{x}}$. Practically, the scaling factor can be calculated based on statistical information only once and used as a static hyperparameter for gradient normalization.

Since the purpose of the network is to learn and keep only the smallest $\tilde{\mathbf{Y}}^l$, the choice of $\mathbf{P}^l$ and $\mathbf{R}^l$ initialization is important. Therefore, we can initialize these weight tensors by an identity function that maps the non-compressed feature map to a truncated compressed feature map and vice versa. That provides a good starting point for training. At the same time, other initializations are possible e.g. noise sampled from some distribution studied by Bengio et al. (2013) can be added as well.

3.3.3 Network Architecture

To highlight benefits of the proposed approach, we select a base network architecture with the compressed feature maps according to Section 3.2. The selected architecture is based on a quantized SqueezeNet network. It consists of a sequence of "fire" modules where each module contains two concatenated "expand" layers and a "squeeze" layer illustrated in Figure 4. The "squeeze" layers perform NDR over the field of real or, in case of the quantized model, integer numbers. Specifically, the size of concatenated "expand 1×1" and "expand 3×3" layers is compressed by a factor of 8 along channel dimension by "squeeze 1×1" layer. Activations of only the former one can be stored during inference according to the fusion method. According to the analysis presented in Gysel et al. (2016), activations quantized to 8-bit integers do not experience significant accuracy drop.

The given base architecture is extended by the proposed method. The quantized "squeeze" layer feature map is converted to its binary representation following Figure 2. Then, the additional compression rate is defined by selecting parameters of $\mathbf{P}_i^l$. In the simplest case, only a single NDR layer can be introduced with the weights $\mathbf{P}^l$. In general, a number of NDR layers can be added with 1×1, 3×3 and other kernels with or without pooling at the expense of increased computational cost. For example, 1×1 kernels allow to learn optimal quantization and to compensate redundancies along channel dimension only. But 3×3 kernels can address spatial redundancies and, while being implemented with stride 2 using convolutional-deconvolutional layers, decrease feature map size along spatial dimensions.

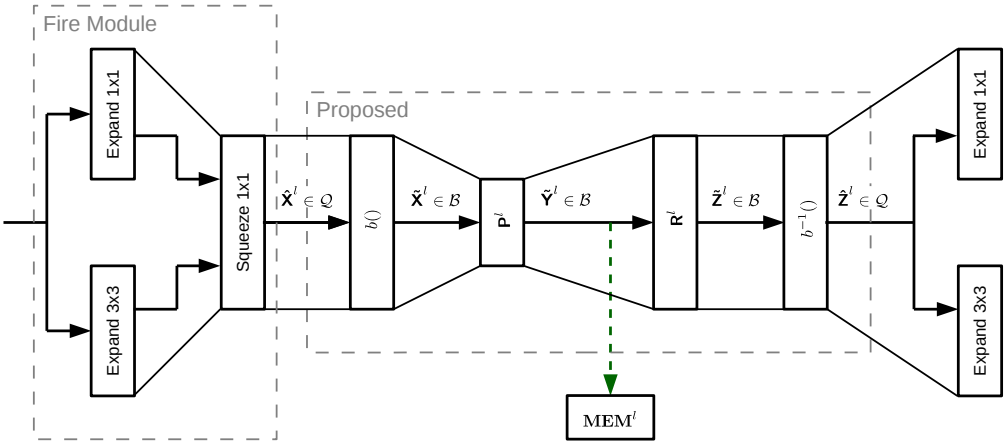

Figure 4: Extended "fire" module of SqueezeNet by the proposed method.

4 EXPERIMENTS

4.1 IMAGENET CLASSIFICATION

To evaluate the proposed method in image classification, we implemented the new binarization layers from Section 3 as well as quantization layers using modified (Gysel et al., 2016) code in the Caffe (Jia et al., 2014) framework. The latter code is modified to accurately support binary quantization during inference and training. SqueezeNet v1.1 is selected as a base floating-point network architecture, and its pretrained weights were downloaded from the publicly available source[2]. In this example, we compress the "fire2/squeeze" and "fire3/squeeze" layers which are the largest of the "squeeze" layers due to high spatial dimensions. The input to the network has a resolution of 227×227, and the weights are all floating-point. The quantized versions, as well as the proposed versions of the base model, were retrained for 100,000 iterations with a minibatch size of 1024 using the ImageNet (Russakovsky et al., 2015) (ILSVRC2012) training dataset, and SGD solver with a step-policy learning rate starting from 1e-3 divided by 10 every 20,000 iterations. The compressed models were derived and retrained iteratively from the 8-bit quantized model. Table 1 reports top-1 and top-5 inference accuracies of 50,000 images from ImageNet validation dataset.

Table 1: ImageNet accuracy: A - "fire2,3/squeeze" feature maps and W - weights.

Model	W size, MB	A size, KB	Top-1 Accuracy, %	Top-5 Accuracy, %
fp32	4.7	392	58.4	81.0
Quantized				
uint8	4.7	98.0	58.6(58.3)	81.1(81.0)
uint6	4.7	73.5	57.8(55.5)	80.7(78.7)
uint4	4.7	49.0	54.9(18.0)	78.3(34.2)
Proposed: $b() \rightarrow 1\times1 \rightarrow 1\times1 \rightarrow b^{-1}()$				
uint6	5.0	73.5	58.8	81.3
uint4	4.9	49.0	57.3	80.0
Proposed: $b() \rightarrow 3\times3/2 \rightarrow 3\times3*2 \rightarrow b^{-1}()$				
uint8	7.6	24.5	54.1	77.4
uint6	6.9	18.4	53.8	77.2

[2]https://github.com/DeepScale/SqueezeNet

According to Table 1, the quantized models after retraining experience -0.2%, 0.6% and 3.5% top-1 accuracy drops for 8-bit, 6-bit and 4-bit quantization, respectively. For comparison, the quantized models without retraining are shown in parentheses. The proposed compression method using 1×1 kernels allows us to restore corresponding top-1 accuracy by 1.0% and 2.4% for 6-bit and 4-bit versions at the expense of a small increase in the number of weights and bitwise convolutions. Note that for the proposed approach, number-of-bit notation is used only for relative comparison because each bit is processed independently and implies number of *equivalent* bits.

Moreover, we evaluated a more sophisticated compression scheme with a convolutional layer followed by a deconvolutional layer both with a 3×3 stride 2 kernel at the expense of a 47% increase in weight size for 6-bit activations. That allowed us to decrease feature maps in spatial dimensions by exploiting local spatial quantization redundancies. Then, the feature map size is further reduced by a factor of 4, while top-1 accuracy dropped by 4.3% and 4.6% for 8-bit and 6-bit activations. respectively. A comprehensive comparison with the state-of-the-art networks is given in Appendix A.

4.2 KITTI Object Detection

We evaluate the proposed approach for object detection which is a more realistic application for autonomous cars where the high-resolution cameras emphasize feature map compression benefits. The KITTI (Geiger et al., 2012) dataset, which consists of 7,481 annotated images for training and 7,518 images for testing, is used for evaluation. Since the test ground-truth labels are not available, training images are split into a training subset and a validation subset with 3,682 and 3,799 images, respectively. Because KITTI images are recorded in 12-frame sequences, we exclude sequence overlap in training and validation datasets following previous works (Chen et al., 2015). Successful detections are evaluated using the KITTI benchmark methodology for three classes and three difficulty levels: easy (E), moderate (M) and hard (H).

We adopted the Faster R-CNN detector (Ren et al., 2015) for the proposed architecture. SqueezeNet pretrained on ImageNet is used as a feature extractor for the Faster R-CNN object detector instead of the original VGG-16 network. This reduces the size of the parameters and overall inference time for the network. We resize the original 1242×375 images to 1988×600 resolution to increase detection accuracy. As with ImageNet experiments, we generated several models for comparisons: a base floating-point model, a quantized model, and a compressed model. We apply quantization and compression to the "fire2/squeeze" and "fire3/squeeze" layers which represent, if the fusion technique is applied, more than 50% of total feature map memory due to their large spatial dimensions. Typically, spatial dimensions decrease quadratically because of network max pooling layers compared to linear growth in the depth dimension. This explains why the very first feature maps are the most memory-intensive, while the opposite holds for weights. The compressed model is derived from the 8-bit quantized model, and both are retrained for 200,000 batch-1 iterations using SGD solver with a step-policy learning rate starting from 1e-3 divided by 10 every 90,000 iterations.

Table 2: KITTI accuracy: A - "fire2,3/squeeze" feature maps and W - weights.

Model	W size, MB	A size, MB	Car			Pedestrian			Cyclist		
			E	M	H	E	M	H	E	M	H
fp32	15.7	9.1	92.5	78.5	67.8	82.5	66.7	59.5	63.0	53.2	50.2
Quantized											
uint16	15.7	9.1	93.5	78.6	68.1	82.5	66.6	60.2	62.5	52.05	48.7
uint8	15.7	2.3	92.8	78.7	68.2	82.5	66.5	60.3	62.6	51.1	48.3
uint6	15.7	1.7	86.3	76.2	62.8	79.4	64.4	57.7	52.6	43.5	41.2
Proposed $b() \rightarrow 1\times1 \rightarrow 1\times1 \rightarrow b^{-1}()$											
uint8	16.1	2.3	93.0	78.9	68.4	81.5	66.6	59.7	62.8	51.5	48.3
uint6	16.0	1.7	91.9	78.7	68.0	77.8	63.7	57.7	63.2	51.7	48.3

Table 2 presents KITTI results for the floating-point model which are close to the original Faster R-CNN with VGG-16 feature extractor. The quantized models show that 8-bit quantization with retraining drops accuracy by less than 1% on average, while 6-bit and 4-bit quantization decreases

accuracy by more than 6% on average. Using the proposed compression-decompression layers with a 1×1 kernel, average accuracy for the 6-bit model is restored by 4.1%. Hence, activations can be compressed by additional 25% without significant accuracy drop.

4.3 Object Detector Memory Requirements

Table 3 summarizes memory footprint benefits for the evaluated object detection models which degrade accuracy by less than 1% on average. Similar to the previous section, we consider only the largest feature maps that represent more than 50% of total activation memory. Assuming that the input frame is stored separately, the fusion technique allows to compress feature maps by a factor of 19. Note that no additional recomputations are needed. Second, conventional 8-bit fixed-point quantization further decreases the size of feature maps by a factor of 4. Third, the proposed compression layers decrease the number of activation bits from 8 to 6 with approximately the same accuracy according to Table 3 at the expense of additional bitwise operations and a small increase in weight size. In total, the memory footprint for this feature extractor is reduced by two orders of magnitude.

Table 3: Memory requirements: F - fusion, Q - quantization, C - compression.

Layer	Activation Dimensions	Base (fp32) Size, MB	F (fp32) Size, MB	F+Q (uint8) Size, MB	F+Q+C (uint6) Size, MB
input (int8)	3×600×1988	3.4	3.4	3.4	3.4
conv1	64×300×994	72.8	0.0	0.0	0.0
maxpool1	64×150×497	18.2	0.0	0.0	0.0
fire2/squeeze	16×150×497	4.6	4.6	1.1	0.9
fire2/expand	128×150×497	36.4	0.0	0.0	0.0
fire3/squeeze	16×150×497	4.6	4.6	1.1	0.9
fire3/expand	128×150×497	36.4	0.0	0.0	0.0
Total		172.9	9.2	2.3	1.7

5 Conclusions

We introduced a method to decrease memory storage and bandwidth requirements for DNNs. Complementary to conventional approaches that use fused layer computation and quantization, we presented an end-to-end method for learning feature map representations over GF(2) within DNNs. Such a binary representation allowed us to compress network feature maps in a higher-dimensional space using autoencoder-inspired layers embedded into a DNN. These compression-decompression layers can be implemented using conventional convolutional layers with bitwise operations. To be more precise, the proposed representation traded cardinality of the finite field with the dimensionality of the vector space which makes possible to learn features at the binary level. The evaluated compression strategy for inference can be adopted for GPUs, CPUs or custom accelerators. Alternatively, existing binary networks can be extended to accurately support emerging applications such as object detection and others.

References

Manoj Alwani, Han Chen, Michael Ferdman, and Peter A. Milder. Fused-layer CNN accelerators. In *MICRO*, pp. 1–12, October 2016.

Yoshua Bengio, Nicholas Léonard, and Aaron Courville. Estimating or propagating gradients through stochastic neurons for conditional computation. *arXiv preprint arXiv:1308.3432*, 2013.

Xiaozhi Chen, Kaustav Kundu, Yukun Zhu, Andrew Berneshawi, Huimin Ma, Sanja Fidler, and Raquel Urtasun. 3d object proposals for accurate object class detection. In *NIPS*, December 2015.

Matthieu Courbariaux, Yoshua Bengio, and Jean-Pierre David. Training deep neural networks with low precision multiplications. In *ICLR*, May 2015.

Andreas Geiger, Philip Lenz, and Raquel Urtasun. Are we ready for autonomous driving? the KITTI vision benchmark suite. In *CVPR*, June 2012.

Benjamin Graham and Laurens van der Maaten. Submanifold sparse convolutional networks. *arXiv preprint arXiv:1706.01307*, 2017.

Philipp Gysel, Mohammad Motamedi, and Soheil Ghiasi. Hardware-oriented approximation of convolutional neural networks. In *ICLR*, May 2016.

Song Han, Huizi Mao, and William J Dally. Deep compression: Compressing deep neural networks with pruning, trained quantization and Huffman coding. In *ICLR*, May 2016.

Kaiming He, Xiangyu Zhang, Shaoqing Ren, and Jian Sun. Deep residual learning for image recognition. *arXiv preprint arXiv:1512.03385*, 2015.

Geoffrey Hinton and Ruslan Salakhutdinov. Reducing the dimensionality of data with neural networks. *Science*, 313(5786):504–507, July 2006.

Mark Horowitz. Computing's energy problem (and what we can do about it). In *ISSCC*, pp. 10–14, February 2014.

Jonathan Huang, Vivek Rathod, Chen Sun, Menglong Zhu, Anoop Korattikara, Alireza Fathi, Ian Fischer, Zbigniew Wojna, Yang Song, Sergio Guadarrama, and Kevin Murphy. Speed/accuracy trade-offs for modern convolutional object detectors. In *CVPR*, July 2017.

Itay Hubara, Matthieu Courbariaux, Daniel Soudry, Ran El-Yaniv, and Yoshua Bengio. Binarized neural networks. In *NIPS*, pp. 4107–4115. 2016.

Forrest N Iandola, Song Han, Matthew W Moskewicz, Khalid Ashraf, William J Dally, and Kurt Keutzer. Squeezenet: Alexnet-level accuracy with 50x fewer parameters and <0.5MB model size. *arXiv preprint arXiv:1602.07360*, 2016.

Yangqing Jia, Evan Shelhamer, Jeff Donahue, Sergey Karayev, Jonathan Long, Ross Girshick, Sergio Guadarrama, and Trevor Darrell. Caffe: Convolutional architecture for fast feature embedding. *arXiv preprint arXiv:1408.5093*, 2014.

Yann LeCun, John S. Denker, and Sara A. Solla. Optimal brain damage. In *NIPS*, pp. 598–605. 1990.

Daisuke Miyashita, Edward H. Lee, and Boris Murmann. Convolutional neural networks using logarithmic data representation. *arXiv preprint arXiv:1603.01025*, 2016.

Peter O'Connor and Max Welling. Sigma delta quantized networks. In *ICLR*, April 2017.

Angshuman Parashar, Minsoo Rhu, Anurag Mukkara, Antonio Puglielli, Rangharajan Venkatesan, Brucek Khailany, Joel Emer, Stephen W. Keckler, and William J. Dally. SCNN: An accelerator for compressed-sparse convolutional neural networks. In *ISCA*, pp. 27–40, 2017.

Mohammad Rastegari, Vicente Ordonez, Joseph Redmon, and Ali Farhadi. XNOR-net: Imagenet classification using binary convolutional neural networks. *arXiv preprint arXiv:1603.05279*, 2016.

Shaoqing Ren, Kaiming He, Ross Girshick, and Jian Sun. Faster R-CNN: Towards real-time object detection with region proposal networks. In *NIPS*, December 2015.

Olga Russakovsky, Jia Deng, Hao Su, Jonathan Krause, Sanjeev Satheesh, Sean Ma, Zhiheng Huang, Andrej Karpathy, Aditya Khosla, Michael Bernstein, Alexander C. Berg, and Li Fei-Fei. ImageNet Large Scale Visual Recognition Challenge. *IJCV*, 115(3):211–252, 2015.

Wei Tang, Gang Hua, and Liang Wang. How to train a compact binary neural network with high accuracy? In *AAAI*, 2017.

Shuchang Zhou, Yuxin Wu, Zekun Ni, Xinyu Zhou, He Wen, and Yuheng Zou. DoReFa-Net: Training low bitwidth convolutional neural networks with low bitwidth gradients. *arXiv preprint arXiv:1606.06160*, 2016.

A COMPARISON WITH THE STATE-OF-THE-ART NETWORKS

We compare the most recent ImageNet reported results for networks that compress feature map size as well as several configurations of the proposed approach. Most of the works use the over-parametrized AlexNet architecture while our architecture is based on SqueezeNet. Table 4 shows accuracy results for such base networks as well as their quantized versions. Binary XNOR-Net (Rastegari et al., 2016) estimates based on AlexNet as well as ResNet-18. DoReFa-Net (Zhou et al., 2016) is more flexible and can adjust the number of bits for weights and activations. Since its accuracy is limited by the number of activation bits, we present three cases with 1-bit, 2-bit, and 4-bit activations. The most recent work (Tang et al., 2017) solves the problem of binarizing the last layer weights, but weights of the first layer are still in full-precision. Overall, AlexNet-based low-precision networks achieve 43.6%, 49.8%, 53.0% top-1 accuracy for 1-bit, 2-bit and 4-bit activations, respectively. Around 70% of the memory footprint is defined by the first two layers of AlexNet. The fusion technique is difficult in such architectures due to large kernel sizes (11×11 and 5×5 for AlexNet) which can cause extra recomputations. Thus, activations require 95.4KB, 190.0KB and 381.7KB of memory for 1-bit, 2-bit and 4-bit models, respectively. The NIN-based network from (Tang et al., 2017) with 2-bit activations achieves 51.4% top-1 accuracy, but its activation memory is larger than AlexNet due to late pooling layers.

Table 4: ImageNet accuracy: W - weights, A - feature maps.

Methods	Base Model	W, bits	W size, MB	A, bits	A size, KB	Top-1 Accuracy, %	Top-5 Accuracy, %
AlexNet	-	32	232	32	3053.7	56.6	79.8
AlexNet	-	32	232	6	572.6	55.8	79.2
XNOR-Net	AlexNet	1[1]	22.6	1	344.4[2]	44.2	69.2
XNOR-Net	ResNet-18	1[1]	3.34	1	1033.0[2]	51.2	73.2
DoReFa-Net	AlexNet	1[1]	22.6	1	95.4	43.6	-
DoReFa-Net	AlexNet	1[1]	22.6	2	190.9	49.8	-
DoReFa-Net	AlexNet	1[1]	22.6	4	381.7	53.0	-
Tang'17	AlexNet	1[3]	7.43	2	190.9	46.6	71.1
Tang'17	NIN-Net	1[3]	1.23	2	498.6	51.4	75.6
The proposed models							
SqueezeNet	-	32	4.7	32	12165.4	58.4	81.0
F+Q	SqueezeNet	8	1.2	8	189.9	58.3	80.8
F+Q+C(1×1)	SqueezeNet	8	1.2	6(8)[4]	165.4	58.3(58.8)[5]	81.0(81.3)[5]
F+Q+C(1×1)	SqueezeNet	8	1.2	4(8)[4]	140.9	56.6(57.3)[5]	79.7(80.0)[5]
F+Q+C(3×3s2)	SqueezeNet	8	1.9	8(8)[4]	116.4	53.5(54.1)[5]	76.7(77.4)[5]
F+Q+C(3×3s2)	SqueezeNet	8	1.7	6(8)[4]	110.3	53.0(53.8)[5]	76.8(77.2)[5]

[1] Weights are not binarized for the first and the last layer.
[2] Activations estimates are based on 8-bit assumption since it is not clear from Rastegari et al. (2016) whether the activations were binarized or not for the first and the last layer.
[3] Weights are not binarized for the first layer.
[4] Number of equivalent bits for the compressed "fire2,3/squeeze" layers and, in parentheses, for quantized only layers.
[5] For comparison, accuracy in parentheses represents result for the corresponding model in Table 1.

The SqueezeNet-based models in Table 4 are finetuned from the corresponding models in Table 1 for 40,000 iterations with a minibatch size of 1024, and SGD solver with a step-policy learning rate starting from 1e-4 divided by 10 every 10,000 iterations. The model with fusion and 8-bit quantized weights and activations, while having an accuracy similar to floating-point model, outperforms the state-of-the-art networks in terms of weight and activation memory. The proposed four models from Table 1 with all layers and weights being quantized further decrease activation memory by adding compression-decompression layers to "fire2,3/squeeze" modules. This step allowed to shrink memory from 189.9KB to 165.4KB, 140.9KB, 116.4KB and 110.3KB depending on the compression configuration. More compression is possible, if apply the proposed approach to other "squeeze" layers.