LEARNING MULTI-SCALE LOCAL CONDITIONAL PROBABILITY MODELS OF IMAGES

Anonymous authors
Paper under double-blind review

ABSTRACT

Deep neural networks can learn powerful prior probability models for images, as evidenced by high-quality synthesis results achieved with VAEs, GANs, and recent score-based diffusion methods. But these models are implicit, and the means by which these networks capture complex global statistical structure, apparently without suffering from the curse of dimensionality, remain a mystery. To study this, we generalize a multi-scale model class motivated by the renormalization group of theoretical physics. It circumvents the curse of dimensionality by assuming Markov structure of multi-scale wavelet coefficients conditioned on coarser scale coefficients. We parameterize the model using conditional convolutional neural networks with local receptive fields, which enforce stationary Markov properties. We test the capabilities of the model on a dataset of face images, which are highly non-stationary and contain long-range geometric structures. Remarkably, denoising, super-resolution, and image synthesis results demonstrate that these structures are well-captured, using significantly smaller neighborhoods than required by a CNN operating in the pixel domain.

1 INTRODUCTION

The development of probability models for high-dimensional signals is a fundamental problem in many fields. The problem is extremely difficult due to the curse of dimensionality: empirical estimation of a probability density in a multi-dimensional space generally requires data samples whose number grows with volume, and thus exponentially with dimensionality. Traditional methods have usually handled this by assuming simple forms (e.g., Gaussian, or mixtures of Gaussians), or by reducing to small numbers of dimensions. A well-known methodology for generating global dependencies using a low-dimensional model is to assume a Markov property. In a Markov random field (Geman & Geman, 1984), specifically, the density is factorized into terms acting over localized but overlapping neighborhoods, and global dependencies arise through the cascaded effects of these local interactions. In the context of visual images, these models have been effective in capturing local properties, but have not led to effective global models.

Deep neural network models seem to escape this curse, as evidenced by the synthesis of high-quality images using auto-encoders (Kingma & Welling, 2013), Generative Adversarial Networks (Goodfellow et al., 2020), normalizing flows (Rezende & Mohamed, 2015) and score-based diffusion models (Song & Ermon, 2019). The representation of complex image features in these models is thought to arise from some combination of architectural restrictions and algorithmic regularization that imposes strong simplifications on the learned densities. But in these methods, the probability models are implicit—the networks are trained to represent images in a restricted latent space, or to solve an inference problem such as denoising—obscuring the nature of the underlying densities. In some fully convolutional neural network (CNN) architectures (Zhang et al., 2017), transformations are achieved using convolutions with localized filters, which define an implicit Markov models over neighborhoods defined by the "receptive field" (RF) of the network. The spatial Markov restriction reduces the parameterization, but limits the ability of these networks in capturing image features larger than the RF. Larger RFs can be achieved with CNN architectures that incorporate subsampling, such as U-Nets (Ronneberger et al., 2015). However, the constraints on the underlying probability models and the means by which they are able to avoid the curse of dimensionality are not apparent.

In signal processing, the introduction of multi-scale decompositions provided a new substrate for signal and image probability models. First, the heavy-tailed nature of coefficient distributions led to a wave of sparse non-Gaussian marginal models. Second, models with local conditioning over *scale*, as well as spatial location, led to substantial improvements in basic problems such as denoising and compression (e.g., Chambolle et al. (1998); Buccigrossi & Simoncelli (1999); Mihçak et al. (1999); Wainwright et al. (2001); Romberg et al. (2001); Şendur & Selesnick (2002)). Multi-scale representations with or without wavelets have been shown to improve deep neural network generation, for auto-encoders (Chen et al., 2018), GANs (Gal et al., 2021) and normalizing flows (Yu et al., 2020; Li, 2021). Recent work, inspired by renormalization group theory in physics, has shown that probability distributions with long-range dependencies can be factorized as a product of Markov conditional probabilities over orthogonal wavelet coefficients (Marchand et al., 2022). This was applied to stationary ergodic physical fields, which are a class of image textures, with a linearly parameterized Gibbs energy. Related wavelet conditional models have recently been used to accelerate score diffusion models but with non-local conditional probabilities (Guth et al., 2022).

Here, we generalize Markov wavelet conditional models to estimate the probability distribution of more general image classes which may be non-stationary. We focus on faces, which present a particularly challenging example because of their long-range geometric structure. At each scale, we define a conditional wavelet probability distribution by a score, parameterized by a conditional CNN (cCNN) with a small RF. The locality of conditioning arising from the RF enforces a Markov property over the wavelet coefficients, circumventing the curse of dimensionality, while retaining the ability to capture complex long-range dependencies in the pixel domain. The cCNN score model at each scale is trained with a conditional image denoising objective (Saharia et al., 2021; Ho et al., 2022; Dhariwal & Nichol, 2021). We impose a RF size that is the same across all scales and independent of image size. We evaluate our model on denoising, super-resolution, and synthesis, and show that the RF size can be made quite small without harming performance. In comparison, the performance of CNNs restricted to a fixed RF size in the pixel domain dramatically degrades when the RF is made smaller than the image. It shows that the long-range dependencies in the pixel domain are captured by the Markov wavelet conditioning model, which offers a substantial improvement over Markov assumptions in the pixel domain.

2 MARKOV WAVELET CONDITIONAL MODELS

Images are high-dimensional vectors. Estimating an image probability distribution is therefore plagued by the curse of dimensionality, unless one limits the estimation to a relatively low-dimensional model class. This section introduces such a model class as a product of Markov conditional probabilities over multi-scale wavelet coefficients.

Markov random fields (Dobrushin, 1968; Sherrington & Kirkpatrick, 1975) define low-dimensional models by assuming that the probability distribution has local conditional dependencies over a graph, which is known a priori. One can then factorize the probability density into a product of conditional probabilities, each defined over a small number of variables (Clifford & Hammersley, 1971). Markov random fields have been used to model stationary texture images, with conditional dependencies within small spatial regions of the pixel image grid. At a location u, such a Markov model assumes that the pixel value $\boldsymbol{x}(u)$, conditioned by pixel values $\boldsymbol{x}(v)$ for v in a neighborhood of u, is independent from all pixels outside this neighborhood. Beyond stationary textures, however, the chaining of short-range dependencies in pixel domain has proven insufficient to capture the complexity of long-range geometrical structures. Many variants of Markov models have been proposed (Geman & Geman, 1984; Malfait & Roose, 1997; Cui & Wang, 2005), but none have been able to demonstrate performance comparable to recent deep networks while retaining a local dependency structure.

Based on the renormalization group approach in statistical physics (Wilson, 1971), new probability models are introduced in Marchand et al. (2022), structured as a product of probabilities of wavelet coefficients conditioned on coarser-scale values, with spatially local dependencies. These Markov conditional models have been applied to ergodic stationary physical fields, with simple conditional Gibbs energies that are parameterized linearly. Here, we generalize such models by parameterizing conditional Gibbs energy gradients with deep conditional convolutional neural networks having a local RF. This yields a class of Markov wavelet conditional models that can generate complex structured images, while explicitly relying on local dependencies to reduce the model dimensionality.

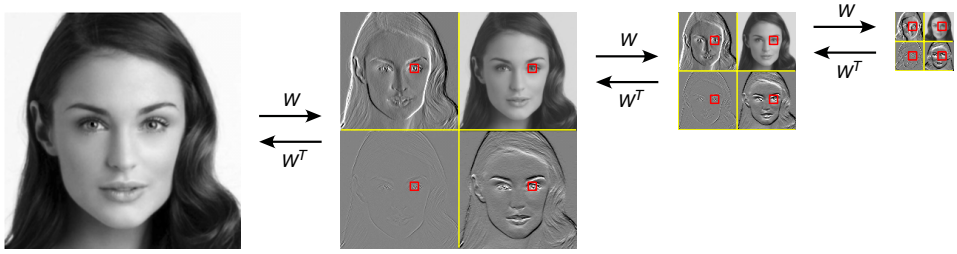

Figure 1: Markov wavelet conditional model structure. At each scale j, the fast wavelet transform W decomposes an image $\boldsymbol{x}_{j-1}$ into three wavelet channels, $\bar{\boldsymbol{x}}_j$, containing vertical, horizontal, and diagonal details, and a low-pass channel $\boldsymbol{x}_j$ containing a coarse approximation of the image, all subsampled by a factor of two. At each scale j, we assume a Markov wavelet conditional model, in which the probability distribution of any wavelet coefficient of $\bar{\boldsymbol{x}}_j$ (here, centered on the left eye), conditioned on values of $\boldsymbol{x}_j$ and $\bar{\boldsymbol{x}}_j$ in a local spatial neighborhood (regions within red squares), is independent of all coefficients of $\bar{\boldsymbol{x}}_j$ outside this neighborhood.

A fast orthonormal wavelet transform uses a separable convolutional and subsampling operator W defined with conjugate mirror filters (Mallat, 2009), to iteratively compute wavelet coefficients (see Figure 1). Let $\boldsymbol{x}_0$ be an image of $N \times N$ pixels. For each scale $j > 1$, the operator W decomposes $\boldsymbol{x}_{j-1}$ into:

$$W\boldsymbol{x}_{j-1} = (\bar{\boldsymbol{x}}_j, \boldsymbol{x}_j),$$

where $\boldsymbol{x}_j$ is a lower-resolution image and $\bar{\boldsymbol{x}}_j$ is an array of three wavelet coefficient images, each with dimensions $N/2^j \times N/2^j$, as illustrated in Figure 1. The inverse wavelet transform iteratively computes $\boldsymbol{x}_{j-1} = W^T(\bar{\boldsymbol{x}}_j, \boldsymbol{x}_j)$.

We now introduce the wavelet conditional factorization of probability models. Since W is orthogonal, the probability density of $\boldsymbol{x}_{j-1}$ is also the joint density of $(\boldsymbol{x}_j, \bar{\boldsymbol{x}}_j)$. It can be factorized by conditioning on $\boldsymbol{x}_j$:

$$p(\boldsymbol{x}_{j-1}) = p(\boldsymbol{x}_j, \bar{\boldsymbol{x}}_j) = p(\boldsymbol{x}_j)p(\bar{\boldsymbol{x}}_j|\boldsymbol{x}_j).$$

This is performed J times, so that the lowest resolution image $\boldsymbol{x}_J$ is small enough, which yields:

$$p(\boldsymbol{x}) = p(\boldsymbol{x}_J) \prod_{j=1}^{J} p(\bar{\boldsymbol{x}}_j|\boldsymbol{x}_j). \tag{1}$$

The conditional distributions $p(\bar{\boldsymbol{x}}_j|\boldsymbol{x}_j)$ specify the dependencies of image details at scale j conditioned on the coarser scale values. They may be represented with a conditional Gibbs energy:

$$p(\bar{\boldsymbol{x}}_j|\boldsymbol{x}_j) = \mathcal{Z}_j(\boldsymbol{x}_j)^{-1}\, e^{-E_j(\bar{\boldsymbol{x}}_j|\boldsymbol{x}_j)}, \tag{2}$$

where $\mathcal{Z}(\boldsymbol{x}_j)$ is the normalization constant for each $\boldsymbol{x}_j$. The conditional Gibbs energies (2) have been used in the wavelet conditional renormalization group approach to obtain a stable parameterization of the probability model even at critical phase transitions, when the parameterization of the global Gibbs energy becomes singular.

Local wavelet conditional renormalization group models (Marchand et al., 2022) further impose that $p(\bar{\boldsymbol{x}}_j|\boldsymbol{x}_j)$ is a conditional Markov random field. That is, the probability distribution of a wavelet coefficient of $\bar{\boldsymbol{x}}_j$ conditioned on values of $\boldsymbol{x}_j$ and $\bar{\boldsymbol{x}}_j$ in a restricted spatial neighborhood is independent of all coefficients of $\bar{\boldsymbol{x}}_j$ and $\bar{\boldsymbol{x}}$ outside this neighborhood (see Figure 1). The Hammersley-Clifford theorem states that this Markov property is equivalent to imposing that E_j can be written as a sum of potentials, which only depends upon values of $\bar{x}_j$ and x_j over local cliques (Clifford & Hammersley, 1971). This decomposition lifts the curse of dimensionality, since one only needs to estimate potentials over neighborhoods of fixed size, which does not grow with the image size. To model ergodic stationary physical fields, the local potentials of the Gibbs energy E_j have been parameterized linearly by using prior physical models.

We generalize Markov wavelet conditional models by parameterizing the conditional score with a cCNN having small RFs:

$$-\nabla_{\bar{\boldsymbol{x}}_j} \log p(\bar{\boldsymbol{x}}_j|\boldsymbol{x}_j) = \nabla_{\bar{\boldsymbol{x}}_j} E_j(\bar{\boldsymbol{x}}_j|\boldsymbol{x}_j). \tag{3}$$

Computing the score (3) is equivalent to specifying the Gibbs model (2) without calculating the normalization constants $\mathcal{Z}(\boldsymbol{x}_j)$, which are not needed in noise removal, super-resolution or image synthesis applications.

3 SCORE-BASED MARKOV WAVELET CONDITIONAL MODELS

Score-based diffusion models have produced impressive image generation results. To capture large-scale properties, however, these networks require RFs that encompass the entire image. Our score-based wavelet conditional model leverages the Markov assumption to compute the score using cCNNs with small receptive fields, offering a low-dimensional parameterization of the image distribution while retaining long-range geometric structures.

Let $\boldsymbol{y} = \boldsymbol{x} + \boldsymbol{z}$ be a noisy observation of clean image $\boldsymbol{x} \in \mathbb{R}^{N^2}$ drawn from $p(\boldsymbol{x})$, with $\boldsymbol{z} \sim \mathcal{N}(0, \sigma^2 \mathrm{Id})$ a sample of Gaussian white noise. The minimum mean squared error (MMSE) estimate of the true image is well-known to be the conditional mean of the posterior:

$$\hat{\boldsymbol{x}}(\boldsymbol{y}) = \int \boldsymbol{x} p(\boldsymbol{x}|\boldsymbol{y}) \mathrm{d}\boldsymbol{x}. \tag{4}$$

This integral can be re-expressed in terms of the score:

$$\hat{\boldsymbol{x}}(\boldsymbol{y}) = \boldsymbol{y} + \sigma^2 \nabla_{\boldsymbol{y}} \log p(\boldsymbol{y}). \tag{5}$$

This remarkable result, first introduced in Miyasawa (1961), exposes a direct and explicit relationship between the score of probability distributions and denoising (see Appendix B for proof.) Note that the relevant density is not the image distribution, $p(\boldsymbol{x})$, but the *noisy observation density* $p(\boldsymbol{y})$. This density converges to $p(\boldsymbol{x})$ as the noise variance σ^2 goes to zero.

Thanks to eq. (5), the score can be approximated by learning a parametric mapping to estimate the denoised image, $f(\boldsymbol{y}) \approx \hat{\boldsymbol{x}}(\boldsymbol{y})$. Specifically, we can implement this mapping with a CNN, and optimize its parameters by minimizing the denoising MSE over a large training set of images and their noise-corrupted counterparts. Given a sufficiently expressive architecture, the denoising residual, $f(\boldsymbol{y}) - \boldsymbol{y}$, provides an approximation of the score, $\sigma^2 \nabla_{\boldsymbol{y}} \log p(\boldsymbol{y})$. Also known as denoising score matching (Vincent, 2011), such denoiser-estimated score functions have been used in iterative algorithms for drawing samples from the density, or solving inverse problems (Song et al., 2021; Kadkhodaie & Simoncelli, 2021; Cohen et al., 2021; Kawar et al., 2021; Laumont et al., 2022).

To model the conditional wavelet distribution $p(\bar{\boldsymbol{x}}_j|\boldsymbol{x}_j)$, Guth et al. (2022) parameterize the score $\nabla_{\bar{\boldsymbol{y}}_j} \log p(\bar{\boldsymbol{y}}_j|\boldsymbol{x}_j)$ of noisy wavelet coefficients $\bar{\boldsymbol{y}}_j$ conditionally to a clean low-pass image $\boldsymbol{x}_j$ with a cCNN. Specifically, the cCNN takes three noisy wavelet detail channels as input, along with the corresponding low-pass channel, and generates three estimated detail channels. The network is trained to minimize mean square error between $\bar{\boldsymbol{x}}_j$ and $f_j(\bar{\boldsymbol{y}}_j, \boldsymbol{x}_j)$. Additionally, at the coarsest scale J, a CNN denoiser $f_J(\boldsymbol{y}_J)$ is trained to estimate the score of the low-pass band, $\nabla_{\boldsymbol{y}_J} \log p(\boldsymbol{x}_J)$ by minimizing mean square error between $\boldsymbol{x}_J$ and $f_J(\boldsymbol{y}_J)$.

The following theorem proves that the Markov wavelet conditional property is equivalent to imposing that the cCNN RFs are restricted to the conditioning neighborhoods. The RF of a given element of the network response is defined as the set of input image pixels on which this element depends.

Theorem 1. *The wavelet conditional density $p(\bar{\boldsymbol{x}}_j|\boldsymbol{x}_j)$ is Markov over a family of conditioning neighborhoods if and only if the conditional score $\nabla_{\bar{\boldsymbol{x}}_j} \log p(\bar{\boldsymbol{x}}_j|\boldsymbol{x}_j)$ can be computed with a network whose RFs are included in these conditioning neighborhoods.*

The proof of the theorem is provided in Appendix A. Note that even if the conditional distribution of clean wavelet coefficients $p(\bar{\boldsymbol{x}}|\boldsymbol{x}_j)$ satisfies a local Markov property, the noisy distribution $p(\bar{\boldsymbol{y}}_j|\boldsymbol{x}_j)$ is in general not Markovian. However, we shall parameterize the scores with a cCNN with small RFs and hence show that both the noisy and clean distributions are Markovian. At each scale $1 \leq j \leq J$, the cCNN has RF that is localized in both $\bar{\boldsymbol{y}}_j$ and $\boldsymbol{x}_j$, and has a fixed size over all scales, independent of the original image size. From Theorem 1, this defines the Markov conditioning neighborhoods of the learned model. The effect of the RF size is examined in the numerical experiments of Section 4.

Imposing that the score is computed with a convolutional network further implies that the conditional probability $p(\bar{\boldsymbol{x}}_j|\boldsymbol{x}_j)$ is stationary on the wavelet sampling grid at the scale j. However, the RF

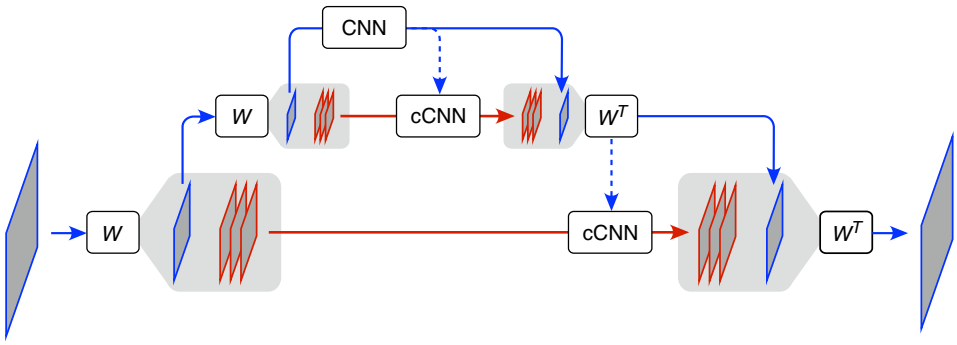

Figure 2: Wavelet conditional denoiser. The input noisy image $\boldsymbol{y}$ (lower left) is decomposed by recursive application of a fast orthogonal wavelet transform W into successive low-pass images $\boldsymbol{y}_j$ (blue) and three wavelet detail images $\bar{\boldsymbol{y}}_j$ (red). The coarsest low-pass image $\boldsymbol{y}_J$ is denoised with a CNN to estimate $\hat{\boldsymbol{x}}_J$. At all other scales, a conditional CNN (cCNN) estimates $\hat{\boldsymbol{x}}_j$ from $\hat{\boldsymbol{y}}_j$ conditioned on $\hat{\boldsymbol{x}}_j$, from which W^T recovers $\hat{\boldsymbol{x}}_{j-1}$.

of the low-pass CNN is designed to cover the entire image $\boldsymbol{x}_J$, and thus does not enforce local Markov conditioning nor stationarity. The product density (1) is therefore not stationary. Finally, we implement the CNNs using ReLUs without biases, so that $\nabla_{\bar{\boldsymbol{y}}_j} E_j(\bar{\boldsymbol{y}}_j|\boldsymbol{x}_j)$ has a linear growth in $\bar{\boldsymbol{y}}_j$ and $\boldsymbol{x}_j$. Thus, $E_j(\bar{\boldsymbol{y}}_j|\boldsymbol{x}_j)$ has at most a quadratic or bilinear growth in $\bar{\boldsymbol{y}}_j$ and $\boldsymbol{x}_j$, similarly to Gaussian models. Despite these strong simplifications, we shall see that these stationary Markov wavelet conditional models are capable of capturing complex long-range image dependencies in highly non-stationary image ensembles such as centered faces.

4 Markov Wavelet Conditional Denoising

We now evaluate our Markov wavelet conditional model on a denoising task. We use the previously learned CNNs to define a multi-scale denoising architecture, illustrated in Figure 2. The wavelet transform of the input noisy image $\boldsymbol{y}$ is computed up to a coarse-scale J. The coarsest scale image is denoised by applying the denoising CNN learned previously: $\hat{\boldsymbol{x}}_J = f_J(\boldsymbol{y}_J)$. Then for $J \geq j \geq 1$, we compute the denoised wavelet coefficients conditioned on the previously estimated coarse image: $\hat{\bar{\boldsymbol{x}}}_j = f(\bar{\boldsymbol{y}}_j, \hat{\boldsymbol{x}}_j)$. We then recover a denoised image at the next finer scale by applying an inverse wavelet transform: $\hat{\boldsymbol{x}}_{j-1} = W^T(\hat{\bar{\boldsymbol{x}}}_j, \hat{\boldsymbol{x}}_j)$. At the finest scale we recover a denoised image $\hat{\boldsymbol{x}}$.

Because of the orthogonality of W, the global MSE can be decomposed into a sum of wavelet MSE at each scale, plus the coarsest scale error: $\|\boldsymbol{x} - \hat{\boldsymbol{x}}\|^2 = \sum_{j=1}^{J-1} \|\bar{\boldsymbol{x}}_j - \hat{\bar{\boldsymbol{x}}}_j\|^2 + \|\boldsymbol{x}_J - \hat{\boldsymbol{x}}_J\|^2$. The global MSE thus summarizes the precision of the score models computed over all scales. We evaluate the peak signal-to-noise ratio (PSNR) of the denoised image as a function of the noise level, expressed as the PSNR of the noisy image. We use the CelebA dataset (Liu et al., 2015) at 160×160 resolution. We use the simplest of all orthogonal wavelet decompositions, the Haar wavelet, constructed from separable filters that compute averages and differences of adjacent pairs of pixel values (Haar, 1910). All denoisers are "blind" (they are not informed of the noise level) and "universal" (they can operate on images contaminated with noise of any standard deviation $\sigma \in [0, 1]$). They all have the same width and depth, and their receptive field is controlled by changing the convolutional kernel size of each layer. Appendix C provides architecture and training details.

Figure 3 shows that the multi-scale denoiser based on a conditional wavelet Markov model outperforms a conventional denoiser that implements a Markov probability model in the pixel domain. More precisely, we observe that when the Markov structure is defined over image pixels, the performance degrades considerably with smaller RFs (Figure 3, left panel). Images thus contain long-range global dependencies that cannot be captured by Markov models that are localized within the pixel grid. On the other hand, multi-scale denoising performance remains nearly the same for RF sizes down to 13×13, and degrades for 5×5 RFs at low noise levels, i.e., high PSNR (Figure 3, right panel). This is remarkable considering that, for the finest scale wavelet channels, this 5×5 RF implies

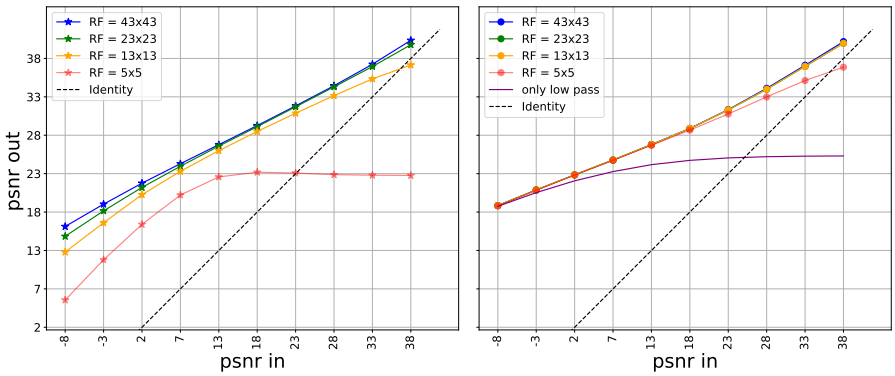

Figure 3: Comparison of denoiser performance on 160×160 test images from the CelebA dataset. **Left:** Conventional CNN denoisers with different RF sizes. **Right:** Multi-scale denoisers with different cCNN RF sizes. Note that the coarse-scale RF is 43×43 in all cases.

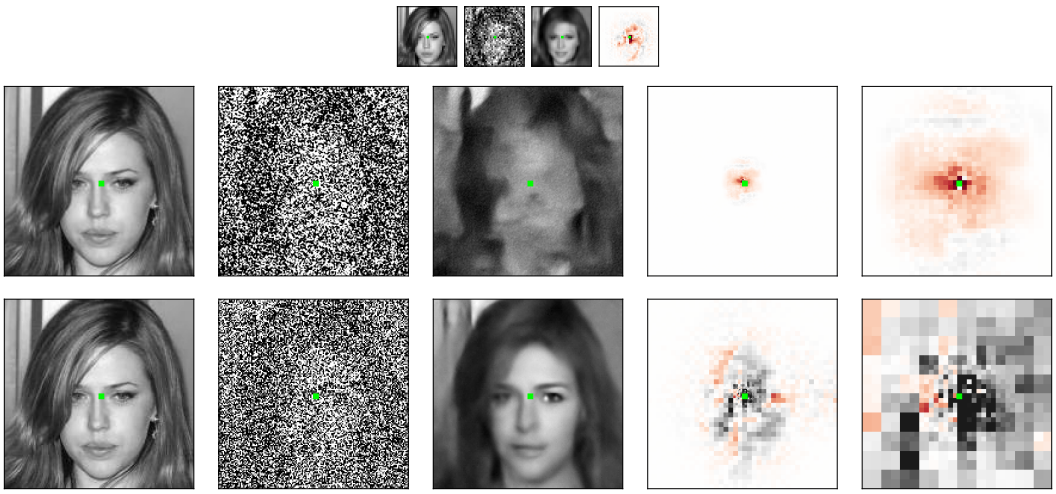

Figure 4: Denoising examples. Each row shows clean image, noisy image, denoised image, and the adaptive filter (one row of the Jacobian of the end-to-end denoising transformation), used by the denoiser to estimate a specific pixel, shown in green. The heat-map ranges from red for most negative to black for most positive values. Last column shows an enlargement of this adaptive filter, for enhanced visibility. **Top row:** 40×40 images estimated with a CNN denoiser with RF 43×43. **Second row:** 160×160 images estimated with a CNN denoiser with RF 43×43. **Third row:** 160×160 images,estimated with the proposed conditional multi-scale denoiser of Figure 2. The denoiser uses a 43×43 RF for the coarsest scale, and 13×13 RFs for conditional denoising of subsequent finer scales.

conditioning on less than three percent of the coefficients. The wavelet conditional score model thus successfully captures long-range image dependencies, even with small Markov neighborhoods.

It is also worth noting that in the high noise regime (i.e., low PSNR), a multi-scale denoiser with RF as small as 13×13 significantly outperforms the conventional denoiser with the largest tested RF size (43×43). The dependency on RF in this regime demonstrates the inadequacy of local modeling in the pixel domain. On the contrary, the effective neighborhoods of the multi-scale denoiser are spatially global, but operate with spatially-varying resolution. Specifically, neighborhoods are of fixed size at each scale, but due to the subsampling, cover larger proportions of the image at coarser scales. The CNN applied to the coarsest low-pass band (scale J) is spatially global, and the denoising of this band alone explains the performance at the highest noise levels (magenta curve, Figure 3).

To further illustrate this point, consider denoising examples shown in Figure 4. Since all denoisers are bias-free, i.e., convolution operations are linear, with no additive constants, and batch-normalization does not remove the mean, they are piecewise linear (as opposed to piecewise affine (Mohan* et al., 2020)), providing some interpretability. Specifically, each denoised pixel is computed as an adaptively weighted sum over the noise input pixels. The associated image of weights provides a means of visualizing the associated row of the Jacobian. The last panels show the equivalent adaptive linear filter that was used to estimate the pixel marked by the green square. The top row shows denoising results of a conventional non-multi-scale CNN denoiser for images that are roughly the size of the network RF. Despite very heavy noise levels, the denoiser exploits the global structure of the image (the adaptive filter is roughly the size of the entire image), and produces a result approximating the clean image. The second row shows the results after training the same denoiser architecture on much larger images. Now the adaptive filter is much smaller than the image, and the denoiser solution fails to capture the global structure of the face. Finally, the last row shows that the multi-scale wavelet conditional denoiser can successfully approximate the global structure of a face and some detail despite the extreme levels of noise. Removing high levels of noise requires knowledge of global structure. In our multi-scale conditional denoiser, this is achieved by setting the RF size of the terminal denoiser equal or larger than the low-pass image, similarly to the denoiser shown on the top row. Then, each successive conditioning stage provides information at a finer resolution, over ever smaller RFs relative to the pixel grid. The adaptive filter shown in the last column is *foveated*: the estimate of the marked pixel depends on all pixels in the noisy image, but those that are farther away are only included within averages over larger blocks. Thus, imposing locality in wavelet domain lifts the curse of dimensionality without loss of performance, whereas a locality (Markov) assumption in the pixel domain results in diminished performance.

5 MARKOV WAVELET CONDITIONAL SYNTHESIS

We generate samples from the learned wavelet conditional distributions in order to visually assess the quality of the model in performing a super-resolution task. We compare this with solving the super-resolution inverse problem directly using a CNN denoiser operating in the pixel domain.

We first give a high-level description of our conditional generation algorithm. The low-resolution image $\boldsymbol{x}_J$ is used to conditionally generate wavelet coefficients $\bar{\boldsymbol{x}}_J$ from the conditional distribution $p(\bar{\boldsymbol{x}}_J|\boldsymbol{x}_J)$. An inverse wavelet transform next recovers a higher-resolution image $\boldsymbol{x}_{J-1}$ from both $\boldsymbol{x}_J$ and $\bar{\boldsymbol{x}}_J$. The conditional generation and wavelet reconstruction are repeated J times, increasing the resolution of the sample at each step. In the end, we obtain a sample $\boldsymbol{x}$ from the full-resolution image distribution conditioned on the starting low-resolution image $p(\boldsymbol{x}|\boldsymbol{x}_J)$. $\boldsymbol{x}$ is thus a stochastic super-resolution estimate of $\boldsymbol{x}_J$.

To draw samples from the distributions $p(\bar{\boldsymbol{x}}_j|\boldsymbol{x}_j)$ implicitly embedded in the wavelet conditional denoisers, we use the algorithm defined in Kadkhodaie & Simoncelli (2021), which performs gradient ascent on the log-probability obtained from the CNN or cCNN using eq. (5). This is similar to score-based diffusion algorithms (Song & Ermon, 2019; Song et al., 2021; Ho et al., 2020), but the timestep hyper-parameters require essentially no tuning, since stepsizes are automatically obtained from the magnitude of the estimated score. Extension to the conditional case is straightforward. The sampling algorithm is detailed in Appendix D. The low-pass denoiser has RF of size 43×43 and all the cCCN have RF 13×13. Train and test images are are 320×320 images from the CelebA HQ dataset (Karras et al., 2018).

Because the wavelet conditional denoiser has a small RF size, the samples are generated from a model with Markov wavelet conditional distributions. We compare these with samples from a model with a local Markov assumption in the pixel domain. This is done using a CNN with a 43×43 RF trained to denoise full-resolution images, which approximates the score $\nabla \log p(\boldsymbol{x})$. Given the same coarse-scale image $\boldsymbol{x}_J$, we can generate samples from $p(\boldsymbol{x}|\boldsymbol{x}_J)$ by viewing this as sampling from the image distribution of $\boldsymbol{x}$ constrained by a linear measurements $\boldsymbol{x}_J$. This is done with the same sampling algorithm of Kadkhodaie & Simoncelli (2021), with a small modification, again described in Appendix D.

For visual evaluation, Figure 5 shows conditional super-resolution samples from these two learned image models. The local Markov model in the pixel domain generates details that are sharp but artifactual and incoherent over long spatial distances. On the other hand, the Markov wavelet condi-

Figure 5: Super-resolution examples. **Columns, from left to right:** three original images, 320×320 pixels. Low-pass image of a 3-stage wavelet decomposition (downsampled to 40×40, expanded to full size for viewing). Conditional generation of full-resolution images using CNN denoiser with RF of size 43×43. Coarse-to-fine conditional generation using the multi-scale conditional denoisers, each with RF size 13×13. Additional examples are shown in Appendix E.

tional model produces much more natural-looking high-resolution face images. This demonstrates the validity of our model: although these face images are not stationary (they have global structures shared across the dataset), and are not Markov in the pixel domain (there are clearly long-range dependencies that operate across the image), the details can be captured with local stationary Markov wavelet conditional distributions.

We now perform full synthesis from the Markov wavelet conditional model. We construct the score of the 40×40 terminal low-pass channel, $\nabla_{\boldsymbol{x}_J} \log p(\boldsymbol{x}_J)$, using a CNN with RF of that size. Unlike the conditional wavelet stages, this architectural choice does not enforce any local Markov conditioning nor stationarity. The RF is also larger than the scale of global non-stationary structures, such as the overall face contour, which cannot be modeled with stationary distributions.

The first image in Figure 6 is generated from the low-pass denoiser (see Appendix D for the sampling algorithm). We can see that the image successfully captures the coarse structure of a face, made possible because the denoiser is non-stationary, with a global RF covering the extent of the low-pass image. This image is then refined by application of successive stages of the multi-scale super-resolution synthesis algorithm described above. The next three images in Figure 6 show successively higher resolution images generated in the procedure. For comparison, the last image in Figure 6 shows a sample generated using a conventional CNN denoiser. Once again, this illustrates that assuming spatially localized Markov property on the pixel grid and estimating the score with a CNN with RF smaller than the image fails to capture the non-stationary distribution of faces. Specifically, the model is unable to generate structures larger than the RF size, and the samples are texture-like and composed of local regions resembling face parts.

We note that the quality of the generated images is not on par with the most recent score-based diffusion methods (Ramesh et al., 2022; Saharia et al., 2022; Rombach et al., 2022). These methods also perform iterative super-resolution of an initial coarse-scale sample. The initial sample is generated with a very large network (much larger than ours), and each scale-wise denoiser is itself a U-Net, with associated RF that is the entire image. Thus, the implicit probability models appear to be

Figure 6: Image synthesis. **Left four images:** Multi-scale synthesis. Synthesized face images at four resolutions, from coarse-scale only (left) to all scales (right). **Right image:** Synthesis using a convolutional CNN with a receptive field smaller than the synthesized image.

global, and it is an open question whether and how these architectures are able to escape the curse of dimensionality. Our local conditional Markov assumptions provide a step towards the goal of making explicit the probability model and its factorization.

6 Discussion

We have generalized a Markov wavelet conditional probability model of image distributions, and developed an explicit implementation using conditional CNNs to estimate the conditional model scores. The resulting conditional wavelet distributions are stationary and Markov over neighborhoods corresponding to the cCNN receptive fields. We trained this model on a dataset of face images, which are non-stationary with large-scale geometric features. We find that the model, even with relatively small cCNN RFs, succeeds in capturing these features, producing high-quality results on denoising and super-resolution tasks. We contrast this with local Markov models in the pixel domain, which are not able to capture these features, and are instead limited to stationary ergodic textures.

There are several avenues for improving our model. First, the Haar wavelet is a convenient choice, having very small filters that do not require special handling (e.g., zero-padding) at image boundaries. On the other hand, they are known to produce significant aliasing and blocking artifacts, and are rarely used in image processing applications. Although we do not observe such artifacts here, use of a wavelet with a larger filter size could potentially improve the results. Second, we trained our conditional wavelet denoisers separately, each conditioned on a clean copy of the corresponding low-pass channel. As a result, the multi-scale denoiser of Figure 2 is not optimal. One might expect improved denoising performance from a model in which the full set of wavelet cCNNs, as well as the low-pass CNN, were trained jointly and simultaneously for image denoising ("end-to-end").

Although we set out to understand how factorization of density models could allow them to avoid the curse of dimensionality in training, it is worth noting that the dimensionality of the conditioning neighborhoods in our network is still uncomfortably high ($4 \times 13 \times 13 = 676$). Although this is reduced by a factor of roughly 150 relative to the image size ($320 \times 320 = 102,400$), and this dimensionality remains constant even if this image size is increased, it is still not sufficient to explain how the conditional score can be trained with realistic amounts of data. In addition, the terminal low-pass CNN operates globally (dimensionality $40 \times 40 = 1600$). The question of how to further reduce the overall dimensionality of the model remains open.

Our experiments were performed on face images, which present a particular challenge given their obvious non-stationarity. The conditional models are approximately stationary due to the fully convolutional structure of the cCNN operations (although this is partially violated by zero-padded boundary handling). As such, the non-stationary capabilities of the full model arise primarily from the terminal low-pass CNN, which uses spatially global RFs. We speculate that for more diverse image datasets (e.g., a large set of natural images), a much larger capacity low-pass CNN will be needed to capture their global structures. This is consistent with current deep networks that generate high-quality synthetic images (Ramesh et al., 2022; Saharia et al., 2022; Rombach et al., 2022). On the other hand, the cCNNs in our model all share the same architecture and local RF, and may (empirically) be capturing similar local conditional structure at each scale. Forcing them to represent the same conditional density (through weight sharing) would impose a scale invariance assumption on the overall model. This would further reducing model complexity, and enable synthesis and inference on images of arbitrary size, effectively generalizing beyond the training size.

REFERENCES

R W Buccigrossi and E P Simoncelli. Image compression via joint statistical characterization in the wavelet domain. *IEEE Trans Image Proc*, 8(12):1688–1701, Dec 1999. doi: 10.1109/83.806616.

A. Chambolle, R. A. DeVore, and B. J. Lucier N. Lee. Nonlinear wavelet image processing: Variational problems, compression, and noise removal through wavelet shrinkage. *IEEE Trans Image Processing*, 7:319–335, March 1998.

Tianshui Chen, Liang Lin, Wangmeng Zuo, Xiaonan Luo, and Lei Zhang. Learning a wavelet-like auto-encoder to accelerate deep neural networks. In *Proceedings of the AAAI Conference on Artificial Intelligence*, volume 32, 2018.

P Clifford and JM Hammersley. Markov fields on finite graphs and lattices. 1971.

Regev Cohen, Yochai Blau, Daniel Freedman, and Ehud Rivlin. It has potential: Gradient-driven denoisers for convergent solutions to inverse problems. *Advances in Neural Information Processing Systems*, 34:18152–18164, 2021.

L Şendur and I W Selesnick. Bivariate shrinkage functions for wavelet-based denoising exploiting interscale dependency. 50(11):2744–2756, November 2002.

Yan-Qiu Cui and Ke Wang. Markov random field modeling in the wavelet domain for image denoising. In *2005 International Conference on Machine Learning and Cybernetics*, volume 9, pp. 5382–5387. IEEE, 2005.

Prafulla Dhariwal and Alex Nichol. Diffusion models beat GAN on image synthesis. *arXiv preprint arXiv:2105.05233*, 2021.

Roland L'vovich Dobrushin. The description of the random field by its conditional distributions and its regularity conditions. *Teoriya Veroyatnostei i ee Primeneniya*, 13(2):201–229, 1968.

Rinon Gal, Dana Cohen Hochberg, Amit Bermano, and Daniel Cohen-Or. Swagan: A style-based wavelet-driven generative model. *ACM Transactions on Graphics (TOG)*, 40(4):1–11, 2021.

S Geman and D Geman. Stochastic relaxation, gibbs distibutions, and bayesian restoration of images. 6:721–741, November 1984.

Ian Goodfellow, Jean Pouget-Abadie, Mehdi Mirza, Bing Xu, David Warde-Farley, Sherjil Ozair, Aaron Courville, and Yoshua Bengio. Generative adversarial networks. *Communications of the ACM*, 63(11):139–144, 2020.

Florentin Guth, Simon Coste, Valentin De Bortoli, and Stephane Mallat. Wavelet score-based generative modeling. *arXiv preprint arXiv:2208.05003*, 2022.

A Haar. Zur theorie der orthogonalen funktionensysteme. *Math Annal.*, 69:331–371, 1910.

Jonathan Ho, Ajay Jain, and Pieter Abbeel. Denoising diffusion probabilistic models. *Advances in Neural Information Processing Systems*, 2020.

Jonathan Ho, Chitwan Saharia, William Chan, David J Fleet, Mohammad Norouzi, and Tim Salimans. Cascaded diffusion models for high fidelity image generation. *J. Mach. Learn. Res.*, 23:47–1, 2022.

Z Kadkhodaie and E P Simoncelli. Stochastic solutions for linear inverse problems using the prior implicit in a denoiser. In *Adv. Neural Information Processing Systems (NeurIPS*21)*, volume 34. Curran Associates, Inc., Dec 2021.

Tero Karras, Timo Aila, Samuli Laine, and Jaakko Lehtinen. Progressive growing of gans for improved quality, stability, and variation. arxiv 2017. *arXiv preprint arXiv:1710.10196*, pp. 1–26, 2018.

Bahjat Kawar, Gregory Vaksman, and Michael Elad. Snips: Solving noisy inverse problems stochastically. *Advances in Neural Information Processing Systems*, 34:21757–21769, 2021.

Diederik P Kingma and Max Welling. Auto-encoding variational bayes. *arXiv preprint arXiv:1312.6114*, 2013.

Rémi Laumont, Valentin De Bortoli, Andrés Almansa, Julie Delon, Alain Durmus, and Marcelo Pereyra. Bayesian imaging using plug & play priors: when langevin meets tweedie. *SIAM Journal on Imaging Sciences*, 15(2):701–737, 2022.

Shuo-Hui Li. Learning non-linear wavelet transformation via normalizing flow. *arXiv preprint arXiv:2101.11306*, 2021.

Ziwei Liu, Ping Luo, Xiaogang Wang, and Xiaoou Tang. Deep learning face attributes in the wild. In *Proceedings of International Conference on Computer Vision (ICCV)*, December 2015.

Maurits Malfait and Dirk Roose. Wavelet-based image denoising using a markov random field a priori model. *IEEE Transactions on image processing*, 6(4):549–565, 1997.

Stéphane Mallat. *A wavelet tour of signal processing: the sparse way*. Academic Press, 2009.

Tanguy Marchand, Misaki Ozawa, Giulio Biroli, and Stéphane Mallat. Wavelet conditional renormalization group. *arXiv preprint arXiv:2207.04941*, 2022.

M K Mihçak, I Kozintsev, K Ramchandran, and P Moulin. Low-complexity image denoising based on statistical modeling of wavelet coefficients. *IEEE Trans Signal Processing*, 6(12):300–303, December 1999.

K Miyasawa. An empirical Bayes estimator of the mean of a normal population. *Bull. Inst. Internat. Statist.*, 38:181–188, 1961.

S Mohan*, Z Kadkhodaie*, E P Simoncelli, and C Fernandez-Granda. Robust and interpretable blind image denoising via bias-free convolutional neural networks. In *Int'l Conf on Learning Representations (ICLR)*, Addis Ababa, Ethiopia, April 2020. URL `https://arxiv.org/abs/1906.05478`. Available at https://arxiv.org/abs/1906.05478.

Aditya Ramesh, Prafulla Dhariwal, Alex Nichol, Casey Chu, and Mark Chen. Hierarchical Text-Conditional Image Generation with CLIP Latents. *arXiv e-prints*, art. arXiv:2204.06125, April 2022.

Danilo Rezende and Shakir Mohamed. Variational inference with normalizing flows. In *International conference on machine learning*, pp. 1530–1538. PMLR, 2015.

Robin Rombach, Andreas Blattmann, Dominik Lorenz, Patrick Esser, and Björn Ommer. High-resolution image synthesis with latent diffusion models. In *Proceedings of the IEEE/CVF Conference on Computer Vision and Pattern Recognition*, pp. 10684–10695, 2022.

J. Romberg, H. Choi, and R. Baraniuk. Bayesian tree-structured image modeling using wavelet-domain hidden Markov models. *IEEE Trans Image Processing*, 10(7), July 2001.

Olaf Ronneberger, Philipp Fischer, and Thomas Brox. U-net: Convolutional networks for biomedical image segmentation. In *International Conference on Medical image computing and computer-assisted intervention*, pp. 234–241. Springer, 2015.

Chitwan Saharia, Jonathan Ho, William Chan, Tim Salimans, David J Fleet, and Mohammad Norouzi. Image super-resolution via iterative refinement. *arXiv preprint arXiv:2104.07636*, 2021.

Chitwan Saharia, William Chan, Saurabh Saxena, Lala Li, Jay Whang, Emily Denton, Seyed Kamyar Seyed Ghasemipour, Burcu Karagol Ayan, S Sara Mahdavi, Rapha Gontijo Lopes, et al. Photorealistic text-to-image diffusion models with deep language understanding. *arXiv preprint arXiv:2205.11487*, 2022.

David Sherrington and Scott Kirkpatrick. Solvable Model of a Spin-Glass. , 35(26):1792–1796, December 1975. doi: 10.1103/PhysRevLett.35.1792.

Yang Song and Stefano Ermon. Generative modeling by estimating gradients of the data distribution. *Advances in Neural Information Processing Systems*, 32, 2019.

Yang Song, Jascha Sohl-Dickstein, Diederik P. Kingma, Abhishek Kumar, Stefano Ermon, and Ben Poole. Score-based generative modeling through stochastic differential equations. In *International Conference on Learning Representations*, 2021.

Pascal Vincent. A connection between score matching and denoising autoencoders. *Neural Computation*, 23(7):1661–1674, 2011.

M J Wainwright, E P Simoncelli, and A S Willsky. Random cascades on wavelet trees and their use in modeling and analyzing natural imagery. *Applied and Computational Harmonic Analysis*, 11(1): 89–123, Jul 2001. doi: 10.1117/12.408598.

Kenneth G Wilson. Renormalization group and critical phenomena. ii. phase-space cell analysis of critical behavior. *Physical Review B*, 4(9):3184, 1971.

Jason J Yu, Konstantinos G Derpanis, and Marcus A Brubaker. Wavelet flow: Fast training of high resolution normalizing flows. *Advances in Neural Information Processing Systems*, 33:6184–6196, 2020.

Kai Zhang, Wangmeng Zuo, Yunjin Chen, Deyu Meng, and Lei Zhang. Beyond a Gaussian denoiser: Residual learning of deep CNN for image denoising. *IEEE Trans. Image Processing*, 26(7): 3142–3155, 2017.

A Proof of Theorem 1

To simplify notation, we drop the j subscript. Let I (resp. J) denote the set of indices of pixel values of $\bar{\boldsymbol{x}}$ (resp. $\boldsymbol{x}$). If S is a set of indices, we denote $\bar{\boldsymbol{x}}(S) = (\bar{\boldsymbol{x}}(i))_{i \in S \cap I}$. Let G be a graph whose nodes are $I \cup J$. For each $i \in I$, let $N(i) \subseteq I \cup J$ be the neighborhood of node i, with $i \notin N(i)$, and $N_+(i) = N(i) \cup \{i\}$.

To prove Theorem 1, we need to show that the local Markov property:

$$\forall i \in I,\ p\big(\bar{\boldsymbol{x}}(i) \,\big|\, \bar{\boldsymbol{x}}(I \setminus \{i\}), \boldsymbol{x}\big) = p\big(\bar{\boldsymbol{x}}(i) \,\big|\, \bar{\boldsymbol{x}}(N(i)), \boldsymbol{x}(N_+(i))\big), \tag{6}$$

is equivalent to the conditional score being computable with RFs restricted to neighborhoods:

$$\forall i \in I,\ \frac{\partial \log p}{\partial \bar{\boldsymbol{x}}(i)}\big(\bar{\boldsymbol{x}} \,\big|\, \boldsymbol{x}\big) = f_i\big(\bar{\boldsymbol{x}}(N_+(i)), \boldsymbol{x}(N_+(i))\big), \tag{7}$$

for some functions f_i.

We first prove that eq. (6) implies eq. (7). Let $i \in I$. We have the following factorization of the probability distribution:

$$\begin{aligned} p\big(\bar{\boldsymbol{x}} \,\big|\, \boldsymbol{x}\big) &= p\big(\bar{\boldsymbol{x}}(i) \,\big|\, \bar{\boldsymbol{x}}(I \setminus \{i\}), \boldsymbol{x}\big)\, p\big(\bar{\boldsymbol{x}}(I \setminus \{i\}) \,\big|\, \boldsymbol{x}\big) \\ &= p\big(\bar{\boldsymbol{x}}(i) \,\big|\, \bar{\boldsymbol{x}}(N(i)), \boldsymbol{x}(N_+(i))\big)\, p\big(\bar{\boldsymbol{x}}(I \setminus \{i\}) \,\big|\, \boldsymbol{x}\big), \end{aligned}$$

where we have used eq. (6) in the last step. Then, taking the logarithm and differentiating, only the first term remains:

$$\frac{\partial \log p}{\partial \bar{\boldsymbol{x}}(i)}\big(\bar{\boldsymbol{x}} \,\big|\, \boldsymbol{x}\big) = \frac{\partial \log p}{\partial \bar{\boldsymbol{x}}(i)}\big(\bar{\boldsymbol{x}}(i) \,\big|\, \bar{\boldsymbol{x}}(N(i)), \boldsymbol{x}(N_+(i))\big),$$

which proves eq. (7).

Reciprocally, we now prove that eq. (7) implies eq. (6). Let $i \in I$, and $\boldsymbol{\delta}_i(j) = \delta_{ij}$. We have, by integrating the partial derivative:

$$\begin{aligned} \log p\big(\bar{\boldsymbol{x}} \,\big|\, \boldsymbol{x}\big) &= \log p\big(\bar{\boldsymbol{x}} - \bar{\boldsymbol{x}}(i)\boldsymbol{\delta}_i \,\big|\, \boldsymbol{x}\big) - \int_0^{\bar{\boldsymbol{x}}(i)} \frac{\partial \log p}{\partial \bar{\boldsymbol{x}}(i)}\big(\bar{\boldsymbol{x}} - t\boldsymbol{\delta}_i \,\big|\, \boldsymbol{x}\big)\mathrm{d}t \\ &= \log p\big(\bar{\boldsymbol{x}} - \bar{\boldsymbol{x}}(i)\boldsymbol{\delta}_i \,\big|\, \boldsymbol{x}\big) - \int_0^{\bar{\boldsymbol{x}}(i)} f_i\big(\bar{\boldsymbol{x}}(N_+(i)) - t\boldsymbol{\delta}_i, \boldsymbol{x}(N_+(i))\big)\mathrm{d}t, \end{aligned}$$

where we have used eq. (7) in the last step. Note that the first term does not depend on $\bar{\boldsymbol{x}}(i)$, while the second term only depends on $\bar{\boldsymbol{x}}(N_+(i))$ and $\boldsymbol{x}(N_+(i))$. This implies that when we condition on $\bar{\boldsymbol{x}}(N(i))$ and $\boldsymbol{x}(N_+(i))$, the density factorizes as a term which only involves $\bar{\boldsymbol{x}}(i)$ and a term which does not involve $\bar{\boldsymbol{x}}(i)$. This further implies conditional independence and thus eq. (6).

B PROOF OF EQUATION5

Miyasawa's result, while surprising, is easily proven (Miyasawa, 1961). The observation distribution, $p(\boldsymbol{y})$ is achieved by marginalizing $p(\boldsymbol{y}, \boldsymbol{x})$:

$$p(\boldsymbol{y}) = \int p(\boldsymbol{y}|\boldsymbol{x})p(\boldsymbol{x})\mathrm{d}\boldsymbol{x} = \int g(\boldsymbol{y} - \boldsymbol{x})p(\boldsymbol{x})\mathrm{d}\boldsymbol{x},$$

where the noise distribution $g(\boldsymbol{z})$ is assumed Gaussian. The gradient of the observation density of Eq. (B) is then:

$$\nabla_{\boldsymbol{y}}\, p(\boldsymbol{y}) = \frac{1}{\sigma^2}\int (\boldsymbol{x} - \boldsymbol{y})g(\boldsymbol{y} - \boldsymbol{x})p(\boldsymbol{x})\mathrm{d}\boldsymbol{x} = \frac{1}{\sigma^2}\int (\boldsymbol{x} - \boldsymbol{y})p(\boldsymbol{y}, \boldsymbol{x})\mathrm{d}\boldsymbol{x}.$$

Multiplying both sides by $\sigma^2/p(\boldsymbol{y})$ and separating the right side into two terms gives:

$$\sigma^2 \frac{\nabla_{\boldsymbol{y}}\, p(\boldsymbol{y})}{p(\boldsymbol{y})} = \int \boldsymbol{x}p(\boldsymbol{x}|\boldsymbol{y})\mathrm{d}\boldsymbol{x} - \int \boldsymbol{y}p(\boldsymbol{x}|\boldsymbol{y})\mathrm{d}\boldsymbol{x} = \hat{\boldsymbol{x}}(\boldsymbol{y}) - \boldsymbol{y}.$$

C DETAILS OF TRAINING AND ARCHITECTURE

The terminal low-pass CNN and all cCNNs are bias-free. A convolutional neural net can be made bias-free by removing all additive constants from convolution operations and batch-normalizations (i.e., division by standard deviation without subtracting the mean) (Mohan* et al., 2020). All networks contain 21 convolutional layers with no subsampling, each consisting of 64 channels. Each layer, except for first and last, is followed by a ReLU non-linearity and bias-free batch normalization. Thus, the transformation is both homogeneous (of order 1) and translation-invariant (apart from handling of boundaries), at each scale. All convolutional kernels in the low-pass CNN are 3×3, resulting in a 43×43 RF and $665,856$ parameters in total. Convolutional kernels in the cCNNs are adjusted to achieve different RF sizes. For example, a 13×13 RF arises from choosing 3×3 kernels in every 4th layer and 1×1 (i.e., pointwise linear combinations across all channels) for the rest, resulting in a total of $214,144$ parameters. For comparison, we also trained a conventional (non-multi-scale) CNN for denoising. We used the same architecture as for the coarsest scale band of the multi-scale denoiser: 21 bias-free convolutional layers with no subsampling.

For experiments shown in Figure 3 and Figure 4, we use $202,499$ training and 100 test images of resolution 160×160 from the CelebA dataset (Liu et al., 2015). For experiments shown in Figure 5, Figure 8 and Figure 6 we use $29,900$ train and 100 test images, drawn from the CelebA HQ dataset (Karras et al., 2018) at 320×320 resolution.

D WAVELET CONDITIONAL SYNTHESIS ALGORITHM

Sampling from both the CNN and cCNN denoisers is achieved using a slightly modified version of the algorithm of Kadkhodaie & Simoncelli (2021), as defined in Algorithm 1. This method uses only three hyperparameters, and their settings are more forgiving than those of backward SDE discretization parameters in score-based diffusions. They consist of initial and final noise levels, as well as a step size parameter $h \in [0, 1]$ which controls the trade-off between computational efficiency and visual quality. For the examples in Figure 5, Figure 8 and Figure 6, we chose $h = 0.01$, $\sigma_0 = 1$, and σ_∞ is set to 0.0002.

Image synthesis is initialized with a terminal low-pass image (either sampled from the associated CNN, or computed from a test image), and successively sampling from the wavelet conditional distributions at each scale, as defined in Algorithm 2.

E ADDITIONAL SUPER-RESOLUTION EXAMPLES

Figure 7: Additional super-resolution examples. See caption of Fig. 8.

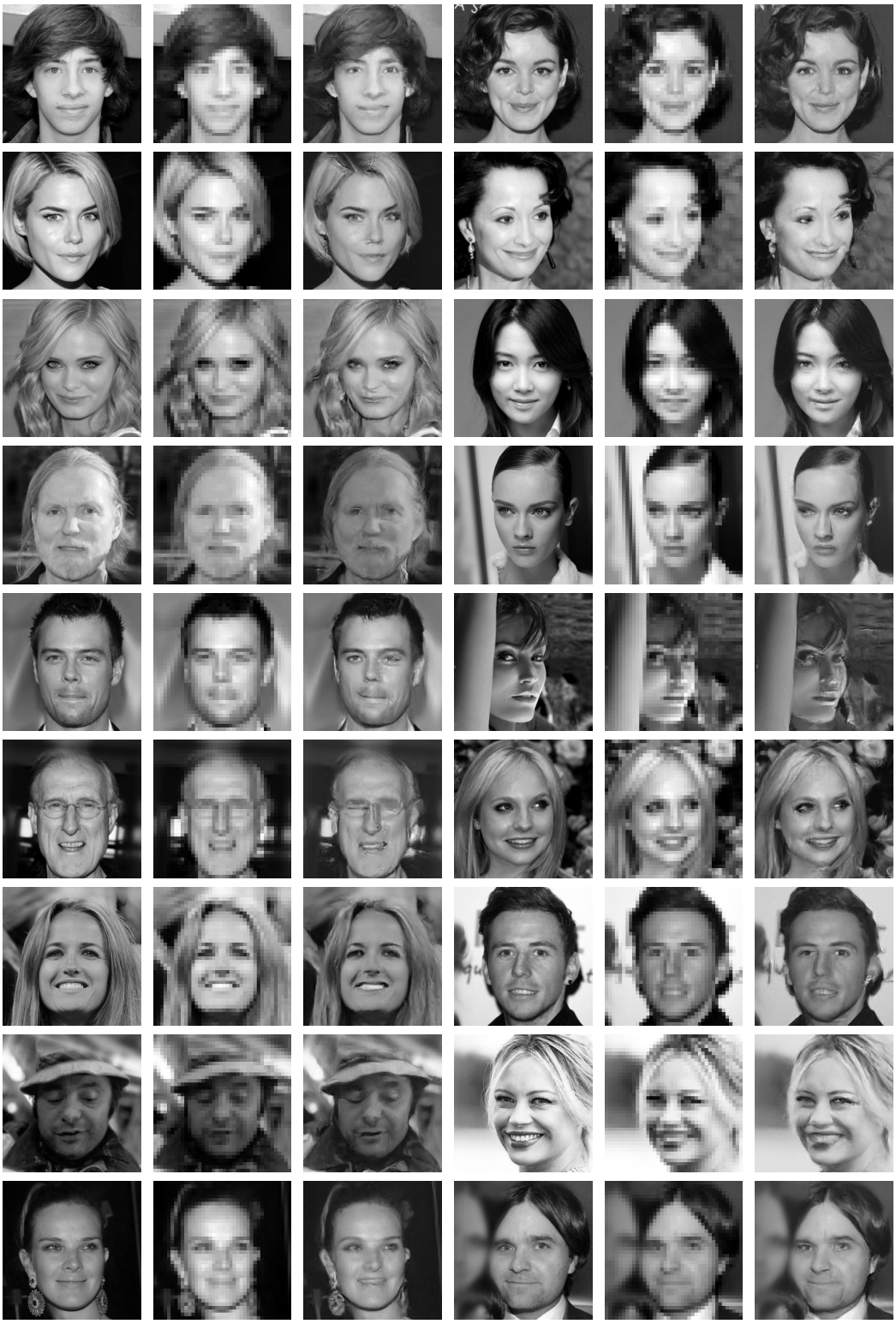

Figure 8: Additional super-resolution examples. **Columns, in groups of three, from left to right:** original images, 320×320 pixels. Low-pass images of corresponding 3-stage wavelet decomposition (downsampled to 40×40, expanded to full size for viewing). Coarse-to-fine conditional generation using the multi-scale conditional denoisers, each with RF size 13×13.

Algorithm 1 Sampling via ascent of the log-likelihood gradient from a denoiser residual

Require: denoiser f, step size h, initial noise level σ_0, final noise level σ_∞

$t = 0$
Draw $\boldsymbol{x}_0 \sim \mathcal{N}(0, \sigma_0^2 \mathrm{Id})$
while $\sigma_t \geq \sigma_\infty$ **do**
  $t \leftarrow t + 1$
  $\boldsymbol{d}_t \leftarrow f(\boldsymbol{x}_{t-1}) - \boldsymbol{x}_{t-1}$ ▷ Compute the score from the denoiser residual
  $\sigma_t^2 \leftarrow ||d_t||^2/N$ ▷ Compute the current noise level for stopping criterion
  $\boldsymbol{x}_t \leftarrow \boldsymbol{x}_{t-1} + h\boldsymbol{d}_t$ ▷ Perform a partial denoiser step to remove a fraction of the noise
end while
return $\boldsymbol{x}_t$

Algorithm 2 Wavelet Conditional Synthesis

Require: number of scales J, low-pass image $\boldsymbol{x}_J$, conditional denoisers $(f_j)_{1 \leq j \leq J}$, step size h, initial noise level σ_0, final noise level σ_∞

for $j \in \{J, \ldots, 1\}$ **do**
  $\bar{\boldsymbol{x}}_j \leftarrow \mathrm{DrawSample}(f_j(\cdot, \boldsymbol{x}_j), h, \sigma_0, \sigma_\infty)$ ▷ Wavelet conditional sampling
  $\boldsymbol{x}_{j-1} \leftarrow W^T(\bar{\boldsymbol{x}}_j, \boldsymbol{x}_j)$ ▷ Wavelet reconstruction
end for
return $\boldsymbol{x}_0$