Unifying Information Extraction with Latent Adaptive Structure-aware Generative Language Model

Hao Fei [1] **Shengqiong Wu** [1] **Libo Qin** [1] **Jingye Li** [2] **Bobo Li** [2]
Fei Li [2] **Meishan Zhang** [3*] **Min Zhang** [3] **Tat-Seng Chua** [1]
[1] Sea-NExT Joint Lab, School of Computing, National University of Singapore
[2]Wuhan University [3] Harbin Institute of Technology (Shenzhen)
haofei37@nus.edu.sg swu@u.nus.edu liboqin@nus.edu.sg
{theodorelee, boboli, lifei_csnlp}@whu.edu.cn
mason.zms@gmail.com zhangmin2021@hit.edu.cn dcscts@nus.edu.sg

Abstract

Universally modeling all typical information extraction tasks (UIE) with one generative language model (GLM) has revealed great potential by the latest study, where various IE predictions are unified into a linearized hierarchical expression under a GLM. Syntactic structure information, a type of effective feature which has been extensively utilized in IE community, should also be beneficial to UIE. In this work, we propose a novel structure-aware GLM, fully unleashing the power of syntactic knowledge for UIE. A heterogeneous structure inductor is explored to unsupervisedly induce rich heterogeneous structural representations by post-training an existing GLM. In particular, a structural broadcaster is devised to compact various latent trees into explicit high-order forests, helping to guide a better generation during decoding. We finally introduce a task-oriented structure fine-tuning mechanism, further adjusting the learned structures to most coincide with the end-task's need. Over 12 IE benchmarks across 7 tasks our system shows significant improvements over the baseline UIE system. Further in-depth analyses show that our GLM learns rich task-adaptive structural bias that greatly resolves the UIE crux, the *long-range dependence issue* and *boundary identifying*.

1 Introduction

Information extraction (IE) is widely considered as one of the most kernel topics in natural language processing (NLP), which is defined as to identify the desired structural information from the unstructured texts [4, 63, 47, 44, 39, 29, 15]. There is a variety of IE and IE-derived tasks, yet all of which revolves around predicting two key elements: *mention spans* or/and *their semantic relations*. For example as in Fig. 1(b), NER detects the mention spans, while RE recognizes each possible mention and its associated mention with relation. In this regard, all the existing IE jobs can be reduced into three prototypes: span extraction, pair extraction and hyper-pair extraction, as depicted in Fig. 1(a).

In the era of deep learning, IE witnesses extraordinary developments, where especially the recent triumph of pre-trained language models (LMs) helps push the state-of-the-art (SoTA) IE performances amazingly [10, 3, 25, 80, 73]. Prior related works mostly design particular models for certain IE tasks in isolation; while the latest SoTA progress [42] is achieved by unifying all IE tasks with a single encoder-decoder GLM, i.e., UIE. As different IE tasks essentially share the similar nature (i.e., modeling span and relation features), it is proven that universally modeling multiple IE tasks helps further learning of general sharable knowledge from varying task sources, which makes UIE great potentials in real-world scenarios. In this work we inherit this wisdom and also focus on UIE.

*Corresponding Author: Meishan Zhang

36th Conference on Neural Information Processing Systems (NeurIPS 2022).

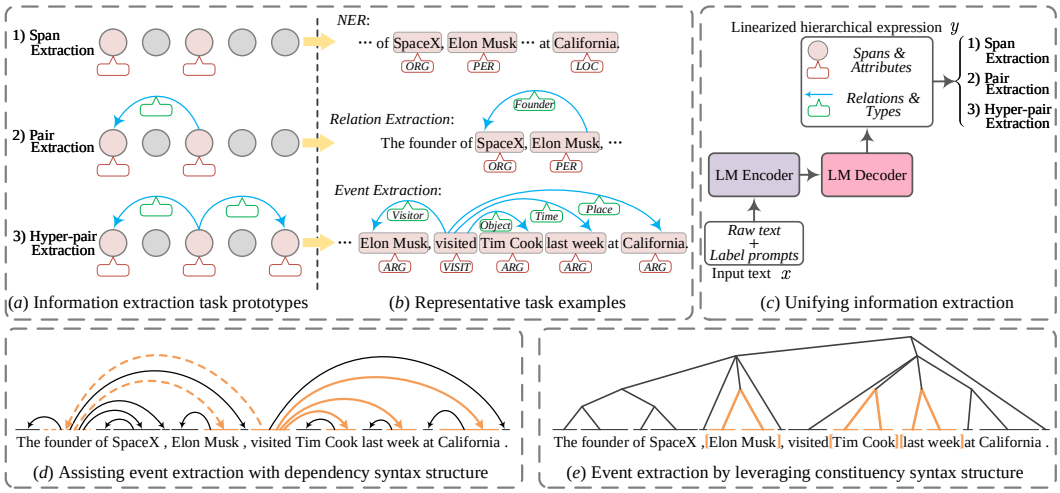

Figure 1: We reduce all the IE tasks into three prototypes (a) with representative examples (b). We unify all IEs with an encoder-decoder GLM (c). Both syntactic *dependency* (d) and *constituency* structure (e) plays a key but distinct role in IE, where the former helps solve *long-range dependence* problem and the latter benefits *boundary detection* issue. Best viewed with zooming in.

On the other hand, previous IE research extensively employs the external syntactic structure information, such as the dependency tree, for task improvements [5, 49, 45, 24, 52, 18]. Behind the enhancements is that IE structure corresponds much with the syntax structure explicitly, where the latter can essentially offer low-level linguistic bias for better learning the high-level semantic structure. As exemplified in Fig. 1(d), the dependency tree coincides much with structure of EE task as in Fig. 1(b). Importantly, some findings reveal that the LMs, being pre-trained on large corpus, capture structural syntax knowledge [68, 20, 23], which gives rise to LMs' distinguishing promotion on IE. Yet probing tasks show that the auto-learned structure representations is weak, which inevitably limits the LM efficacy for IE [8, 30, 65]. Correspondingly, a line of researches fuse external syntax trees into LMs to reinforce the structure awareness, i.e., structure-aware LMs [71, 2, 38, 6].

Motivations. After carefully revisiting the existing literatures, we summarize four key limitations of syntactic structure-aware LMs that hamper IE from further improvements. **First**, existing structure-aware LMs are mostly designed for one certain IE task (e.g., NER [69], RE [36]) instead of UIE, leaving the shared IE knowledge and the task-invariant syntax features unexploited. **Second**, current structure-aware LMs merely consider making use of one standalone type of syntax structures, i.e., mostly using the dependency trees [49, 24]. We however argue that as one core grammar, constituency syntax can serve complementary contributions for IEs. There are two common challenges of IEs: *long-range dependence problem* and *boundary identifying*, in which the dependency structure especially helps solve the former one [49, 45, 52] and the constituency syntax could mostly benefits the latter [79, 46, 54], as in Fig. 1(d)&(e). Thus it is best to simultaneously model both two heterogeneous structures [31, 17]. **Third**, existing works mostly integrate supervised syntax parse trees, where unfortunately, either the amount of manually annotated syntactic data (e.g., PTB) are largely limited, or the annotation noises from third-party parsers are inevitably introduced due to such explicit injection. **Fourth**, parsing syntax comes with task-irrelevant or indirect substructures (e.g., in Fig. 1(d) the black and dotted lines respectively), which would deteriorate the efficacy. Meanwhile, different IE tasks largely demand distinct bias of structural features, while current structure-aware LMs fail to fine-tune the structure knowledge to allow the structure bias best accord with end task's need.

Contributions. On the above basis, we propose learning a latent adaptive structure-aware generative language model for UIE (namely LasUIE). First of all, we reduce UIE into three uniform prototypes, upon which we transform the UIE into generative paradigm with an encoder-decoder GLM, predicting the linearized hierarchical expression (i.e., spans&attributes, relations&types, as shown in Fig. 1(c)). Then, we adopt a three-stage of LM training procedure, where an additional structure-aware post-training is added between the pre-training and fine-tuning stages for structure learning. Inspired by the progress of unsupervised grammar induction [58, 59, 28, 60], we design a heterogeneous structure inductor (HSI) module, where two heterogeneous syntactic structures are simultaneously measured

and automatically learned. With HSI, our GLM initialized with existing pre-trained parameters, during post-training, performs unsupervised syntax induction based on unlabeled texts without relying on external syntax parses or any annotation labor (cf. Fig. 2).

Since the induced latent structural representations may be squeezed aside by the mainstay contextual representations in LM encoder, we further enhance the utility of syntax by introducing a structural broadcaster (SB) module (cf. Fig.2). SB compacts multiple varying latent trees from different encoding attention heads into an explicit constituency-like and a dependency-like forest respectively. During each decoding step, two heterogeneous syntactic forests are utilized to produce high-order features at global level for guiding better content generation. Finally, during the prompt-based fine-tuning stage we perform task-oriented structure adaptive tuning to narrow the gaps between the induced syntactic and task-specific structures (cf. Fig. 3). With policy gradient we dynamically adjust the attributes of two heterogeneous structures according to the feedback of end task performance.

Extensive experiments are performed on 12 representative data across 7 IE tasks. On both the supervised and low-resource settings our framework consistently shows improvements over the baseline systems. Via further analyses we verify that **1)** unifying IE tasks by further modeling structure information in LM benefits IE substantially, especially in the low-resource scenario. **2)** Integrating two heterogeneous structures brings mutual advantages for UIE, helping fully resolve the boundary identifying and long-range dependence issue. **3)** Automatically inducing latent structures in LM with further task-oriented structural adaptation learning significantly consolidates the efficacy of structure knowledge for end tasks. **4)** Different types of IE tasks rely subtly on varying structural bias, all of which can be flexibly learned and correctly satisfied by our system. Our resources can be found at https://github.com/ChocoWu/LasUIE.

2 Related Work

IE is a long-standing research topic in NLP, which includes various tasks as well as growing derivations [4, 63, 47, 44, 35, 78]. We reveal that essentially all the IE tasks can be summarized into three main prototypes, according to the combination numbers of 'mention span' and 'semantic relation' prediction targets: 1) **span extraction**, e.g., named entity recognition (NER) [9], aspect-based sentiment analysis (ABSA) [64], aspect-term extraction (ATE) [37]; 2) **pair extraction**, e.g., relation extraction (RE) [81, 34], aspect-opinion pair extraction (AOP) [85], aspect-based sentiment triplet extraction (ASTE) [50]; and 3) **hyper-pair extraction**, e.g., event extraction (EE) [21], semantic role labeling (SRL) [19], opinion role labeling (ORL) [27, 61]. Mostly prior IE researches all solve one particular task exclusively (or one specific IE type) [49, 72, 40, 77, 86], while they may unfortunately ignore certain task-invariant universal IE features. In this work, we consider the line of UIE, unifying all IE tasks to exploit the shared IE knowledge. And based on the above UIE prototypes, we develop a LM-based unified framework with generative paradigm.

Many efforts are paid for building LMs to handle IE tasks by taking advantages of the knowledge from large-scale pre-training [10, 3, 25, 80, 73]. Another line of IE researches propose injecting external knowledge into LMs or GLMs, such as knowledge graph (KG) [41, 26, 83, 16], syntax structure information [71, 2, 38, 6]. Comparing to the integration of domain-specific KG information for certain IE tasks, syntactic information would provide much broader generic features in the scope of UIE. The very latest research attention of LMs has been focused on the GLMs, the encoder-decoder paradigm LMs. GLMs transform various NLP tasks into a unified seq-to-seq scheme with some properly-designed prompt texts as additional inputs [32, 55, 80]. Very recently, Lu et al. (2022) [42] pioneer the UIE by casting the IE structure prediction into text generation with a GLM, with which our UIE modeling shares the same spirit. We however note that our work can advance in two major aspects. First, we consider the integration of additional structural knowledge in GLMs for UIE enhancements. Besides, [42] require supervisedly pre-training their UIE GLM on a large-scale annotated IE corpus, while our system automatically induces structure knowledge based merely on unlabeled texts without any further annotation and labor.

This work also closely relates to the line of structure-aware LMs. On the one hand, some researches propose directly introducing external syntax trees into LMs to reinforce the structure awareness. They mostly take the Transformer-based LMs as backbone, and fuse the syntax signals (annotations) from external parsers or PTB corpus by modifying the Transformer attentions [71, 38, 6]. Another line of structure-aware LMs directly induce syntax structure into LMs automatically, a.k.a., unsupervised grammar induction [7, 75, 58, 12, 59, 28]. We in this work borrow the success of unsupervised

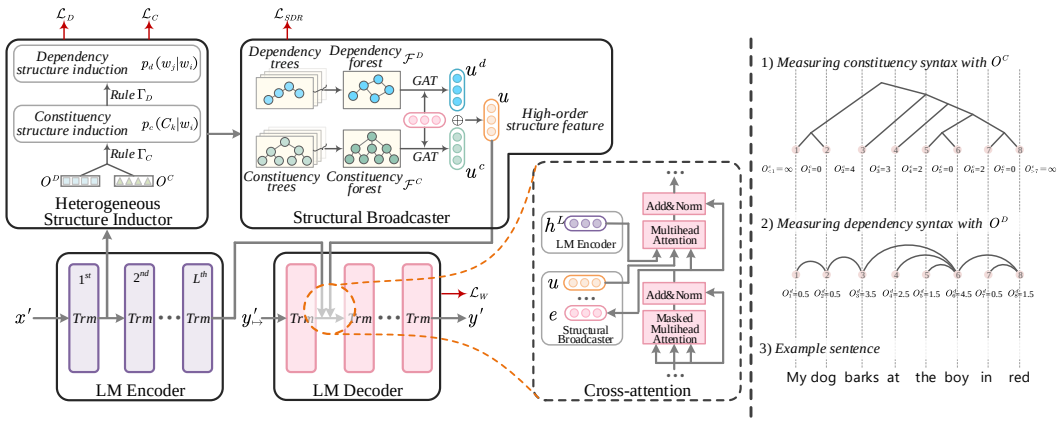

(*a*) Unsupervised structure-aware post-training (*b*) Heterogeneous syntax measurements

Figure 2: Our LasUIE framework under (a) unsupervised structure-aware post-training ($y'_{\mapsto}$ refers to prediction y' with shift right in seq-to-seq procedure). Heterogeneous structure inductor module generates both constituency and dependency structures via (b) two heterogeneous syntax measurements.

grammar induction, inducing rich structure information for LMs for better UIE. Inspired by the foundation of syntax distance measurements [58, 13, 60], we propose to induce linguistic structures and compose both the constituency and dependency syntax structures simultaneously.

3 Unifying Information Extraction with Text Generative Paradigm

As aforementioned, we reduce all IE jobs into the predictions of few structural elements: 1) *spans* and 2) *relations*, and without losing the generality of UIE, we also consider the predictions of 3) *span attributes* and 4) *relation types*. Using different combinations of the structural elements properly can construct a hierarchical IE structure. In other words, we can arrange these elements into a sequential textual expression, from which the actual IE target can be easily restored. Based on this we unifiedly model all IE tasks (i.e., UIE) by transforming the structure prediction into text generation. Fig. 1(c) illustrates the main idea. Such generative scheme also enables to take the advantage of the recent achievement of GLMs, such as BART [32] and T5 [55]. Taking an existing GLM as backbone, we reach the goal of end-to-end UIE as well as complex IE, such as overlapped and discontinuous cases [82, 14, 33]. Our LM encoder takes input text (i.e., x), and the decoder produces the linearized hierarchical expression (LHE), i.e., y. Fig. 3 illustrates the input and output implications.

Input. The input text $x = \{w_1, \cdots, w_n\}$ includes the raw sentence and task-specific label prompts. The label prompts contain the pre-defined task-specific labels, including *span attributes* ('*Attr*') and *relational types* ('*Type*'), where each label is separated by a '<SPAN>' or a '<REL>' marker. Parts of the '*Attr*' and '*Type*' labels will be copied and output in y. We also insert a task identifier token '<TASK>' to inform the model which task to predict.

Output. The output text y is a linearized hierarchical expression that describes how the structural elements organize into the target structure, as depicted in Fig. 3. For example, in span extraction, y should be a list of text spans and attribute labels, i.e., '$\{(Span, Attr), \cdots\}$'. In pair extraction y is a list of pairs, where a pair is represented as '$(Span_i, Attr_i\,[Type_k](Span_j, Attr_j))$' in which $Span_j$ is a subordinate mention of $Span_i$ with a semantic relation $Type_k$. For hyper-pair extraction y is a list of hyper-pairs represented as '$(Span_i, Attr_i\,[Type_k](Span_j, Attr_j)\,[Type_m](Span_k, Attr_k)\cdots)$'.

It is also noteworthy that our LHE takes a similar scheme with [42] , but with difference. For example, in our scheme all the mention comes with an associated attribute label in any IE prototype; while in [42] the subordinate mentions have no attribute labels. Thus, our design could be more generalized.

4 Learning Latent Adaptive Structure-aware Generative Language Model

4.1 Overall Framework

The overall framework is built upon a Transformer-based encoder-decoder GLM, based on which we additionally add 1) a heterogeneous structure inductor module at top of the encoder for structural

learning, 2) a structural broadcaster module between GLM encoder and decoder for enhancing the structural feature utility. Fig. 2 shows the overall architecture of our LasUIE GLM.

LasUIE takes a three-stage training process, where a structure-aware post-training is inserted between the pre-training and fine-tuning stages for structure learning. LasUIE takes an existing well pre-trained GLM parameters (e.g., BART, T5) as initiation. During structure-aware post-training stage our GLM carries out unsupervised syntax induction based on unlabeled plain texts (cf. §4.2). Thereafter, LasUIE is fine-tuned on the in-house training data, along with which we perform task-oriented structure adaptive tuning (cf. §4.3). We also note that LasUIE takes a consistent paradigm of text-to-text generation throughout the whole three stages, which ensures a minimum information loss from the early trainings to the final predicting.

4.2 Unsupervised Structure-aware Post-training

Heterogeneous structure inductor. As cast earlier, although LMs are able to learn certain linguistic knowledge from generic pre-training, the signal strength of learned syntax is quite weak to contribute IE enough [65, 30]. In the structure-aware post-training stage, we aim to unsupervisedly enrich our GLM with sufficient structural knowledge, reinforcing the awareness of linguistic syntax.

Inspired by Shen et al. (2021) [60], we explore a heterogeneous structure inductor (HSI) stacked on top of GLM encoder to reach the above goal. HSI induces linguistic structures based on the foundation of syntax distance measurements [58]. We employ two heterogeneous syntax measurements, i.e., O^C=$\{o^c_1, \cdots, o^c_{n-1}\}$ ($o^c_{<1}$=$o^c_{>n-1}$=∞) for measuring constituency syntax, and O^D=$\{o^d_1, \cdots, o^d_n\}$ for measuring dependency syntax. As illustrated in Fig. 2(b), o^c_i is a real value depicting the height of the lowest common ancestor between two consecutive words w_i and w_{i+1}; while o^d_i is a real value describing the spanning distance between the words linking to w_i. Intuitively, bigger o^c_i means bigger information divergence of the split point between the two sides of phrasal span, and larger o^d_i implies wider range of connections, i.e., longer-term dependent relations. As revealed that the syntax features are best learned at lower layer of GLM encoder [23], HSI thus takes the first-layer encoding representations $\boldsymbol{h}^1_i$ as input and produce syntax context representations via convolution operation: $\boldsymbol{h}^*_i$=Conv($\boldsymbol{h}^1_i$). Based on $\boldsymbol{h}^*_i$, HSI represents o^c_i and o^d_i as:

$$o^c_i = \boldsymbol{V}^c \text{Tanh}(\boldsymbol{W}[\boldsymbol{h}^*_i; \boldsymbol{h}^*_{i+1}]) \,, \quad o^d_i = \boldsymbol{V}^d \text{Tanh}(\boldsymbol{W}\boldsymbol{h}^*_i) \,. \tag{1}$$

Then, two rules are made for generating two heterogeneous syntax based on the two measurements [60], which also helps coordinate two types of structures so that they can co-exist together and legally.

▶ **Rule** Γ_C: *A smallest constituent span $C_{[l,r]}$ of w_i (l<i<r) should satisfy (o^c_{l-1}>o^d_i)&(o^c_r>o^d_i).* For example as in Fig. 2(b), o^c_2(=4)>o^d_3(=3.5) and o^c_8(=∞)>o^d_3, thus $C_{[3,8]}$ is the valid minimum span for w_3.

▶ **Rule** Γ_D: *Generalizing w_i as a potential span $C_{[l=i,r=i]}$, the dependent head of any word in $C_{[l,r]}$ is $w_j \leftarrow argmax_{k\in[l,r]}(o^d_k)$.* For example, the maximum o^d in constituent span of $C_{[3,8]}$ is o^d_6=4.5, thus dependent head of the word in $C_{[3,8]}$ is w_6.

Based on rule Γ_C we first generate all possible phrasal spans and organize them into a constituency tree $\mathcal{T}^C$, then constructing the dependency tree $\mathcal{T}^D$ according to rule Γ_D. We parameterize the above structure construction process so as to make it all differentiable, i.e., by describing into the probabilistic perspective. We represent the span $C_{[l,r]}$ distribution as:

$$\begin{aligned} p_c(c_k|w_i) &= p(w_l|w_i) \cdot p(w_r|w_i) \\ &= [\sigma(o^d_i - \underset{k\in[l,i)}{\text{Max}}(o^c_k)) - \sigma(o^d_i - \underset{k\in(l,i)}{\text{Max}}(o^c_k))] \cdot [\sigma(o^d_i - \underset{k\in[i,r)}{\text{Max}}(o^c_k)) - \sigma(o^d_i - \underset{k\in[i,r]}{\text{Max}}(o^c_k))], \end{aligned} \tag{2}$$

where c_k is a short hand for $C_{[l,r]}$, σ is a sigmoid function. We then depict the rule Γ_D, and represent the word-word dependent distribution:

$$p_d(w_j|w_i) = p_d(w_j|c_k) \cdot p_c(c_k|w_i) = p_c(c_k|w_i) \cdot \exp(\boldsymbol{h}^L_j) / \sum_{k=l}^{r} \exp(\boldsymbol{h}^L_k) \,, \tag{3}$$

where we use the top-layer encoder representation $\boldsymbol{h}^L_i$, by which we encourage the final encoding representations to learn from the low-layer syntax-rich representations. We note that the above structure induction is carried out in each of multi-head attention blocks (total M) in Transformer. This means that multiple distinct syntax trees of each type (i.e., $\mathcal{T}^C$ and $\mathcal{T}^D$) will be induced.

Structural broadcaster. It is a high chance that in GLM encoder the mainstay contextual representations will weaken the structural features and thus hurt the structure utility at decoder. To combat this, we propose a SB module, by which we explicitly collect varying trees of a type and compacted them into a forest, respectively, i.e., constituency forest $\mathcal{F}^C$ and dependency forest $\mathcal{F}^D$. According to prior studies [48, 43, 62], comparing to the optimal 1-best syntax tree, a compact forest advances in higher structure recall, which allows to learn a better bias for task. In SB, the structural priors from the syntax forests are explicitly broadcast into each decoding step for guiding the generation process.

Technically, SB selects and ranks candidate tree substructures based on the probabilistic confidence (Eq.2&3), which are then compacted into a forest based on the K-best maximum spanning tree (MST) algorithm [1, 88]. We then model the two types of forests with a graph attention model (GAT) [67] respectively, during which the decoding representation $\boldsymbol{e}$ at each step is attended to spot the high-order structural feature $\boldsymbol{u}$ at global level:

$$\boldsymbol{u}^{c/d} = \text{GAT}(\mathcal{F}^{C/D}, \boldsymbol{e} \quad | \quad \boldsymbol{h}^1)\,, \tag{4}$$

$$\boldsymbol{u} = \boldsymbol{u}^d \oplus \boldsymbol{u}^c\,. \tag{5}$$

Further via a cross-attention operation (cf. Fig. 3) we navigate the encoder representation $\boldsymbol{h}^L$ and the structural feature $\boldsymbol{u}$ into the updated encoder representation $\boldsymbol{e}^*$:

$$\boldsymbol{e}^* = \text{Softmax}(\frac{\boldsymbol{h}^L \cdot \boldsymbol{u}}{\sqrt{d}}) \cdot \boldsymbol{e}\,. \tag{6}$$

Post-training objectives. The first objective is performing seq-to-seq style language modeling, i.e., 'corrupting + reconstructing' the inputs [32], which is identical to the pre-training objectives. We denote the language modeling loss as $\mathcal{L}_W$.

Along with the language modeling we then promote the unsupervised structure induction, including the one for dependency syntax and the one for constituency syntax:

$$\mathcal{L}_D = -\sum_m^M \sum_i^n \sum_j^n \log p_d(w_j|w_i)\,, \tag{7}$$

$$\mathcal{L}_C = -\sum_m^M \sum_i^n \sum_k^K [\log p_c(c_k|w_i) + \log(\exp \phi(c_k)/\mathcal{Z})]\,, \tag{8}$$

where $\phi(c_k)$=$\frac{(\boldsymbol{h}^c)^T \cdot \boldsymbol{h}^L_{[l,r]}}{||\boldsymbol{h}^c|| \cdot ||\boldsymbol{h}^L_{[l,r]}||}$ is a span similarity score between the constituent phrase c_k and the counterpart text span derived from the top-layer encoder. $\mathcal{Z}$ is for normalization.

We also perform structure diversifying regularization (SDR), putting constraints on the varying trees induced from different multi-head encoder attentions so as to ensure structure diversification.

$$\mathcal{L}_{SDR} = -\sum_m^M \sum_k^M ||A_m \odot A_k||\,, \quad k \neq m\,, \tag{9}$$

where A_m or A_k is an attention map. We put all the above objectives together as the post-training target: $\mathcal{L}_{PRT} = \mathcal{L}_W + \mathcal{L}_D + \mathcal{L}_C + \mathcal{L}_{SDR}$.

4.3 Task-oriented Structure Fine-tuning

After structure-aware post-training, our GLM is finally fine-tuned on a specific terminal IE task to learn the on-demand features. This target is an empirical risk minimization with cross-entropy loss:

$$\mathcal{L}_{Task} = -\sum^D \log p(y|x)\,, \tag{10}$$

where D is the mini-batch size.

Meanwhile, we perform further task-oriented structural fine-tuning, adapting the learned structure information to the task-specific IE structures, for example, in dependency structure pruning those trivial word-word connections and adjusting the range

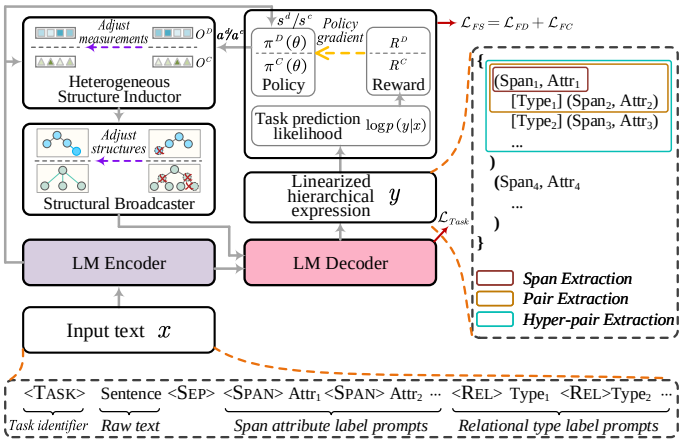

Figure 3: Fine-tuning our GLM with structure adaptive learning.

of dependent paths; in constituency structure refining the phrase widths and granularities. Our main idea is to amend the syntax attribute (i.e., dependency links and constituent compositions) by directly taking the feedback of end task performance. Therefore, we employ the stochastic policy gradient algorithm [76]. As shown in Fig. 3, the actions $a_i^{c/d} \in (-1, 1)$ are real values sampled with probabilities from a Gaussian distribution, by which we maintain a continuous control over syntax measurements, i.e., O^D and O^C.

$$\bar{a}_i^{c/d} \sim \pi^{C/D}(\boldsymbol{s}_i^{c/d}; \theta^{c/d}) = \mathcal{N}(0, I)\,, \tag{11}$$

$$a_i^{c/d} = 2\sigma(\bar{a}_i^{c/d}) - 1\,, \tag{12}$$

$$o_i^{c/d} := a^{c/d} + o_i^{c/d}\,, \tag{13}$$

where the $\boldsymbol{s}_i^{c/d}$=($\boldsymbol{h}_i^1 \oplus \boldsymbol{h}_i^* \oplus \boldsymbol{h}_i^L$) are the state representations as the inputs of the policy agents. The policy agents $\pi^C(\theta^c)$ and $\pi^D(\theta^d)$ are two parameterized two-layer feedforward networks, respectively. We design the reward of the policy as the probability of correct task prediction, such that the structure adjustments are directly supervised by terminal task's signals: $R^{C/D} = \log p(y|x)$. The learning target of each policy is to maximize the corresponding expected reward:

$$\mathcal{L}_{FD} = -\sum_{(a_1^d s_1^d \cdots a_n^d s_n^d)} \prod_i p(a_i^d | \boldsymbol{s}_i^d; \theta^d) \cdot R_i^D\,, \tag{14}$$

$$\mathcal{L}_{FC} = -\sum_{(a_1^c s_1^c \cdots a_n^c s_n^c)} \prod_i p(a_i^c | \boldsymbol{s}_i^c; \theta^c) \cdot R_i^C\,. \tag{15}$$

We summarize all the fine-tuning targets: $\mathcal{L}_{FT}$=$\mathcal{L}_{Task} + \mathcal{L}_{FS}$, where $\mathcal{L}_{FS}$=$\mathcal{L}_{FD} + \mathcal{L}_{FC}$.

5 Experiments

5.1 Setups

We take the pre-trained T5 Base as default backbone GLM. We use the plain texts from *Wikipedia*[2] and *BooksCorpus*[3] corpora for the post-training. To cover all three UIE prototypes, we consider 7 representative IE tasks with corresponding data: 1) NER: CoNLL03 [66], OntoNote [53], ACE04 [11], ACE05 [22]; 2) RE: CoNLL04 [57], NYT [56], ACE05 [22]; 3) AOP: Res14 [51]; 4) ASTE: Res14 [51]; 5) ORL: MPQA [74]; 6) SRL: CoNLL12 [53]; 7) EE: ACE05 [22]. Each dataset has its own split, and we follow the same practice of the relevant prior works when using it.

We verify the IE performances under the traditional separate scheme and the recent unified scheme, respectively. ***1) In separate IE***, we compare with the current SoTA systems (all using Large version LM/GLM) of each specific data; meanwhile we implement a T5 (Base version) system, namely GEN-T5, using the same generative manner (based on prompt input, generating LHE as ours) for running each task individually. We also retrofit the GEN-T5 system by injecting into the external syntax parse trees via additional training on the syntax annotated corpus, including the dependency syntax (+*DepSyn*), constituency syntax (+*ConSyn*) and both two types syntax (+*Dep&ConSyn*), respectively. ***2) In unified IE***, we mainly make comparisons with the current UIE system [42]. Note that the default UIE model (marked as UIE*†) in raw paper uses T5 Large and meanwhile takes additional supervised pre-training on the large-scale IE corpus (the version without supervised IE pre-training marked as UIE*). To ensure fair comparisons, we re-implement their system with T5-Base parameters and without supervised IE pre-training, marked as UIE. Same as to GEN-T5, we also retrofit the UIE model by integrating heterogeneous syntax parse trees in different combinations.

Following each of previous works, we use the F1 evaluation metrics. For each task, we consider the end-to-end prediction. For example, for the span extraction (NER), we measure if both the mention span and the mention attribute are correct. For the pair(/hyper-pair) extraction, we measure if the span boundary & span attribute & relation & type are all correct simultaneously.

5.2 Main Results

We present the overall comparison results on various IE tasks in Table 1 and Table 2 under the fully-supervised and low-resource scenario, respectively. As can be seen, our proposed LasUIE

[2] https://autonlp.ai/datasets/wikipedia-news-corpus

[3] https://huggingface.co/datasets/bookcorpus

Table 1: Overall IE performances by different methods (all using LM/GLM). Models with $*$ (M1, M6, M7 & M8) refers to the use of Large version LM, where scores by M1, M6 & M7 are copied from their raw paper [42]. UIE*† (M6) takes additional supervised pre-training on the large-scale IE corpus. **Bold**: the best results among the comparisons using Large and Base LMs, respectively.

Task&Data		***Span Extraction***				***Pair Extraction***					***Hyper-pair Extraction***			*Avg.*
		NER				**RE**			**AOP**	**ASTE**	**ORL**	**SRL**	**EE**	
		CoNLL03	OntoNote	ACE04	ACE05	CoNLL04	NYT	ACE05	Res14	Res14	MPQA	CoNLL12	ACE05	
• ***Separate IE***														
M1	SoTA*	93.2	91.9	86.8	84.7	73.6	92.7	65.6	69.3	73.6	53.0	73.5	48.3	75.5
M2	GEN-T5	91.0	89.1	84.3	83.0	69.4	90.3	60.2	62.5	71.8	49.8	69.3	43.7	72.0
M3	+*DepSyn*	91.5	89.5	84.9	83.4	70.3	91.8	62.4	64.3	72.6	51.5	70.8	45.5	73.2
M4	+*ConSyn*	92.1	90.0	85.3	83.8	69.8	90.8	61.5	63.1	72.3	50.7	70.1	44.3	72.8
M5	+*Dep&ConSyn*	92.3	90.4	85.3	84.1	71.2	92.1	63.3	66.0	73.0	52.1	71.7	46.5	74.0
• ***Unified IE***														
M6	UIE*†	93.0	/	**86.9**	85.8	75.0	/	66.0	/	74.5	/	/	/	/
M7	UIE*	92.1	/	86.5	85.5	73.1	93.5	64.7	/	/	/	/	/	/
M8	**LasUIE*** (Ours)	**93.5**	**93.0**	86.8	**86.3**	**75.3**	**94.2**	**66.8**	**73.6**	**75.9**	**57.8**	**76.3**	**51.7**	**77.5**
M9	UIE	91.4	89.7	85.0	83.5	70.5	91.0	61.6	65.8	72.8	50.8	70.2	44.6	73.1
M10	+*DepSyn*	91.8	90.0	85.3	83.7	71.2	92.0	62.9	67.6	73.5	52.0	71.5	46.4	74.0
M11	+*ConSyn*	92.0	90.5	85.6	84.0	70.8	91.3	62.1	66.1	73.1	51.3	71.0	45.2	73.6
M12	+*Dep&ConSyn*	92.3	91.1	86.0	85.2	71.7	92.4	63.7	68.9	73.7	53.6	72.6	47.0	74.8
M13	**LasUIE** (Ours)	**93.2**	**92.5**	**86.6**	**85.5**	**73.6**	**93.8**	**64.8**	**70.8**	**75.0**	**56.2**	**74.9**	**49.6**	**76.4**
M14	w/o SB	92.0	90.7	85.8	84.6	71.7	92.0	62.9	68.3	73.6	54.7	73.4	47.7	74.8
M15	w/o $\mathcal{L}_{SDR}$	93.0	92.3	86.5	85.3	73.0	93.2	64.3	70.2	74.5	55.7	74.2	49.0	75.9
M16	w/o $\mathcal{L}_{FS}$	92.6	92.1	86.3	85.0	71.8	92.5	63.4	69.1	73.8	54.2	73.0	47.1	75.0

framework consistently outperforms the baseline UIE and other SoTA models on all tasks in both two learning scenarios, under both the Large or Base T5 initiations. This demonstrates the efficacy of our proposal. Also we compare the counterparts between M2-M5 and M9-M12, where the only difference between these generative methods lies in the seprate or unified modeling of IE. From the results we learn that the unified modeling of IE (i.e., UIE) is more effective than the traditional separate modeling of specific IE task. This verifies that the universal modeling helps share the task-invariant IE features, coinciding with the findings in [42].

5.3 In-depth Analysis

To aid better understanding the strengths of our method, we further present in-depth analyses from varying angles, i.e., by asking four key questions concentrating on the structure-aware GLM for UIE.

Q1: Can fusing syntax structure knowledge into GLM contribute to UIE? Let's compare the results in Table 1: M2 vs. M3&M4&M5 in separate IE setup, and M9 vs. M10&M11&M12 in unified IE setup, where *either in separate or unified IE setup, integrating additional linguistic syntax features into GLM evidently improves all end task performances.* Interestingly, different tasks can receive varying degree of improvements from the syntax features. Importantly, we see in Table 2 that with the aids of structure knowledge, the performances of low-resource transfer can be promoted, especially in the combination with the unified modeling of IE tasks. This proves that *the syntactic structures in GLM can serve as IE task-invariant features, further contributing to UIE.*

Q2: What are the differences to integrate the constituency and dependency syntactic structure? We now observe the results of different tasks in both Table 1&2, and we can find that *on the span extraction type IE (i.e., NER) the improvements from constituency syntax prevail, while the dependency type of structure features dominate the pair-wise tasks, i.e., (hyper-)pair extraction.* We further analyze the error rate on the predictions of two kernel elements of IE, i.e., boundary recognition and relation detection, respectively on various tasks. We see from Fig. 4 that *the constituency structure more tends to offer key clues for the boundary recognition; while the dependent trees are more apt to cope with the relation detection, solving long-range dependence issue.* This shows that two heterogeneous structures have complementary advantages to UIE. *Thus, when combining both of them together, all the end tasks receive the enhancements to the greatest extent.*

Table 2: Performances on low-resource settings by IE models (using T5 Base). The scores by UIE†, which takes additional pre-training with large-scale supervised IE corpus, are copied from raw paper [42]. GEN-5 model takes separate IE modeling on each task, while the other models take unified IE.

Task&Data	***Span Extraction***				***Pair Extraction***					***Hyper-pair Extraction***			*Avg.*
	NER				**RE**			**AOP**	**ASTE**	**ORL**	**SRL**	**EE**	
	CoNLL03	OntoNote	ACE04	ACE05	CoNLL04	NYT	ACE05	Res14	Res14	MPQA	CoNLL12	ACE05	
• ***1-shot***													
UIE†	**46.4**	/	/	/	22.1	/	/	/	/	/	/	/	/
GEN-T5+*Dep&ConSyn*	27.2	20.4	14.8	17.6	8.2	25.7	10.8	12.8	10.8	1.1	6.5	1.5	13.1
UIE+*Dep&ConSyn*	30.3	23.6	17.5	20.7	12.8	26.7	14.3	16.7	13.0	2.8	14.0	3.8	16.4
LasUIE	39.4	**47.6**	**38.5**	**44.7**	**25.7**	**45.0**	**26.7**	**30.0**	**38.4**	**18.9**	**32.8**	**23.7**	**34.3**
• ***10-shot***													
UIE†	73.9	/	/	/	52.4	/	/	/	/	/	/	/	/
GEN-T5+*Dep&ConSyn*	67.4	64.7	49.2	52.8	45.6	50.8	37.4	19.7	17.8	5.4	18.7	12.2	36.8
UIE+*Dep&ConSyn*	69.5	68.4	52.8	54.1	51.8	56.0	43.8	22.5	26.1	10.5	23.2	17.6	41.4
LasUIE	**74.0**	**78.3**	**60.3**	**65.3**	**55.0**	**67.7**	**46.1**	**42.4**	**48.8**	**25.4**	**45.8**	**27.1**	**53.0**
• ***1% data***													
UIE†	**82.8**	/	/	/	30.8	/	/	/	/	/	/	/	/
GEN-T5+*Dep&ConSyn*	79.5	72.4	58.3	61.7	17.8	35.8	15.4	15.3	15.3	3.3	10.7	3.4	32.4
UIE+*Dep&ConSyn*	80.6	73.2	60.4	63.8	23.5	40.4	22.7	20.6	18.5	5.3	17.6	10.2	36.4
LasUIE	82.1	**84.5**	**65.7**	**70.1**	**32.0**	**53.6**	**34.2**	**34.8**	**41.7**	**21.0**	**39.8**	**25.7**	**48.8**
• ***10% data***													
UIE†	89.6	/	/	/	59.2	/	/	/	/	/	/	/	/
GEN-T5+*Dep&ConSyn*	89.0	84.0	71.3	68.8	52.4	80.4	45.7	56.0	59.7	22.4	50.7	26.7	58.9
UIE+*Dep&ConSyn*	89.3	85.8	72.1	70.6	54.9	82.5	47.6	58.3	62.6	27.4	54.3	31.7	64.4
LasUIE	**91.6**	**89.3**	**83.6**	**81.7**	**60.8**	**86.0**	**50.5**	**63.0**	**66.7**	**36.0**	**58.4**	**38.4**	**67.2**

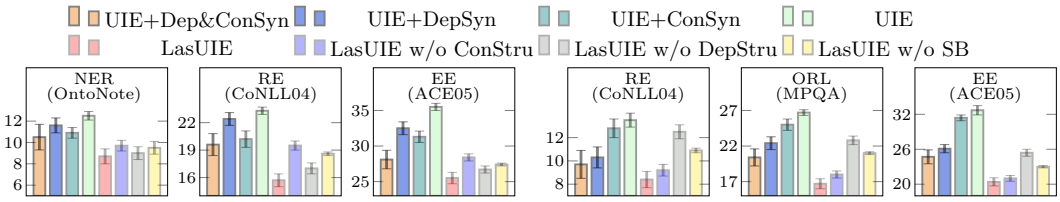

(a) Error rate (%) on boundary recognition (b) Error rate (%) on relation detection

Figure 4: Error rates on boundary recognition and relation detection, respectively.

Q3: For UIE, is it more advanced for GLM to automatically learn latent structures than injecting external syntax parse trees? First, the comparisons in the main results directly prove the advance of using latent structural features for UIE. For example, under the fair comparison, our LasUIE beats the UIE+*Dep&ConSyn* model with average 1.6%(=76.4-74.8) F1 improvement. Even comparing with the UIE*† that takes additional pre-training on large-scale supervised IE corpus, LasUIE keeps its superiority in almost all cases. This evidently verifies that *it is necessary for LMs to automatically learn latent structure information for better UIE.* The underlying reason of our model's improvements could be that *the dynamically learned richer structural knowledge in LasUIE largely avoids the noises that are introduced in external syntax parse annotations.* Besides, as shown in Fig. 4, LasUIE reduces the errors on predicting the mention boundaries and relational pairings more significantly than the baseline counterparts.

Further we step into our LasUIE system itself, and inspect the ablation models, M14-M15, as shown in Table 1. We see that the proposed structural broadcaster module plays important role to the overall system, i.e., without SB, LasUIE is downgraded to the level of UIE+*Dep&ConSyn*. Also the structure diversification regularization mechanism serves positive effect.

Q4: Is it necessary to further fine-tune the structures in GLM for UIE? According to the results of the ablation model, M16, in Table 1, we can directly claim the answer is positive. Without performing structural fine-tuning, the results by LasUIE hurt clearly, with averaged 1.4%(=76.4-75.0) F1 drop. We next dig into the structural fine-tuning mechanism, analyzing how the auto-induced structural features influence the UIE performances.

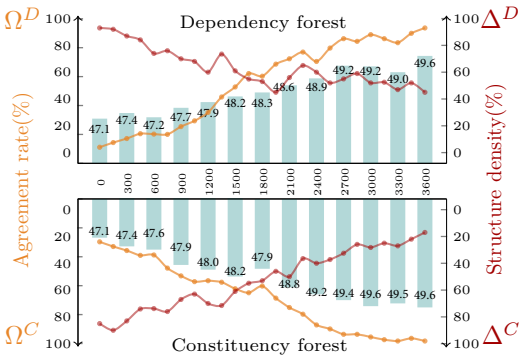

Figure 5: Trajectories of the changing structure agreement rates and densities during task-oriented structure fine-tuning, based on event extraction (ACE05). X-axis is the iteration steps for fine-tuning. Bars means the task performances (F1).

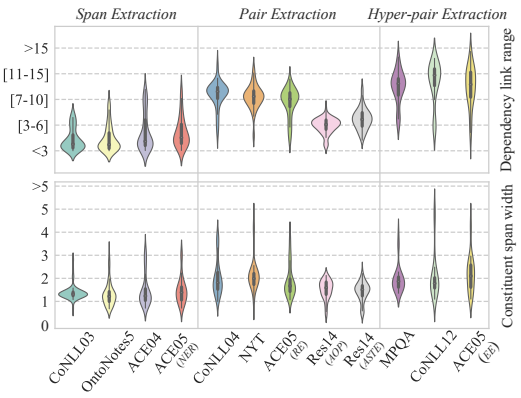

Figure 6: The distributions of the range of word-word dependency link (words) in forest $\mathcal{F}^D$ and the constituency phrasal span width (words) in forest $\mathcal{F}^C$ on each data.

We first study the changing trajectories of the 1) the structure agreement rates $\Omega^{D/C}$ and 2) the structure densities $\Delta^{D/C}$ of the structural forests $\mathcal{F}^{D/C}$, during fine-tuning. Ω^C or Ω^D is defined as the percentage that gold spans correspond to the phrasal spans in the constituency forest $\mathcal{F}^C$, or the gold relational pairs coincide with the word-word edges in the dependency forest $\mathcal{F}^D$. As plotted in Fig. 5, along with the fine-tuning process the task performance climbs gradually. Meanwhile, both the agreement rate $\Omega^{D/C}$ increases, which means that *the structural fine-tuning indeed can effectively adjust the learned structural information towards task-specific*. Also, the structural densities of two forests change from dense to sparse, which depicts a structure pruning process in our system.

Finally, in Fig. 6 we present the distribution of the range of word-word dependency links in $\mathcal{F}^D$ and distribution of the constituency phrasal span width in $\mathcal{F}^C$. We can discover that different end tasks rely on subtly varying structural features or attributes. For example, hyper-pair extraction tasks require longer-range dependency features for relation determination, comparing to the IE tasks of other prototypes. In turn, this certifies that *our system can correctly learn the peculiar structural bias for a specific IE task*, thanks to the task-oriented structure fine-tuning mechanism.

6 Conclusion and Discussion

This work investigates a novel structure-aware generative language model (GLM) that learns rich heterogeneous syntactic structure representations for better unified information extraction (UIE). First, a well pre-trained GLM is taken as backbone to reach the goal of UIE, feeding with label prompt-based texts and predicting linearized hierarchical expressions that describe the actual IE target. During post-training, the proposed heterogeneous structure inductor automatically generates rich structure information without relying on any additional syntax annotation. A structural broadcaster then compacts various trees into forests for enhancing the structural feature utility and guiding better context generation. The learned structural knowledge is further fine-tuned on the in-house training data so as to adapt into the task-specific need. Extensive experiments and in-depth analyses demonstrate the efficacy of our system on improving the UIE.

Potential impact and limitations of the work. The proposed structure-aware GLM learns syntactic knowledge relies only on the plain texts with easy access, without any cost of large-scale human-labor annotations. The system will benefit the development of IE community, i.e., training one single unified model for effectively solving various IE tasks, which especially addresses the issue of IE data annotation scarcity in the real-life applications. One biggest potential risk is that the GPU-based training of our language model will cost energy consumption and CO_2 emissions.

Acknowledgments and Disclosure of Funding

This research is supported by the Sea-NExT Joint Lab. We would also like to thank the anonymous reviewers for their valuable feedbacks.

References

[1] Zeljko Agic. K-best spanning tree dependency parsing with verb valency lexicon reranking. In *Proceedings of the International Conference on Computational Linguistics*, pages 1–12, 2012.

[2] Mahtab Ahmed, Muhammad Rifayat Samee, and Robert E. Mercer. You only need attention to traverse trees. In *Proceedings of the Annual Meeting of the Association for Computational Linguistics*, pages 316–322, 2019.

[3] Christoph Alt, Marc Hübner, and Leonhard Hennig. Fine-tuning pre-trained transformer language models to distantly supervised relation extraction. In *Proceedings of the 57th Annual Meeting of the Association for Computational Linguistics*, pages 1388–1398, 2019.

[4] Peggy M. Andersen, Philip J. Hayes, Steven P. Weinstein, Alison K. Huettner, Linda M. Schmandt, and Irene B. Nirenburg. Automatic extraction of facts from press releases to generate news stories. In *Third Conference on Applied Natural Language Processing*, pages 170–177, 1992.

[5] Gabor Angeli, Melvin Jose Johnson Premkumar, and Christopher D. Manning. Leveraging linguistic structure for open domain information extraction. In *Proceedings of the 53rd Annual Meeting of the Association for Computational Linguistics and the 7th International Joint Conference on Natural Language Processing*, pages 344–354, 2015.

[6] Jiangang Bai, Yujing Wang, Yiren Chen, Yaming Yang, Jing Bai, Jing Yu, and Yunhai Tong. Syntax-BERT: Improving pre-trained transformers with syntax trees. In *Proceedings of the 16th Conference of the European Chapter of the Association for Computational Linguistics: Main Volume*, pages 3011–3020, 2021.

[7] Jihun Choi, Kang Min Yoo, and Sang-goo Lee. Learning to compose task-specific tree structures. In *Proceedings of the Thirty-Second AAAI Conference on Artificial Intelligence*, pages 5094–5101, 2018.

[8] Alexis Conneau, German Kruszewski, Guillaume Lample, Loïc Barrault, and Marco Baroni. What you can cram into a single $&!#* vector: Probing sentence embeddings for linguistic properties. In *Proceedings of the Annual Meeting of the Association for Computational Linguistics*, pages 2126–2136, 2018.

[9] Silviu Cucerzan and David Yarowsky. Language independent named entity recognition combining morphological and contextual evidence. In *Proceedings of the Joint SIGDAT Conference on Empirical Methods in Natural Language Processing and Very Large Corpora*, 1999.

[10] Jacob Devlin, Ming-Wei Chang, Kenton Lee, and Kristina Toutanova. BERT: Pre-training of deep bidirectional transformers for language understanding. In *Proceedings of the 2019 Conference of the North American Chapter of the Association for Computational Linguistics: Human Language Technologies*, pages 4171–4186, 2019.

[11] George R. Doddington, Alexis Mitchell, Mark A. Przybocki, Lance A. Ramshaw, Stephanie M. Strassel, and Ralph M. Weischedel. The automatic content extraction (ACE) program - tasks, data, and evaluation. In *Proceedings of The Language Resources and Evaluation Conference*, page 837–840, 2004.

[12] Andrew Drozdov, Patrick Verga, Mohit Yadav, Mohit Iyyer, and Andrew McCallum. Unsupervised latent tree induction with deep inside-outside recursive auto-encoders. In *Proceedings of the 2019 Conference of the North American Chapter of the Association for Computational Linguistics: Human Language Technologies*, pages 1129–1141, 2019.

[13] Hao Fei, Yafeng Ren, and Donghong Ji. Retrofitting structure-aware transformer language model for end tasks. In *Proceedings of the 2020 Conference on Empirical Methods in Natural Language Processing*, pages 2151–2161, 2020.

[14] Hao Fei, Yafeng Ren, and Donghong Ji. Boundaries and edges rethinking: An end-to-end neural model for overlapping entity relation extraction. *Information Processing & Management*, 57(6):102311, 2020.

[15] Hao Fei, Donghong Ji, Bobo Li, Yijiang Liu, Yafeng Ren, and Fei Li. Rethinking boundaries: End-to-end recognition of discontinuous mentions with pointer networks. In *Proceedings of the AAAI Conference on Artificial Intelligence*, pages 12785–12793, 2021.

[16] Hao Fei, Yafeng Ren, Yue Zhang, Donghong Ji, and Xiaohui Liang. Enriching contextualized language model from knowledge graph for biomedical information extraction. *Briefings in Bioinformatics*, 22(3), 2021.

[17] Hao Fei, Shengqiong Wu, Yafeng Ren, Fei Li, and Donghong Ji. Better combine them together! integrating syntactic constituency and dependency representations for semantic role labeling. In *Findings of the Association for Computational Linguistics: ACL-IJCNLP 2021*, pages 549–559, 2021.

[18] Hao Fei, Shengqiong Wu, Yafeng Ren, and Meishan Zhang. Matching structure for dual learning. In *Proceedings of the International Conference on Machine Learning, ICML*, pages 6373–6391, 2022.

[19] Daniel Gildea and Daniel Jurafsky. Automatic labeling of semantic roles. In *Proceedings of the Annual Meeting of the Association for Computational Linguistics*, pages 512–520, 2000.

[20] Yoav Goldberg. Assessing bert's syntactic abilities. *CoRR*, abs/1901.05287, 2019.

[21] Harry Halpin and Johanna D. Moore. Event extraction in a plot advice agent. In *Proceedings of the 21st International Conference on Computational Linguistics and 44th Annual Meeting of the Association for Computational Linguistics*, pages 857–864, 2006.

[22] hristopher Walker, Stephanie Strassel, Julie Medero, and Kazuaki Maeda. Ace 2005 multilingual training corpus. In *Proceedings of Philadelphia: Linguistic Data Consortium*, 2006.

[23] Ganesh Jawahar, Benoît Sagot, and Djamé Seddah. What does BERT learn about the structure of language? In *Proceedings of the Annual Meeting of the Association for Computational Linguistics*, pages 3651–3657, 2019.

[24] Zhanming Jie and Wei Lu. Dependency-guided LSTM-CRF for named entity recognition. In *Proceedings of the 2019 Conference on Empirical Methods in Natural Language Processing and the 9th International Joint Conference on Natural Language Processing*, pages 3862–3872, 2019.

[25] Mandar Joshi, Danqi Chen, Yinhan Liu, Daniel S. Weld, Luke Zettlemoyer, and Omer Levy. Spanbert: Improving pre-training by representing and predicting spans. *Transactions of the Association for Computational Linguistics*, 8:64–77, 2020.

[26] Kornraphop Kawintiranon and Lisa Singh. Knowledge enhanced masked language model for stance detection. In *Proceedings of the 2021 Conference of the North American Chapter of the Association for Computational Linguistics: Human Language Technologies*, pages 4725–4735, 2021.

[27] Soo-Min Kim and Eduard Hovy. Extracting opinions, opinion holders, and topics expressed in online news media text. In *Proceedings of the Workshop on Sentiment and Subjectivity in Text*, pages 1–8, 2006.

[28] Yoon Kim, Chris Dyer, and Alexander Rush. Compound probabilistic context-free grammars for grammar induction. In *Proceedings of the Annual Meeting of the Association for Computational Linguistics*, pages 2369–2385, 2019.

[29] Keshav Kolluru, Samarth Aggarwal, Vipul Rathore, Mausam, and Soumen Chakrabarti. IMoJIE: Iterative memory-based joint open information extraction. In *Proceedings of the 58th Annual Meeting of the Association for Computational Linguistics*, pages 5871–5886, 2020.

[30] Olga Kovaleva, Alexey Romanov, Anna Rogers, and Anna Rumshisky. Revealing the dark secrets of BERT. In *Proceedings of the 2019 Conference on Empirical Methods in Natural Language Processing and the 9th International Joint Conference on Natural Language Processing*, pages 4365–4374, 2019.

[31] Michael Lepori, Tal Linzen, and R. Thomas McCoy. Representations of syntax [MASK] useful: Effects of constituency and dependency structure in recursive LSTMs. In *Proceedings of the 58th Annual Meeting of the Association for Computational Linguistics*, pages 3306–3316, 2020.

[32] Mike Lewis, Yinhan Liu, Naman Goyal, Marjan Ghazvininejad, Abdelrahman Mohamed, Omer Levy, Veselin Stoyanov, and Luke Zettlemoyer. BART: Denoising sequence-to-sequence pre-training for natural language generation, translation, and comprehension. In *Proceedings of the Annual Meeting of the Association for Computational Linguistics*, pages 7871–7880, 2020.

[33] Fei Li, ZhiChao Lin, Meishan Zhang, and Donghong Ji. A span-based model for joint overlapped and discontinuous named entity recognition. In *Proceedings of the 59th Annual Meeting of the Association for Computational Linguistics and the 11th International Joint Conference on Natural Language Processing*, pages 4814–4828, 2021.

[34] Jingye Li, Kang Xu, Fei Li, Hao Fei, Yafeng Ren, and Donghong Ji. MRN: A locally and globally mention-based reasoning network for document-level relation extraction. In *Findings of the Association for Computational Linguistics: ACL-IJCNLP 2021*, pages 1359–1370, 2021.

[35] Jingye Li, Hao Fei, Jiang Liu, Shengqiong Wu, Meishan Zhang, Chong Teng, Donghong Ji, and Fei Li. Unified named entity recognition as word-word relation classification. In *Proceedings of the AAAI Conference on Artificial Intelligence*, pages 10965–10973, 2022.

[36] Xiaoya Li, Jingrong Feng, Yuxian Meng, Qinghong Han, Fei Wu, and Jiwei Li. A unified MRC framework for named entity recognition. In *Proceedings of the 58th Annual Meeting of the Association for Computational Linguistics*, pages 5849–5859, 2020.

[37] Xin Li and Wai Lam. Deep multi-task learning for aspect term extraction with memory interaction. In *Proceedings of the Conference on Empirical Methods in Natural Language Processing*, pages 2886–2892, 2017.

[38] Zhongli Li, Qingyu Zhou, Chao Li, Ke Xu, and Yunbo Cao. Improving BERT with syntax-aware local attention. In *Findings of the Association for Computational Linguistics: ACL-IJCNLP 2021*, pages 645–653, 2021.

[39] Hongyu Lin, Yaojie Lu, Xianpei Han, and Le Sun. Adaptive scaling for sparse detection in information extraction. In *Proceedings of the 56th Annual Meeting of the Association for Computational Linguistics*, pages 1033–1043, July 2018.

[40] Ying Lin, Heng Ji, Fei Huang, and Lingfei Wu. A joint neural model for information extraction with global features. In *Proceedings of the 58th Annual Meeting of the Association for Computational Linguistics*, pages 7999–8009, 2020.

[41] Angli Liu, Jingfei Du, and Veselin Stoyanov. Knowledge-augmented language model and its application to unsupervised named-entity recognition. In *Proceedings of the 2019 Conference of the North American Chapter of the Association for Computational Linguistics: Human Language Technologies*, pages 1142–1150, 2019.

[42] Yaojie Lu, Qing Liu, Dai Dai, Xinyan Xiao, Hongyu Lin, Xianpei Han, Le Sun, and Hua Wu. Unified structure generation for universal information extraction. In *Proceedings of the 60th Annual Meeting of the Association for Computational Linguistics*, pages 5755–5772, 2022.

[43] Chunpeng Ma, Akihiro Tamura, Masao Utiyama, Tiejun Zhao, and Eiichiro Sumita. Forest-based neural machine translation. In *Proceedings of the 56th Annual Meeting of the Association for Computational Linguistics*, pages 1253–1263, 2018.

[44] Xuezhe Ma and Eduard Hovy. End-to-end sequence labeling via bi-directional LSTM-CNNs-CRF. In *Proceedings of the 54th Annual Meeting of the Association for Computational Linguistics*, pages 1064–1074, 2016.

[45] Diego Marcheggiani and Ivan Titov. Encoding sentences with graph convolutional networks for semantic role labeling. In *Proceedings of the Conference on Empirical Methods in Natural Language Processing*, pages 1506–1515, 2017.

[46] Diego Marcheggiani and Ivan Titov. Graph convolutions over constituent trees for syntax-aware semantic role labeling. In *Proceedings of the 2020 Conference on Empirical Methods in Natural Language Processing*, pages 3915–3928, 2020.

[47] Mstislav Maslennikov and Tat-Seng Chua. A multi-resolution framework for information extraction from free text. In *Proceedings of the 45th Annual Meeting of the Association of Computational Linguistics*, pages 592–599, 2007.

[48] Haitao Mi and Liang Huang. Forest-based translation rule extraction. In *Proceedings of the 2008 Conference on Empirical Methods in Natural Language Processing*, pages 206–214, 2008.

[49] Makoto Miwa and Mohit Bansal. End-to-end relation extraction using LSTMs on sequences and tree structures. In *Proceedings of the 54th Annual Meeting of the Association for Computational Linguistics*, pages 1105–1116, 2016.

[50] Haiyun Peng, Lu Xu, Lidong Bing, Fei Huang, Wei Lu, and Luo Si. Knowing what, how and why: A near complete solution for aspect-based sentiment analysis. In *Proceedings of the AAAI Conference on Artificial Intelligence*, pages 8600–8607, 2020.

[51] Maria Pontiki, Dimitris Galanis, John Pavlopoulos, Harris Papageorgiou, Ion Androutsopoulos, and Suresh Manandhar. SemEval-2014 task 4: Aspect based sentiment analysis. In *Proceedings of the 8th International Workshop on Semantic Evaluation (SemEval 2014)*, pages 27–35, 2014.

[52] Amir Pouran Ben Veyseh, Tuan Ngo Nguyen, and Thien Huu Nguyen. Graph transformer networks with syntactic and semantic structures for event argument extraction. In *Findings of the Association for Computational Linguistics: EMNLP 2020*, pages 3651–3661, 2020.

[53] Sameer Pradhan, Alessandro Moschitti, Nianwen Xue, Hwee Tou Ng, Anders Björkelund, Olga Uryupina, Yuchen Zhang, and Zhi Zhong. Towards robust linguistic analysis using OntoNotes. In *Proceedings of the Seventeenth Conference on Computational Natural Language Learning*, pages 143–152, 2013.

[54] Xiaojun Quan, Zhengcheng Min, Kun Li, and Yunyi Yang. Compound aspect extraction by augmentation and constituency lattice. *IEEE Transactions on Affective Computing*, 2022.

[55] Colin Raffel, Noam Shazeer, Adam Roberts, Katherine Lee, Sharan Narang, Michael Matena, Yanqi Zhou, Wei Li, and Peter J. Liu. Exploring the limits of transfer learning with a unified text-to-text transformer. *Journal of Machine Learning Research*, 21:140:1–140:67, 2020.

[56] Sebastian Riedel, Limin Yao, and Andrew McCallum. Modeling relations and their mentions without labeled text. In *Proceedings of Machine Learning and Knowledge Discovery in Databases, European Conference, ECML PKDD*, pages 148–163, 2010.

[57] Dan Roth and Wen-tau Yih. A linear programming formulation for global inference in natural language tasks. In *Proceedings of the Eighth Conference on Computational Natural Language Learning (CoNLL-2004) at HLT-NAACL*, pages 1–8, 2004.

[58] Yikang Shen, Zhouhan Lin, Chin-Wei Huang, and Aaron C. Courville. Neural language modeling by jointly learning syntax and lexicon. In *Proceedings of the International Conference on Learning Representations*, 2018.

[59] Yikang Shen, Shawn Tan, Alessandro Sordoni, and Aaron C. Courville. Ordered neurons: Integrating tree structures into recurrent neural networks. In *Proceedings of the International Conference on Learning Representations*, 2019.

[60] Yikang Shen, Yi Tay, Che Zheng, Dara Bahri, Donald Metzler, and Aaron Courville. StructFormer: Joint unsupervised induction of dependency and constituency structure from masked language modeling. In *Proceedings of the 59th Annual Meeting of the Association for Computational Linguistics and the 11th International Joint Conference on Natural Language Processing*, pages 7196–7209, 2021.

[61] Wenxuan Shi, Fei Li, Jingye Li, Hao Fei, and Donghong Ji. Effective token graph modeling using a novel labeling strategy for structured sentiment analysis. In *Proceedings of the 60th Annual Meeting of the Association for Computational Linguistics*, pages 4232–4241, 2022.

[62] Linfeng Song, Yue Zhang, Daniel Gildea, Mo Yu, Zhiguo Wang, and Jinsong Su. Leveraging dependency forest for neural medical relation extraction. In *Proceedings of the 2019 Conference on Empirical Methods in Natural Language Processing and the 9th International Joint Conference on Natural Language Processing*, pages 208–218, 2019.

[63] Mihai Surdeanu, Sanda Harabagiu, John Williams, and Paul Aarseth. Using predicate-argument structures for information extraction. In *Proceedings of the 41st Annual Meeting of the Association for Computational Linguistics*, pages 8–15, 2003.

[64] Duyu Tang, Bing Qin, Xiaocheng Feng, and Ting Liu. Effective LSTMs for target-dependent sentiment classification. In *Proceedings of the International Conference on Computational Linguistics*, pages 3298–3307, 2016.

[65] Ian Tenney, Patrick Xia, Berlin Chen, Alex Wang, Adam Poliak, R. Thomas McCoy, Najoung Kim, Benjamin Van Durme, Samuel R. Bowman, Dipanjan Das, and Ellie Pavlick. What do you learn from context? probing for sentence structure in contextualized word representations. In *Proceedings of the International Conference on Learning Representations*, 2019.

[66] Erik F. Tjong Kim Sang and Fien De Meulder. Introduction to the CoNLL-2003 shared task: Language-independent named entity recognition. In *Proceedings of the Seventh Conference on Natural Language Learning at HLT-NAACL*, pages 142–147, 2003.

[67] Petar Velickovic, Guillem Cucurull, Arantxa Casanova, Adriana Romero, Pietro Liò, and Yoshua Bengio. Graph attention networks. In *Proceedings of the International Conference on Learning Representations*, 2018.

[68] Jesse Vig and Yonatan Belinkov. Analyzing the structure of attention in a transformer language model. In *Proceedings of the 2019 ACL Workshop BlackboxNLP: Analyzing and Interpreting Neural Networks for NLP*, pages 63–76, 2019.

[69] Jue Wang and Wei Lu. Two are better than one: Joint entity and relation extraction with table-sequence encoders. In *Proceedings of the 2020 Conference on Empirical Methods in Natural Language Processing*, pages 1706–1721, 2020.

[70] Xinyu Wang, Yong Jiang, Nguyen Bach, Tao Wang, Zhongqiang Huang, Fei Huang, and Kewei Tu. Improving named entity recognition by external context retrieving and cooperative learning. In *Proceedings of the 59th Annual Meeting of the Association for Computational Linguistics and the 11th International Joint Conference on Natural Language Processing*, pages 1800–1812, 2021.

[71] Yaushian Wang, Hung-Yi Lee, and Yun-Nung Chen. Tree transformer: Integrating tree structures into self-attention. In *Proceedings of the Conference on Empirical Methods in Natural Language Processing*, pages 1061–1070, 2019.

[72] Yucheng Wang, Bowen Yu, Yueyang Zhang, Tingwen Liu, Hongsong Zhu, and Limin Sun. Tplinker: Single-stage joint extraction of entities and relations through token pair linking. In *Proceedings of the International Conference on Computational Linguistics*, pages 1572–1582, 2020.

[73] Ziqi Wang, Xiaozhi Wang, Xu Han, Yankai Lin, Lei Hou, Zhiyuan Liu, Peng Li, Juanzi Li, and Jie Zhou. CLEVE: Contrastive Pre-training for Event Extraction. In *Proceedings of the 59th Annual Meeting of the Association for Computational Linguistics and the 11th International Joint Conference on Natural Language Processing*, pages 6283–6297, 2021.

[74] Janyce Wiebe, Theresa Wilson, and Claire Cardie. Annotating expressions of opinions and emotions in language. *Language Resources and Evaluation*, 39(2-3):165–210, 2005.

[75] Adina Williams, Andrew Drozdov, and Samuel R. Bowman. Do latent tree learning models identify meaningful structure in sentences? *Transactions of the Association for Computational Linguistics*, 6: 253–267, 2018.

[76] Ronald J. Williams. Simple statistical gradient-following algorithms for connectionist reinforcement learning. *Machine Learning*, 8:229–256, 1992.

[77] Shengqiong Wu, Hao Fei, Yafeng Ren, Donghong Ji, and Jingye Li. Learn from syntax: Improving pair-wise aspect and opinion terms extraction with rich syntactic knowledge. In *Proceedings of the Thirtieth International Joint Conference on Artificial Intelligence*, pages 3957–3963, 2021.

[78] Shengqiong Wu, Hao Fei, Fei Li, Donghong Ji, Meishan Zhang, Yijiang Liu, and Chong Teng. Mastering the explicit opinion-role interaction: Syntax-aided neural transition system for unified opinion role labeling. In *Proceedings of the AAAI Conference on Artificial Intelligence*, pages 3943–3951, 2022.

[79] Ying Xu, Christoph Ringlstetter, Mi-Young Kim, Grzegorz Kondrak, Randy Goebel, and Yusuke Miyao. A lexicalized tree kernel for open information extraction. In *Proceedings of the 53rd Annual Meeting of the Association for Computational Linguistics and the 7th International Joint Conference on Natural Language Processing*, pages 279–284, 2015.

[80] Hang Yan, Tao Gui, Junqi Dai, Qipeng Guo, Zheng Zhang, and Xipeng Qiu. A unified generative framework for various NER subtasks. In *Proceedings of the 59th Annual Meeting of the Association for Computational Linguistics and the 11th International Joint Conference on Natural Language Processing*, pages 5808–5822, 2021.

[81] Dmitry Zelenko, Chinatsu Aone, and Anthony Richardella. Kernel methods for relation extraction. In *Proceedings of the Conference on Empirical Methods in Natural Language Processing*, pages 71–78, 2002.

[82] Xiangrong Zeng, Daojian Zeng, Shizhu He, Kang Liu, and Jun Zhao. Extracting relational facts by an end-to-end neural model with copy mechanism. In *Proceedings of the 56th Annual Meeting of the Association for Computational Linguistics*, pages 506–514, 2018.

[83] Taolin Zhang, Zerui Cai, Chengyu Wang, Minghui Qiu, Bite Yang, and Xiaofeng He. SMedBERT: A knowledge-enhanced pre-trained language model with structured semantics for medical text mining. In *Proceedings of the 59th Annual Meeting of the Association for Computational Linguistics and the 11th International Joint Conference on Natural Language Processing*, pages 5882–5893, 2021.

[84] Wenxuan Zhang, Xin Li, Yang Deng, Lidong Bing, and Wai Lam. Towards generative aspect-based sentiment analysis. In *Proceedings of the 59th Annual Meeting of the Association for Computational Linguistics and the 11th International Joint Conference on Natural Language Processing*, pages 504–510, 2021.

[85] He Zhao, Longtao Huang, Rong Zhang, Quan Lu, and Hui Xue. Spanmlt: A span-based multi-task learning framework for pair-wise aspect and opinion terms extraction. In *Proceedings of the Annual Meeting of the Association for Computational Linguistics*, pages 3239–3248, 2020.

[86] Hengyi Zheng, Rui Wen, Xi Chen, Yifan Yang, Yunyan Zhang, Ziheng Zhang, Ningyu Zhang, Bin Qin, Xu Ming, and Yefeng Zheng. PRGC: Potential relation and global correspondence based joint relational triple extraction. In *Proceedings of the 59th Annual Meeting of the Association for Computational Linguistics and the 11th International Joint Conference on Natural Language Processing*, pages 6225–6235, 2021.

[87] Zexuan Zhong and Danqi Chen. A frustratingly easy approach for entity and relation extraction. In *Proceedings of the 2021 Conference of the North American Chapter of the Association for Computational Linguistics: Human Language Technologies*, pages 50–61, 2021.

[88] Ran Zmigrod, Tim Vieira, and Ryan Cotterell. On finding the k-best non-projective dependency trees. In *Proceedings of the 59th Annual Meeting of the Association for Computational Linguistics and the 11th International Joint Conference on Natural Language Processing*, pages 1324–1337, 2021.

Checklist

1. For all authors...
   (a) Do the main claims made in the abstract and introduction accurately reflect the paper's contributions and scope? [Yes]
   (b) Did you describe the limitations of your work? [Yes]
   (c) Did you discuss any potential negative societal impacts of your work? [N/A]
   (d) Have you read the ethics review guidelines and ensured that your paper conforms to them? [Yes]
2. If you are including theoretical results...
   (a) Did you state the full set of assumptions of all theoretical results? [Yes]
   (b) Did you include complete proofs of all theoretical results? [N/A]
3. If you ran experiments...
   (a) Did you include the code, data, and instructions needed to reproduce the main experimental results (either in the supplemental material or as a URL)? [Yes]
   (b) Did you specify all the training details (e.g., data splits, hyperparameters, how they were chosen)? [Yes]
   (c) Did you report error bars (e.g., with respect to the random seed after running experiments multiple times)? [Yes]
   (d) Did you include the total amount of compute and the type of resources used (e.g., type of GPUs, internal cluster, or cloud provider)? [Yes]
4. If you are using existing assets (e.g., code, data, models) or curating/releasing new assets...
   (a) If your work uses existing assets, did you cite the creators? [N/A]
   (b) Did you mention the license of the assets? [N/A]
   (c) Did you include any new assets either in the supplemental material or as a URL? [N/A]
   (d) Did you discuss whether and how consent was obtained from people whose data you're using/curating? [Yes]
   (e) Did you discuss whether the data you are using/curating contains personally identifiable information or offensive content? [N/A]
5. If you used crowdsourcing or conducted research with human subjects...
   (a) Did you include the full text of instructions given to participants and screenshots, if applicable? [N/A]
   (b) Did you describe any potential participant risks, with links to Institutional Review Board (IRB) approvals, if applicable? [N/A]
   (c) Did you include the estimated hourly wage paid to participants and the total amount spent on participant compensation? [N/A]