On-the-fly learning of adaptive strategies with bandit algorithms

Abstract

Automation of machine learning model development is increasingly becoming an established research area. While automated model selection and automated data pre-processing have been studied in depth, there is, however, a gap concerning automated model adaptation strategies for streaming data with non-stationarities. This has previously been addressed by heuristic generic adaptation strategies in the batch streaming setting. While showing promising performance, these strategies contain some limitations. In this work, we propose using multi-armed bandit algorithms for learning adaptive strategies from incrementally streaming data on-the-fly. Empirical results using established bandit algorithms show a comparable performance to two common stream learning algorithms.

1. Introduction

Machine learning on non-stationary streaming data is a common situation part of which is adapting the model to changes in the underlying data generating process (DGP). While automated model selection and automated data pre-processing have been studied in depth, there is, however, a gap concerning automated model adaptation strategies for streaming data with non-stationarities. In many situations one cannot expect a static model trained on historical data to maintain performance as time proceeds. Here *adaptation* is defined as changes in model *training set*, *parameters* and *structure* all designed to track changes in the underlying DGP over time.

To cope with non-stationary data, many proposed algorithms for machine learning on streaming data involve one or more mechanisms for adapting the model, which will be further referred to as *adaptive mechanisms (AM)*. Deploying various AMs greatly increases the performance of models, however, in most of the cases, the AMs deployment choice (which we will refer to as *adaptation strategy*) is tied to the custom algorithm design choice. With the multitude of available AMs, the design of the adaptation strategy can be a tedious and time consuming task.

Despite advances in automated machine learning, we note that there is a gap concerning automated development of models' adaptation strategy. This has been previously addressed using meta level heuristic adaptation strategies (Bakirov et al., 2021). While showing promising results, these strategies had some shortcomings; they a) required a batch setting, b) increased the runtime and c) did not provide any theoretical performance guarantees. Here, we address these issues by learning the adaptation strategies on-the-fly, this is, *during the data stream process* using the theoretically sound multi-armed bandit algorithms on incremental data. Multi-armed bandit algorithms are designed to maximise a cumulative reward during a sequential process where decisions are made at each step from a limited set of possibilities. This is ideal for solving our problem as adaptation strategies seek to minimise the mean loss over many steps using a small set of AMs. In addition, the theoretical properties of the bandit algorithms provide some optimality guarantees for adaptive strategies.

In this paper, we first formulate the AM selection in the bandit scenario. We then test several prominent bandit algorithms for the Dynamic Weighted Majority (DWM) (Kolter and Maloof, 2007) and Paired Learner (PL) (Bach and Maloof, 2010) strategies for AM selection. We compare the results to the original DWM algorithm using 26 synthetic and 7 real-world classification data sets. We conclude empirically that the bandit based adaptive strategies leads to comparable performance with the custom strategies. Our contributions are a) a novel formulation of AM selection as a bandit learning problem, and b) an empirical analysis of relevant bandit learning algorithms on AM selection.

©2021 A. Uthor and S. Cientist.

2. Background

An early work in the context of AutoML for streaming data can be found in (Kadlec and Gabrys, 2009), where a general purpose architecture to develop robust, adaptive prediction systems for the autonomous operation in changing environments for streaming data has been proposed. Recently AutoML for streaming non-stationary data has became a focus of the community's attention. Taking advantage of the recent wave of research, an alternative approach to adaptation to changing environments was proposed in (Martín Salvador et al., 2016) where repeated automated deployment of Auto-WEKA for Multi-Component Predictive Systems (MCPS) to learn from new batches of data was used for life-long learning and the adaptation of complex MCPS when applied to changing streaming data from process industries. Celik and Vanschoren (2020) represent a development of this idea with the inclusion of drift detection and the experimentation using several open source AutoML frameworks. An interesting approach closely tied with the Auto_Sklearn is described in (Madrid et al., 2019) where authors propose using the ensemble nature of this framework to deal with streaming data, by adapting the weights of experts and adding new ones. Bakirov et al. (2021) describe the framework of model adaptation with multiple adaptive mechanisms (AMs) and proposes heuristics algorithms for automated adaptive strategies based on flexible deployment of these AMs.

3. Formulation

To formalise the adaptation with multiple AMS, we use the framework from (Bakirov et al., 2021), adopted for incremental learning. We consider the predictive method at time t as a function $\hat{y}_t = f_t(\boldsymbol{x}_t, \Theta_f)$. where $\hat{y}_t$ is the prediction, f_t is the prediction function, and Θ_f is the associated parameter set. Our estimate, f_t, evolves via adaptation with each t-th data instance.

We denote the *a priori* predictive function at batch t as f_t^-, and the *a posteriori* predictive function, i.e. the adapted function given the observed output, as f_t^+. An *adaptive mechanism*, $g(\cdot)$, may thus formally be defined as an operator which generates an updated prediction function based on the instance $\{\boldsymbol{x}_t, y_t\}$ and other optional inputs. This can be written as $g_t(\boldsymbol{x}_t, y_t, \Theta_g, f_t^-, \hat{\boldsymbol{y}}_t) : f_t^- \rightarrow f_t^+$ or alternatively as $f_t^+ = f_t^- \circ g_t$ for conciseness. Note f_t^- and $\hat{\boldsymbol{y}}_t$ are optional arguments and Θ_g is the set of parameters of g. The function is propagated onto the next data instance as $f_{t+1}^- = f_t^+$ and predictions themselves are always made using the *a priori* function f_t^-.

We examine a situation when a choice of multiple, different AMs, $\{\emptyset, g_1, ..., g_H\} = G$, is available. Any AM $g_{h_t} \subset G$ can be deployed after each data instance arrival, where h_t denotes the AM deployed for t-th data instance. As the history of all adaptations up to the data instance, t, have in essence created f_t^-, we call that sequence $g_{h_1}, ..., g_{h_t}$ an *adaptation sequence*. Note that we also include the option of applying no adaptation denoted by $\emptyset$, thus any adaptive algorithm fits multiple AMs framework, as long as there is an option of *not adapting*. In this formulation, only one element of G is applied for each data instance. Deploying multiple adaptation mechanisms on the same batch are accounted for with their own symbol in G.

Using data instance $\{\boldsymbol{x}_t, y_t\}$ for adaptation, it is possible to obtain H predictive models, $f_t^- \circ g_1, \cdots, f_t^- \circ g_H$. After the true label is revealed, the reward of the selected model in $f_t^- \circ g_{h_t}$, r_{h_t} can be calculated[1]. Thus, the task of coming up with the adaptation strategy amounts to the selection of a predictive model from F_t (equivalent to the selection of g_{h_t} from G) for all $t \geq 2$.

It is easy to note that if we assume a fixed unknown reward distribution for each AM, the problem of learning of adaptive strategy is a classical multi-armed bandit problem (Lattimore and Szepesvári, 2020) where the arms are the set G of AMs. Multi-armed bandit algorithms bound *regret*, that is the difference between the chosen and the single best action's reward, sub-linearly depending on the number of rounds T under some conditions. For adaptive strategy learning, a sub-linear regret

1. In this work we use $r = 0$ if $y = \hat{y}$ and $r = 1$ otherwise.

bound means that the cumulative reward $R_t = \sum_{t=1}^{T} r_t$ using the bandit algorithm for the choice of AMs will converge to this of the optimal single AM selection.

There is a caveat which makes the bounds of classical bandit algorithms not applicable[2] to the AM selection problem. These algorithms assume that the distribution of AMs' rewards are time invariant. This assumption would not hold in stream data scenario as reward distributions will depend on the context such as non-stationarities in data and the choice of previously deployed AMs. This can be handled by the *contextual* bandit algorithms (Tewari and Murphy, 2017), which take additional information such as these into account.

4. Experiments

Our experiments are based on the DWM and PL algorithms. DWM is a dynamic ensemble and PL a combination of stable and reactive learners, both very common settings for the stream learning. Both of these settings include multiple AMs, not all of which are used in DWM and PL. For our experiments we will use both settings; a) using *all AMs* and b) as using only the AMs which were part of the the original algorithms (*custom AMs*). These options simulate prior information available at the design of adaptive strategy; if known, the poor performing AMs would typically not be included in the set G. Otherwise, it would make sense to use all available AMs for adaptive strategy learning. Used datasets are given in supplementary materials. Below we present the details of stream learning methods and the used bandit algorithms.

4.1 Dynamic Weighted Majority style adaptation

DWM is a dynamic weighted classifiers ensemble which enables all three adaptation possibilities common to these methods; the individual retraining or incremental learning of the experts with new data, adjustment of the weights and addition/removal of experts. These can be combined in all possible ways resulting in 8 AMs. We will consider 6 of them as all possible AMs[3].

AM1 (No adaptation). No changes are applied to the predictive model, corresponding to $\emptyset$.

AM2 (Incremental Learning). Each predictor is updated with a new data instance.

AM3 (Weights Update and Experts Pruning). Weights of predictors which misclassify the current data instance are decreased and experts with weights lower than fixed threshold are removed.

AM4. AM2 (Weights Update and Experts Pruning) followed by AM1 (Incremental Learning).

AM5. AM2 (Weights Update and Experts Pruning) followed by the creation of a new expert.

AM6. AM2 (Weights Update and Experts Pruning) followed by AM1 (Incremental Learning) followed by the creation of a new expert.

DWM original adaptive Strategy. At time t, after an arrival of new instance $\{\boldsymbol{x}_t, y_t\}$, predictors make predictions and the final label is calculated as shown earlier in this section. Then, all predictors learn on this instance and update their weights (AM4) and the final prediction is calculated. If an instance is misclassified, a new predictor with the weight of one is created (AM6).

4.2 Paired Learner style adaptation

PL maintains two learners - a *stable* learner which is updated with all of incoming data and which is used to make predictions, and a *reactive* learner, which is trained only on a window of the most recent data. For this method, three adaptive mechanisms are possible, which are described below.

AM1 (No adaptation). No changes are applied to the predictive model, corresponding to $\emptyset$.

AM2 (Updating stable learner). Stable learner is updated with a new data instance.

AM3 (Switching to reactive learner). Stable learner is discarded and replaced by reactive learner.

2. In practice the algorithms are still applicable and may provide good results.
3. Excluding the scenarios where experts are added without weights update leading to unlimited expert numbers.

PL (custom adaptive strategy). Original PL adaptive strategy revolves around comparing the accuracy values of stable (u_s^t) and reactive (u_r^t) learners on each batch of data. Every time when $u_s^t < u_r^t$ a change counter is incremented. If the counter is higher than a defined threshold θ, an existing stable learner is discarded and replaced by the reactive learner, while the counter is set to 0. As before, a new reactive learner is continued to be trained with the most recent data.

4.3 Bandit algorithms

For learning of adaptive strategies we have experimented with four bandit algorithms, including two variants of LinUCB listed below. For each of these algorithms we consider a cold-start scenario, where we start with uniform estimated rewards per AM and a warm-start (denoted below with (w)), where we run the algorithm on a dataset beforehand twice and use the resulting estimated rewards to report the outcome of the third run. The warm start scenario simulates processing extended data streams as well as reduces the randomness effects in algorithms, all of which use random selection for the cases when two or more AMs have the same estimated reward.

The most basic out of three, ϵ-greedy algorithm (Lattimore and Szepesvári, 2020) estimates the rewards of the actions at time t as mean accumulated reward for this action: $E(r_g) = \frac{R_{g,t}}{t}$. Then, the action with the highest reward is chosen with a probability of $1 - \epsilon$, (so called exploitation) and a random action is chosen with a probability of ϵ (exploration).

The second bandit algorithm is Kullback-Leibler Upper Confidence Bounds (KL-UCB) (Garivier and Cappé, 2011), a superior variation of the standard Upper Confidence Bounds (UCB) algorithm (Lattimore and Szepesvári, 2020). UCB chooses the action with a highest upper confidence bound of reward at each time step. While time-invariant rewards assumption that KL-UCB has does not hold in our case, meaning that its reward bounds are not applicable, it still provides good results.

To satisfy the condition of rewards' dependency on non-stationarity and previous actions (the context), we include a contextual bandit algorithm LinUCB (linear UCB) (Li et al., 2010). It assumes a linear relationship between the context and the reward, which is estimated via ridge regression. For a standard version of LinUCB, at time t we include two context variables, the result of the last classification (1 if $\hat{y_{t-1}} = y_{t-1}$, 0 otherwise) and the last deployed action h_{t-1}. For experiments with sets of all possible AMs both for DWM and PL adaptations styles, we have also used hybrid LinUCB, which also includes the context on the actions. LinUCB has the regret bound of $\tilde{\mathcal{O}}(\sqrt{KdT})$ where K is the number of arms and d is number of context features.

5. Results

5.1 Dynamic Weighted Majority

Synthetic data. The results of the experiments using DWM AMs are shown via Nemenyi plots on Figure 1a,b. With all available AMs, DWM is a leader, however KL-UCB(w) and LinUCB Hybrid(w) achieve statistically comparable performance. LinUCB algorithms show a relatively poor performance. For DWM custom AMs DWM again has the best mean performance rank. This time LinUCB algorithms provide comparable outcome.

Real data. Results on real data on all AMs (Table 1a) show DWM having the top accuracy for most of the datasets. However, only in three cases, the performance of *PL* is more than 1% higher than the runner-up algorithm. Among bandit based methods KL-UCB(w) appears to be a strong contender, while ϵ-greedy is lagging behind. The situation is different when considering custom AMs only (Table 2a), as algorithms don't have to test the "weak" AMs (e.g. "do nothing") and suffer a possible reward penalty. Here LinUCB algorithms, especially LinUCB(w) are leaders, with KL-UCB also showing good performance.

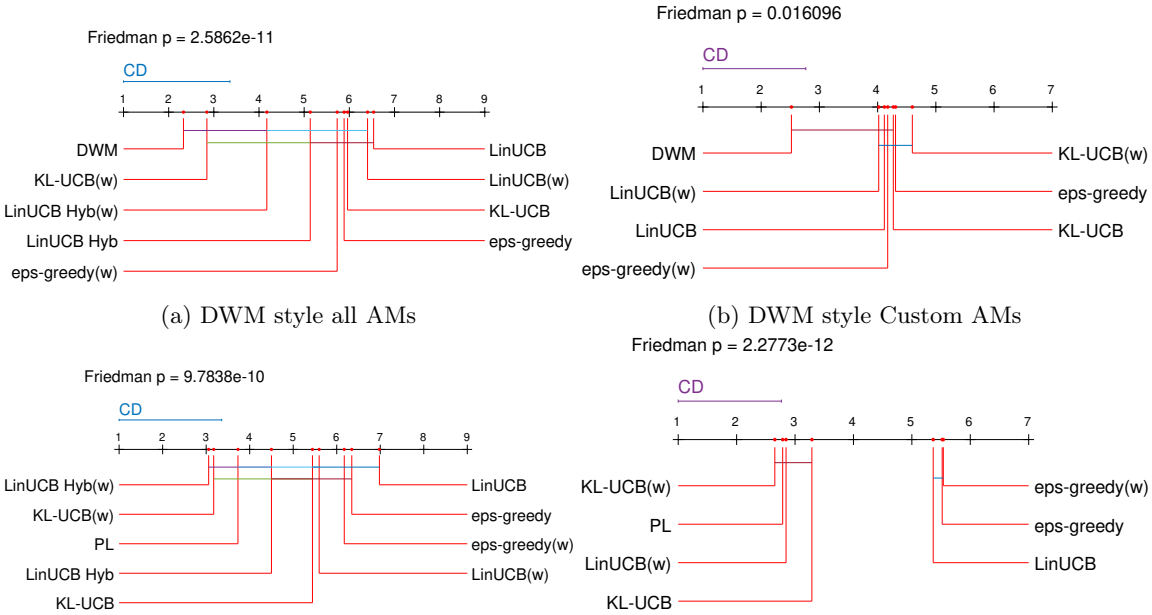

(a) DWM style all AMs

(b) DWM style Custom AMs

(c) PL style all AMs

(d) PL style custom AMs

Figure 1: Nemenyi plots (lower is better) of adaptation using bandit-based and custom adaptive strategies on synthetic datasets.

Table 1: Accuracy values of adaptation for bandit-based with all AMs and custom adaptive strategies on real datasets. Top accuracy values are bold, runner-ups are bold-italic.

a) DWM style	LIN UCB	LIN UCB(W)	LINUCB HYB	LINUCB HYB(W)	KL-UCB	KL-UCB(W)	ϵ-GRD	ϵ-GRD (W)	DWM
Electricity	0.855	0.843	0.853	0.853	0.845	***0.872***	0.847	0.847	**0.874**
Power	0.592	0.539	***0.675***	0.544	0.522	0.669	0.651	0.655	**0.677**
Contraceptive	0.418	***0.453***	0.412	0.381	0.379	**0.465**	0.379	0.388	0.399
Iris	0.748	0.864	0.808	0.846	0.866	0.873	***0.884***	0.849	**0.891**
Yeast	0.403	0.468	0.278	***0.468***	0.468	**0.469**	0.312	0.314	0.297
Gas	0.893	0.916	0.852	0.889	0.893	***0.925***	0.919	0.919	**0.943**
Gestures	0.917	0.915	0.911	0.923	0.913	***0.926***	0.883	0.881	**0.937**
b) PL style	LIN UCB	LIN UCB(W)	LINUCB HYB	LINUCB HYB(W)	KL-UCB	KL-UCB(W)	ϵ-GRD	ϵ-GRD (W)	PL
Electricity	0.860	***0.862***	0.861	0.859	0.859	0.858	0.839	0.840	**0.866**
Power	0.508	0.491	0.625	0.539	0.588	**0.678**	0.653	0.644	***0.645***
Contraceptive	**0.445**	***0.445***	0.445	0.434	0.434	0.433	0.410	0.415	0.413
Iris	0.730	0.858	0.856	0.860	***0.872***	0.733	0.870	0.828	**0.879**
Yeast	0.284	0.385	0.289	***0.470***	**0.470**	0.337	0.288	0.287	0.320
Gas	0.816	0.901	***0.910***	0.891	0.897	0.898	0.887	0.889	**0.929**
Gestures	0.848	0.849	0.841	***0.851***	0.847	0.845	0.775	0.773	**0.894**

Table 2: Accuracy values of adaptation for bandit-based with custom AMs and custom adaptive strategies on real datasets. Top accuracy values are bold, runner-ups are bold-italic.

a) DWM style	Lin UCB	Lin UCB(w)	KL-UCB	KL-UCB(w)	ϵ-grd	ϵ-grd(w)	DWM
Electricity	0.874	0.874	**0.875**	***0.875***	0.873	0.874	0.874
Power	0.673	**0.679**	***0.677***	0.675	0.676	0.675	0.677
Contraceptive	***0.403***	**0.407**	0.398	0.395	0.396	0.395	0.399
Iris	0.889	0.882	0.878	**0.893**	***0.891***	0.884	***0.891***
Yeast	***0.378***	**0.393**	0.330	0.312	0.325	0.364	0.297
Gas	***0.939***	0.938	0.937	0.936	0.939	0.939	**0.943**
Gestures	***0.930***	***0.930***	0.928	0.929	0.929	0.929	**0.937**
b) PL style	Lin UCB	Lin UCB(w)	KL-UCB	KL-UCB(w)	ϵ-grd	ϵ-grd(w)	PL
Electricity	0.860	0.861	***0.861***	0.860	0.860	0.859	**0.866**
Power	0.637	0.640	***0.670***	**0.675**	0.628	0.628	0.645
Contraceptive	0.409	0.409	0.408	0.409	**0.413**	0.408	**0.413**
Iris	**0.886**	0.867	0.853	0.856	0.860	0.860	***0.879***
Yeast	0.292	0.305	***0.332***	**0.333**	0.297	0.294	0.320
Gas	0.901	0.901	0.902	***0.907***	0.901	0.904	**0.929**
Gestures	0.849	0.842	***0.850***	***0.850***	0.843	0.846	**0.894**

5.2 Paired Learner

Synthetic data. The results of the experiments using PL AMs are shown via Nemenyi plots on Figure 1c,d. With all available AMs many bandit based adaptive strategies achieve comparable average performance to the original PL algorithm, with both LinUCB Hybrid(w) and KL-UCB(w) being slightly better. LinUCB and ϵ-greedy based strategies were less successful for this case. Similarly for PL custom AMs KL-UCB(w) shows a slightly better performance.

Real data. Results on real data on all AMs (Table 1b) show a slightly different picture, with PL having the top accuracy for most of the datasets. However, the performance of *PL* is more than 1% higher than the runner-up algorithm only in two cases. Among bandit based methods both LinUCB and KL-UCB appear to be strong contenders, while ϵ-greedy is lagging behind. Similar situation is observed using custom AMs only (Table 2b). Here KL-UCB is a strong runner up to PL.

6. Conclusions

In this paper we have used several bandit algorithms for learning the adaptive strategies for streaming data given a set of adaptive mechanisms on-the-fly. These methods provide easy automation of the adaptation process, avoiding the need to come up with the custom adaptation strategy, some of them offering theoretical guarantees in addition. The results show that some bandit algorithms, such as LinUCB and KL-UCB compare favourably and often beat the custom streaming methods, particularly with warm-start. These algorithms are not computationally intensive, with the most time consuming operation being an inverse calculation of d^2 dimensional matrix at each step for LinUCB. Further research includes identifying a well-suited set of context features for contextual bandit algorithms. Another direction is considering a full-information setting, where all of AM would be updated at each time step instead of limited-information bandit setting, where a reward estimate of only the chosen AM is updated. This is likely to result in faster convergence. To improve the convergence transfer-learning type methods can be considered as well, where rewards learned on one dataset can be used for another dataset.

References

Edgar Anderson. The Species Problem in Iris. *Annals of the Missouri Botanical Garden*, 23(3):457, sep 1936.

S Bach and M Maloof. A bayesian approach to concept drift. In *Advances in Neural Information* . . . , pages 1–9, 2010.

Rashid Bakirov and Bogdan Gabrys. Investigation of Expert Addition Criteria for Dynamically Changing Online Ensemble Classifiers with Multiple Adaptive Mechanisms. In Harris Papadopoulos, Andreas. Andreou, Lazaros Iliadis, and Ilias Maglogiannis, editors, *Artificial Intelligence Applications and Innovations*, volume 412, pages 646–656, 2013. ISBN 9783642411410.

Rashid Bakirov, Bogdan Gabrys, and Damien Fay. Automated adaptation strategies for stream learning. *Machine Learning (in print)*, dec 2021.

Bilge Celik and Joaquin Vanschoren. Adaptation Strategies for Automated Machine Learning on Evolving Data. arXiv pre-print. jun 2020. URL `http://arxiv.org/abs/2006.06480`.

Yanping Chen, Eamonn Keogh, Bing Hu, Nurjahan Begum, Anthony Bagnall, Abdullah Mueen, and Gustavo Batista. The UCR Time Series Classification Archive, jul 2015.

R. A. Fisher. The Use of Multiple Measurements in Taxonomic Problems. *Annals of Eugenics*, 7(2): 179–188, sep 1936. ISSN 20501420.

Aurélien Garivier and Olivier Cappé. The kl-ucb algorithm for bounded stochastic bandits and beyond. In Sham M. Kakade and Ulrike von Luxburg, editors, *Proceedings of the 24th Annual Conference on Learning Theory*, volume 19 of *Proceedings of Machine Learning Research*, pages 359–376, Budapest, Hungary, 09–11 Jun 2011. PMLR. URL `http://proceedings.mlr.press/v19/garivier11a.html`.

M Harries. Splice-2 comparative evaluation: Electricity pricing. Technical report. The University of South Wales. Technical report, The University of South Wales, 1999.

Petr Kadlec and Bogdan Gabrys. Architecture for development of adaptive on-line prediction models. *Memetic Computing*, 1(4):241–269, sep 2009. ISSN 1865-9284.

J Z Kolter and M A Maloof. Dynamic weighted majority: An ensemble method for drifting concepts. *The Journal of Machine Learning Research*, Volume 8,:2755–2790, 2007.

Tor Lattimore and Csaba Szepesvári. *Bandit Algorithms*. Cambridge University Press, 2020. doi: 10.1017/9781108571401.

Lihong Li, Wei Chu, John Langford, and Robert E. Schapire. A contextual-bandit approach to personalized news article recommendation. In *Proceedings of the 19th International Conference on World Wide Web*, WWW '10, page 661–670, New York, NY, USA, 2010. Association for Computing Machinery. ISBN 9781605587998. doi: 10.1145/1772690.1772758. URL `https://doi.org/10.1145/1772690.1772758`.

Renata C. B. Madeo, Clodoaldo A. M. Lima, and Sarajane M. Peres. Gesture unit segmentation using support vector machines: Segmenting gestures from rest positions. In *Proceedings of the 28th Annual ACM Symposium on Applied Computing*, SAC '13, page 46–52, New York, NY, USA, 2013. Association for Computing Machinery. ISBN 9781450316569. doi: 10.1145/2480362.2480373. URL `https://doi.org/10.1145/2480362.2480373`.

Jorge G. Madrid, Hugo Jair Escalante, Eduardo F. Morales, Wei-Wei Tu, Yang Yu, Lisheng Sun-Hosoya, Isabelle Guyon, and Michele Sebag. Towards AutoML in the presence of Drift: first results. jul 2019.

Manuel Martín Salvador, Marcin Budka, and Bogdan Gabrys. Adapting Multicomponent Predictive Systems using Hybrid Adaptation Strategies with Auto-WEKA in Process Industry. In *AutoML at ICML 2016*, number 2011, pages 1–8, 2016.

L.L. Minku, A.P. White, and Xin Yao. The Impact of Diversity on Online Ensemble Learning in the Presence of Concept Drift. *IEEE Transactions on Knowledge and Data Engineering*, 22(5): 730–742, may 2010. ISSN 1041-4347.

D Newman, S Hettich, C Blake, and C Merz. UCI repository of machine learning databases, 1998.

Ambuj Tewari and Susan A. Murphy. *From Ads to Interventions: Contextual Bandits in Mobile Health*, pages 495–517. Springer International Publishing, Cham, 2017. ISBN 978-3-319-51394-2. doi: 10.1007/978-3-319-51394-2_25. URL `https://doi.org/10.1007/978-3-319-51394-2_25`.

Alexander Vergara, Ramón Huerta, Tuba Ayhan, Margaret Ryan, Shankar Vembu, and Margie Homer. Gas sensor drift mitigation using classifier ensembles. In *Proceedings of the Fifth International Workshop on Knowledge Discovery from Sensor Data - SensorKDD '11*, pages 16–24, New York, New York, USA, aug 2011. ACM Press.

X Zhu. Stream Data Mining Repository, http://www.cse.fau.edu/~xqzhu/stream.html, 2010.

7. Supplementary material

Table 3: Algorithms hyper-parameters

Algorithm	**Hyper-parameter selection**
DWM	Weights decay factor $\beta = 0.5$, expert removal weight threshold $\theta = 0.01$
PL	Reactive learner window size $l = 20$, switching threshold $\theta = 1$
LinUCB	$\alpha = 0.5$
ϵ-greedy	$\epsilon = 0.1$
KL-UCB	$c = 0$

Table 4: Synthetic classification datasets used in experiments, with $\boldsymbol{N}$ instances and $\boldsymbol{C}$ classes, from (Bakirov and Gabrys, 2013). Column "Drift" specifies number of drifts/changes in data, the percentage of change in the decision boundary and its type. All datasets have 2 input features.

#	**Data type**	$\boldsymbol{N}$	$\boldsymbol{C}$	**Drift**	**Noise/overlap**
1	Hyperplane	600	2	2x50% rotation	None
2	Hyperplane	600	2	2x50% rotation	10% uniform noise
3	Hyperplane	600	2	9x11.11% rotation	None
4	Hyperplane	600	2	9x11.11% rotation	10% uniform noise
5	Hyperplane	640	2	15x6.67% rotation	None
6	Hyperplane	640	2	15x6.67% rotation	10% uniform noise
7	Hyperplane	1500	4	2x50% rotation	None
8	Hyperplane	1500	4	2x50% rotation	10% uniform noise
9	Gaussian	1155	2	4x50% switching	0-50% overlap
10	Gaussian	1155	2	10x20% switching	0-50% overlap
11	Gaussian	1155	2	20x10% switching	0-50% overlap
12	Gaussian	2805	2	4x49.87% passing	0.21-49.97% overlap
13	Gaussian	2805	2	6x27.34% passing	0.21-49.97% overlap
14	Gaussian	2805	2	32x9.87% passing	0.21-49.97% overlap
15	Gaussian	945	2	4x52.05% move	0.04% overlap
16	Gaussian	945	2	4x52.05% move	10.39% overlap
17	Gaussian	945	2	8x27.63% move	0.04% overlap
18	Gaussian	945	2	8x27.63% move	10.39% overlap
19	Gaussian	945	2	20x11.25% move	0.04% overlap
20	Gaussian	945	2	20x11.25% move	10.39% overlap
21	Gaussian	1890	4	4x52.05% move	0.013% overlap
22	Gaussian	1890	4	4x52.05% move	10.24% overlap
23	Gaussian	1890	4	8x27.63% move	0.013% overlap
24	Gaussian	1890	4	8x27.63% move	10.24% overlap
25	Gaussian	1890	4	20x11.25% move	0.013% overlap
26	Gaussian	1890	4	20x11.25% move	10.24% overlap

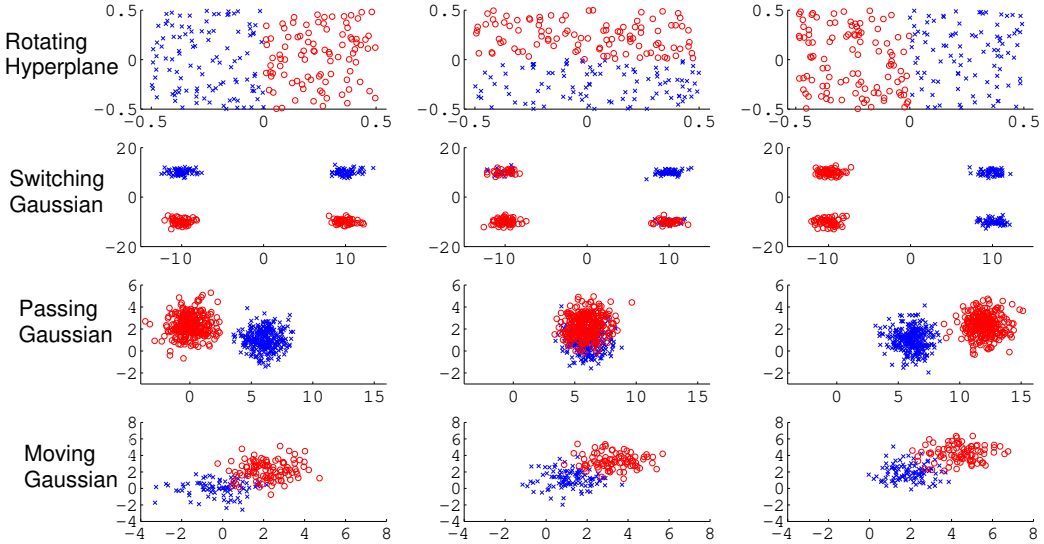

Figure 2: Synthetic datasets visualisation (Bakirov and Gabrys, 2013).

Table 5: Real world classification datasets.$\boldsymbol{N}$ stands for number of instances, $\boldsymbol{M}$ for number of features and $\boldsymbol{C}$ for number of classes.

#	Name	$\boldsymbol{N}$	$\boldsymbol{M}$	$\boldsymbol{C}$	Brief description
1	Power	4489	2	4	The task is prediction of hour of the day (03:00, 10:00, 17:00 and 21:00) based on supplied and transferred power measured in Italy. (Zhu, 2010; Chen et al., 2015).
2	Contra-ceptive	4419	9	3	Contraceptive dataset from UCI repository (Newman et al., 1998) with artificially added drift (Minku et al., 2010).
3	Iris	450	4	4	Iris dataset (Anderson, 1936; Fisher, 1936) with artificially added drift (Minku et al., 2010).
4	Yeast	5928	8	10	Yeast dataset from UCI repository (Newman et al., 1998) with artificially added drift (Minku et al., 2010).
5	Gas	13910	129	6	Dataset from chemical sensors utilized in simulations for discrimination task of 6 gases at various levels of concentrations (Vergara et al., 2011).
6	Gestures	9873	33	5	Dataset composed by features extracted from 7 videos with people gesticulating, for Gesture Phase Segmentation. (Madeo et al., 2013).
7	Electricity	27887	6	2	Widely used concept drift benchmark dataset thought to have seasonal and other changes as well as noise. Task is the prediction of whether electricity price rises or falls while inputs are days of the week, times of the day and electricity demands (Harries, 1999).