Trap and Replace: Defending Backdoor Attacks by Trapping Them into an Easy-to-Replace Subnetwork

Haotao Wang
University of Texas at Austin
htwang@utexas.edu

Junyuan Hong
Michigan State University
hongju12@msu.edu

Aston Zhang
Amazon Web Services
astonz@amazon.com

Jiayu Zhou
Michigan State University
jiayuz@msu.edu

Zhangyang Wang
University of Texas at Austin
atlaswang@utexas.edu

Abstract

Deep neural networks (DNNs) are vulnerable to backdoor attacks. Previous works have shown it extremely challenging to unlearn the undesired backdoor behavior from the network, since the entire network can be affected by the backdoor samples. In this paper, we propose a brand-new backdoor defense strategy, which makes it much easier to remove the harmful influence of backdoor samples from the model. Our defense strategy, *Trap and Replace*, consists of two stages. In the first stage, we bait and trap the backdoors in a small and easy-to-replace subnetwork. Specifically, we add an auxiliary image reconstruction head on top of the stem network shared with a light-weighted classification head. The intuition is that the auxiliary image reconstruction task encourages the stem network to keep sufficient low-level visual features that are hard to learn but semantically correct, instead of overfitting to the easy-to-learn but semantically incorrect backdoor correlations. As a result, when trained on backdoored datasets, the backdoors are easily baited towards the unprotected classification head, since it is much more vulnerable than the shared stem, leaving the stem network hardly poisoned. In the second stage, we replace the poisoned light-weighted classification head with an untainted one, by re-training it from scratch only on a small holdout dataset with clean samples, while fixing the stem network. As a result, both the stem and the classification head in the final network are hardly affected by backdoor training samples. We evaluate our method against ten different backdoor attacks. Our method outperforms previous state-of-the-art methods by up to 20.57%, 9.80%, and 13.72% attack success rate and on-average 3.14%, 1.80%, and 1.21% clean classification accuracy on CIFAR10, GTSRB, and ImageNet-12, respectively. Code is available at `https://github.com/VITA-Group/Trap-and-Replace-Backdoor-Defense`.

1 Introduction

Deep neural networks (DNNs) have been successfully used in many high-stakes applications such as autonomous driving and speech recognition authorization. However, the data used to train those systems are often collected from potentially insecure and unknown sources (e.g., crawled from the Internet or directly collected from end-users) [1, 2]. Such insecure data collection process opens the door for backdoor attackers to upload and distribute harmful training samples that can secretly inject malicious behaviors into the DNNs (e.g., recognizing a stop sign as a speed-limit sign). More specifically, backdoor attacks add premeditated backdoor triggers (e.g., a tiny square pattern or an invisible additive noise) to a small portion of training samples with the same target label. Such

36th Conference on Neural Information Processing Systems (NeurIPS 2022).

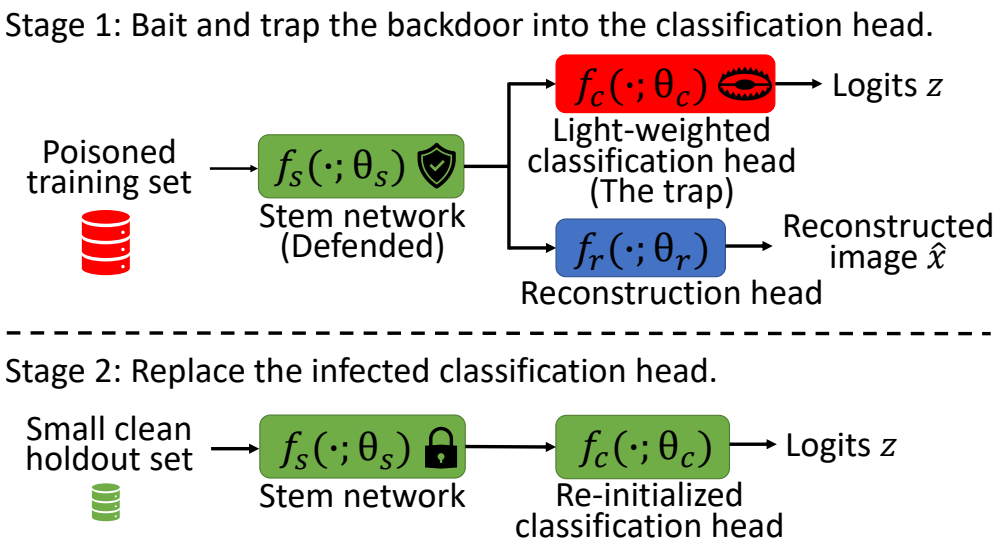

Figure 1: Overview of our Trap and Replace strategy. Each block represents a subnetwork. The lock icon indicates that the subnetwork is fixed, otherwise it is trainable by default. Green subnetworks are defended or trained only using clean samples (and thus are hardly infected by backdoor samples). The red one is the trap subnetwork used to bait and trap the backdoor attacks (and thus are infected).

backdoor triggers can mislead the network to learn an undesired strong correlation between the trigger and the target label, which is termed the *backdoor correlation*. As a result, if the attacker adds the trigger pattern to a test sample, it will be classified as the target label, regardless of its ground truth class. In this way, the model's behavior on test samples can be controlled by the attacker with the added backdoor trigger.

Previous works have shown that such backdoor correlations are easy to learn but hard to forget (or unlearn) by DNNs [3, 4, 5]. For example, Liu *et al.* [3] and Gu *et al.* [6] showed that simply fine-tuning a backdoored model on a small portion of clean samples is hardly effective to forget the already learned backdoor correlations. Li *et al.* [4] enhanced the above fine-tuning method with an extra attention distillation step. However, the performance of the new method in [4] is particularly sensitive to the type of underlying attack and data augmentation techniques [5]. Retraining a small portion of the network from scratch is also not effective (to be shown in our experiments), since the entire network may have been affected by the backdoor training samples. Retraining the entire or a large portion of the network from scratch using a small number of clean samples may succeed in removing the backdoor correlations, but it will significantly hurt the model performance since a huge amount of data is required to train DNNs from scratch.[1] Some previous works tried to identify and prune the neurons which are most heavily infected by backdoor training samples [3, 11]. However, the identification results for such "infected neurons" are noisy and can empirically fail as shown in [12, 5] (to be shown in our experiments, too). In summary, the challenge raises from the high-level freedom in model training: the backdoor samples can potentially infect any neurons in the entire network. With a limited amount of clean training samples, it is challenging for the defender to precisely locate and fix all those infected neurons.

To address this challenge, we propose a novel backdoor defense strategy named *Trap and Replace* (T&R), which makes it much easier to remove the learned backdoor correlations from the network. In a nutshell, T&R first baits and traps the backdoors in a small and easy-to-replace subnetwork, and then replaces the poisoned small subnetwork (i.e., the bait subnetwork) with an untainted one re-trained from scratch using a small amount of clean data.

As illustrated in Figure 1, this strategy has two stages. In the first stage (i.e., the bait-and-trap stage), we first divide the classification model into two subnetworks: a stem taking up most of the parameters and a light-weighted classification head. We then add an auxiliary head on top of the shared stem network to conduct an image reconstruction task. The entire model is trained end-to-end by jointly

[1] Data-efficient training such as semi-supervised learning and self-supervised learning are not naive solutions, since themselves are vulnerable to backdoor attacks [7, 8, 9, 10].

optimizing on the two tasks (i.e., image classification and reconstruction) using the poisoned training set. With the auxiliary image reconstruction task, backdoors can be effectively baited towards and trapped into the light-weighted classification head, while the shared stem is prevented from overfitting to the backdoor features. The **intuition** is that the auxiliary image reconstruction task encourages the stem network to keep sufficient low-level visual features that are hard-to-learn but semantically correct, protecting the stem network from overfitting to the easy-to-learn but semantically incorrect backdoor correlations. In contrast, we apply no defense mechanism on the light-weighted classification head, leaving it more vulnerable than the stem network. As a result, when trained on backdoored datasets, the backdoors are easily baited towards and trapped in the unprotected classification head, leaving the stem network hardly poisoned.

In the second stage, we replace the poisoned light-weighted classification head with an untainted one, as illustrated in Figure 1. Specifically, we re-initialize the classification head to random values, and then train it from scratch on a small holdout dataset with clean samples. It is feasible to re-train the classification head from scratch using only a small amount of clean samples, because it is light-weighted (e.g., only two convolutional and one fully connected layers in our experiments) and the shared stem obtained in stage 1 can already extract high-quality deep features. As a result, both the stem and the classification head in the final network are hardly affected by backdoor training samples.

We evaluate the effectiveness of Trap and Replace on three image classification datasets and against ten different backdoor attacks. Experimental results show Trap and Replace outperforms previous state-of-the-art methods by up to 20.57%, 9.80%, and 13.72% attack success rate (ASR) and in-average 3.14%, 1.80%, and 1.21% clean classification accuracy (CA) on CIFAR10, GTSRB, and ImageNet-12, respectively. We further show our method is robust to potential adaptive attacks, where the attacker is aware of the applied defense strategy and able to take countermoves.

2 Related work

2.1 Backdoor attack methods

Liu *et al.* [1] first successfully conducted backdoor/trojan attacks on DNNs, by adding pre-defined backdoor triggers (e.g., a square patch with a fixed pattern) onto the images and modifying the corresponding labels to the attacker-desired target label. Gu *et al.* [6] later showed that backdoor attacks can be successfully preserved during transfer learning. In other words, backdoors injected in pre-trained models can be transferred to downstream tasks. Yao *et al.* [13] proposed the latent backdoor attack (LBA), which targets the hidden layers instead of the output layer, so that the attack can better survive downstream transfer learning. Chen *et al.* [14] showed that backdoor images can also be generated by blending the backdoor trigger image with the clean images. The early backdoor attacks have two limitations making them potentially hard to survive careful human inspection. The first is that the triggers are usually small but still visible to humans. The second limitation is that traditional backdoor attacks are dirty-label backdoor attacks: they change the labels of backdoor training samples to the attacker-desired targeted label, leading to inconsistency between the content of the sample and its label.

To overcome the first limitation, Zhong *et al.* [15], Li *et al.* [16], and Li *et al.* [17] proposed invisible backdoor attacks which add small and invisible perturbations as backdoor triggers to clean images. Nguyen and Tran [18] used imperceptible warping-based triggers to bypass human inspection. More recently, Zeng *et al.* [19] proposed to generate smooth backdoor triggers using frequency information to prevent the severe high-frequency artifacts of previous attack methods.

To overcome the second limitation, clean-label backdoor attacks (i.e., attacks that do not require to modify the labels of backdoor training samples) have been proposed [20, 21, 22]. For example, Barni *et al.* [21] added ramp signals as the backdoor trigger to the images of the target class, without modifying the labels. The intuition of such attack is that the model tends to overfit the easy-to-learn ramp signals instead of the semantically meaningful but hard-to-learn object visual features. Thus, a strong backdoor correlation between the ramp signal and the target class will be learned by the model. With a similar underlying intuition, label-consistent backdoor attack (LCBA) [20] adds both adversarial noises and simple patch patterns onto the backdoor training images. This makes the semantically-correct visual features in backdoor training images hard to learn, since they are perturbed by adversarial noises. As a result, the model will focus on overfitting the easy-to-learn backdoor correlation (i.e., the strong correlation between the backdoor pattern and the ground truth

label) from the backdoor training samples. Zeng *et al.* [22] proposed a more practical clean-label backdoor attack which requires less prior information of the training set. Hidden trigger attacks [23] enjoy the benefits of both sides as a clean-label attack with invisible triggers.

2.2 Backdoor defense methods

Backdoor defense methods aim to obtain clean models without backdoors when trained on potentially poisoned data. As one of the earliest works on defending backdoor attacks, Tran *et al.* [24] proposed an outlier removal method based on the spectral signature to distinguish and remove backdoor samples from clean samples. Hayase *et al.* [25] improved upon [24] by using a more robust outlier removal method. Other outlier detection methods such as activation clustering [26], prediction consistency [27], and influence function [28] have also been used to detect backdoor samples.

In [3], a concurrent work with [24], the authors proposed another earliest backdoor defense method named Fine-Pruning (FP). Motivated by the empirical finding that clean and backdoor samples tend to activate different neurons, FP first prunes the neurons that are dormant on clean samples and then fine-tune the pruned network on a small number of clean samples. Later works in this line make improvements on locating the backdoor neurons (i.e., the neurons that are activated by backdoor samples but not clean samples) [11, 29]. Adversarial neuron perturbations (ANP) [11] prunes the sensitive neurons under adversarial perturbations to improve backdoor robustness. A very recent work [29] used Shapley value as a measure to prune backdoor neurons.

Robust training methods have also been used to prevent the learning of semantically-incorrect backdoor correlations during model training [30, 31, 32]. For example, Du *et al.* [30] used differentially private training [33] to prevent the learning of backdoor correlations. Using strong data augmentation methods such as MixUp [34] and MaxUp [35] can also benefit backdoor defense [31]. Self-supervised pre-training achieves promising results against backdoor attacks developed for supervised learning [32]. However, more recent works have successfully developed backdoor attacks tailored for self-supervised learning and contrastive learning [9, 10]. Adversarial training, which is originally proposed to improve model robustness against adversarial attacks [36, 37], has also been adapted to empirically improve robustness against backdoor attacks [38]. A recent work [39] further theoretically showed that backdoor filtering and adversarial robust generalization are nearly equivalent under assumptions.

Neural cleanse [40] set up the starting point for a new line of research [41, 42, 43]. This line of methods first inverts engineer the unknown backdoor trigger from the poisoned models, and then unlearns the backdoor using the synthesized trigger. A recent work [5] made improvements over the above methods by using a novel unlearning method that requires fewer presumptions about the backdoor trigger. As a result, the proposed method, named implicit backdoor adversarial unlearning (I-BAU), successfully defends a wide range of backdoor attacks with different trigger patterns. In contrast, previous methods in [41, 42, 43] all have failure cases, as shown in [5].

Recently, Li *et al.* [12] proposed a novel backdoor dense method named anti-backdoor learning (ABL), which largely outperforms previous methods. Specifically, ABL uses a novel local gradient ascent loss (LGA) to isolate backdoor examples from clean training samples: Using the LGA loss, backdoor training samples will have statistically lower loss values than clean training samples. As a result, a small amount of backdoor samples can be successfully isolated, which are further used to unlearn the backdoor correlations. One limitation of ABL, as discussed in the original paper, is that the loss value can be a noisy measure to distinguish backdoor samples under certain cases. Also ABL requires careful hyper-parameter tuning [12]. There is also another line of works focusing on detecting backdoor-infected models [44, 45, 46, 47, 48]. Their main goal is to predict whether a given model is infected by backdoor attacks, instead of preventing the learning of backdoor correlations.

Our T&R is a brand-new backdoor defense strategy that does not fall into any of the above categories. Among all categories, T&R is most relevant with the pruning-based methods [3, 11, 29]: we share the same ultimate goal to remove infected neurons. However, unlike those methods which spend much effect in locating the infected neurons, our method take the initiative to set a trap in the model to bait and trap the backdoor. As a result, we do not need to locate the infected neurons, since we know exactly where the trap is set. The only thing we need is to replace the infected trap (i.e., a light-weighted subnetwork) with an untainted one trained on a small clean dataset.

More related works are discussed in Appendix A.

3 Method

In this section, we first describe the problem setting and define the notations in Section 3.1. We then formally present our proposed method in Section 3.2.

3.1 Problem setting and notations

We consider the application scenario where the defender collects training data from untrusted sources (e.g., uploaded by untrusted users or from the Internet) which potentially contains backdoor samples, and then trains the model using the collected data. The goal of the defender is to obtain a clean model using the collected backdoored dataset, with the help of a small clean holdout set from the same distribution of the training set.[2]

Specifically, the training set $\mathcal{D}_{\text{train}}$ contains an unknown portion of backdoor training samples. We define the poison ratio α as the percentage of the poisoned training samples in the entire training set $\mathcal{D}_{\text{train}}$. Following previous works [3, 4, 11, 5], we assume that the defender has access to a small holdout set $\mathcal{D}_{\text{h}}$ with clean samples (i.e., samples without backdoor triggers). For evaluation, we have two test sets: a clean test set $\mathcal{D}_{\text{test}}^{\text{clean}}$ with only clean test samples, and a backdoor test set $\mathcal{D}_{\text{test}}^{\text{bd}}$ with backdoor test samples generated by applying backdoor patterns onto the samples in $\mathcal{D}_{\text{test}}^{\text{clean}}$. The goal of backdoor defense methods is to reduce the attack success rate (ASR) on $\mathcal{D}_{\text{test}}^{\text{bd}}$, while keeping high clean accuracy (CA) on $\mathcal{D}_{\text{test}}^{\text{clean}}$.

As illustrated in Figure 1, our framework has three subnetworks: a stem network f_s with parameters θ_s, a light weighted classification head f_c with parameters θ_c, and an auxiliary image reconstruction head f_r with parameters θ_r. For an input image x, the stem network outputs a hidden feature $h(x) = f_s(x; \theta_s)$. The classification head outputs the classification logits $z(x) = f_c(h(x); \theta_c)$. The image reconstruction head outputs the reconstructed image $\hat{x}(x) = f_r(h(x); \theta_r)$.

3.2 The proposed method

Our Trap and Replace (T&R) backdoor defense strategy consists of two stages. Below we formally describe the process of each stage.

Stage 1: Bait and trap the backdoor into the classification head. As intuitively explained in Section 1, we use the auxiliary image reconstruction task to regularize the stem network f_s to keep enough semantically correct low-level visual features. The stem network is thus protected from overfitting to the easy-to-learn but semantically incorrect backdoor correlations.[3] In contrast, we apply no defense mechanisms on the light-weighted classification head f_c, leaving it more vulnerable than the stem. As a result, the backdoor attacks are easily baited towards and trapped in the classification head, leaving the stem network hardly infected.

Specifically, we jointly train the classification task and the auxiliary image classification task on the poisoned training set $\mathcal{D}_{\text{train}}$. The entire model is updated end-to-end. More formally, we solve the following optimization problem:

$$\min_{\theta_s, \theta_c, \theta_r} \mathbb{E}_{x \sim \mathcal{D}_{\text{train}}} \mathcal{L}_{\text{clf}}(x) + \lambda_1 \mathcal{L}_{\text{rec}}(x), \tag{1}$$

where $\mathcal{L}_{\text{clf}}(x)$ and $\mathcal{L}_{\text{rec}}(x)$ are the image classification and reconstruction losses, respectively, and λ_1 is the trade-off weight between the two loss terms. The image classification loss $\mathcal{L}_{\text{clf}}(x)$ is simply the cross-entropy loss between logits $z(x)$ and corresponding ground truth label $y(x)$. The reconstruction loss is the ℓ_2 loss between the original and reconstructed images with the total variation regularization: $\mathcal{L}_{\text{rec}}(x) = \|\hat{x}(x) - x\|_2 + \lambda_2 \text{TV}(\hat{x}(x))$, where $\text{TV}(\cdot)$ is the total variation function, which is widely used to improve the spatial smoothness and visual quality of the reconstructed image $\hat{x}(x)$ [49, 50], and λ_2 is the loss trade-off weight.

[2] The relation and difference in application scenario with previous works are discussed in Appendix D.

[3] In contrast, the stem network obtained from normal training (i.e., without the auxiliary image reconstruction task) will overfit to the semantically incorrect but easy-to-learn backdoor correlations. See our ablation study in Section 4.4 (Table 4) for details.

Stage 2: Replace the infected classification head. After stage 1, the stem network keeps enough semantically correct low-level visual features. Now the missing piece of a disinfected image classifier is an untainted light-weighted classification head, which can be obtained by re-training f_c from scratch using the small clean holdout set $\mathcal{D}_{\text{h}}$. Specifically, we first discard the auxiliary image reconstruction head f_r, and re-initialize the classification head parameters θ_c to random values. We then re-train θ_c on $\mathcal{D}_{\text{h}}$, while keeping the stem parameters θ_s fixed to the values learned in stage 1. More formally, we solve the below optimization problem:

$$\min_{\theta_c} \mathbb{E}_{x \sim \mathcal{D}_{\text{h}}} \mathcal{L}_{\text{clf}}(x). \tag{2}$$

Note that solving Eq. (2) from scratch is feasible since f_c is light-weighted. To further prevent overfitting on the small $\mathcal{D}_{\text{h}}$, we apply Dropout (with 50% ratio) [51] and label smoothing (with smoothing factor 0.1) [52] as regularization when solving Eq. (2). Finally, we summarize the workflow of T&R in Algorithm 1.

Algorithm 1: Trap and Replace (T&R)

Input: Poisoned training set $\mathcal{D}_{\text{train}}$, a small holdout set $\mathcal{D}_{\text{h}}$.
Output: A disinfected image classifier $f_c(f_h(\cdot;\theta_h);\theta_c)$.

// Stage 1:
Randomly initialize θ_h, θ_c, and θ_r.
Optimize θ_h, θ_c, and θ_r on $\mathcal{D}_{\text{train}}$ according to Eq. (1).
// Stage 2:
Randomly initialize θ_c.
Optimize θ_c on $\mathcal{D}_{\text{h}}$ according to Eq. (2).

4 Experiments

4.1 Experimental settings

Datasets and models Following [12, 5, 32], we conduct experiments on CIFAR10 [53], GTSRB [54], and ImageNet-12 (a subset of ImageNet [55] with 12 classes); we use WideResNet (WRN16-1) [56] on the first two datasets and ResNet34 [57] on ImageNet-12.

Backdoor attacks We evaluate the effectiveness of our method against 10 different backdoor attacks. Specifically, we use all 7 attacks in [5]: BadNet with white square pattern (denoted as BadNet-White) [6], Blend [14], ℓ_0-Invisible [16], ℓ_2-Invisible [16], Smooth [19], Trojan with square pattern (denoted as Trojan-SQ) [1], and Tojan with watermark pattern (denoted as Trojan-WM) [1]. We further include 3 more attacks used in [12]: BadNet with grid square pattern (denoted as BadNet-Grid) [6], label-consistent backdoor attack (LCBA) [20], and SIG [21]. Note that LCBA and SIG are clean-label attacks and all others are dirty-label attacks. Following [12], we set poison ratio $\alpha = 10\%$ for all attacks (i.e., 5000 training images are poisoned in CIFAR10). Detailed settings and visualization for each attack are shown in Appendix B.1. As pointed out by [12], some attacks fail to be reproduced following their original papers on GTSRB and Imagenet-12. Following the suggestions in [12], we omit CLBA attack on GTSRB and use four attacks on ImageNet-12.

Baseline methods We compare our method with six baseline methods: normal training (denoted as "No defense"), differentially private training (DP) [30], NAD [4], ANP [11], ABL [12], and I-BAU [5]. The last three are recent state-of-the-art methods that have been shown to largely outperform previous baselines. The results of DP are only shown in Appendix due to space limit (and also since it achieves the least competitive results). We omit ANP and I-BAU on ImageNet-12, since the original papers only provided experimental settings on CIFAR10 and we fail to produce reasonable results on ImageNet after careful hyper-parameter tuning.

Evaluation measures Following [12, 5], we use attack success rate (ASR) and clean accuracy (CA) as the evaluation measures. ASR is defined as the percentage of backdoor test samples that can successfully fool the model to the target class desired by the attacker. CA is simply the classification accuracy on a clean test set. The smaller ASR (↓) and the larger CA (↑) indicate better backdoor defense performance.

Defense settings Previous works usually use 10% of the training set as the clean holdout set [3, 4]. In this paper, we consider a more challenging setting where less clean holdout data are available for defenders. Specifically, for all methods requiring a clean holdout set (i.e., NAD, ANP, I-BAU, and our T&R), we use 5% of the training set as the clean holdout set on CIFAR10 and GTSRB. The ratio is still set to 10% on ImageNet-12 for all methods since it is a more challenging dataset. Please see Appendix B for more details on experimental settings.

4.2 Main results

Table 1: Results on CIFAR10 using WRN16-1. The best results are shown in bold. All numbers are reported in percentages.

	No defense		NAD		ANP		ABL		I-BAU		Ours	
Attack method	**ASR**	**CA**	**ASR**	**CA**	**ASR**	**CA**	**ASR**	**CA**	**ASR**	**CA**	**ASR**	**CA**
BadNet-Grid	99.98	**88.36**	8.60	80.23	2.64	84.55	3.20	86.35	8.24	81.34	**1.21**	84.42
BadNet-White	96.91	**88.87**	12.80	79.68	3.68	85.74	9.32	80.32	8.80	86.17	**3.14**	83.96
Blend	99.11	**88.95**	10.56	81.89	**5.62**	82.35	19.91	80.63	12.27	75.18	10.59	83.82
ℓ_0-Invisible	99.93	**89.36**	30.25	76.84	15.76	72.5	16.76	76.73	9.21	81.15	**2.91**	84.04
ℓ_2-Invisible	100.00	**89.28**	10.06	75.63	22.97	70.52	7.49	76.82	2.64	82.48	**0.74**	84.01
Smooth	98.14	**89.24**	15.68	79.10	33.42	77.49	20.21	70.79	24.80	67.93	**4.23**	83.63
Trojan-SQ	98.23	**89.64**	12.52	80.56	23.84	72.06	**3.16**	80.44	16.61	83.27	6.54	79.92
Trojan-WM	99.61	**89.48**	33.64	79.60	18.04	75.66	7.31	84.89	**4.55**	85.30	12.66	79.97
SIG	99.93	**89.27**	3.20	75.24	0.05	85.67	8.79	60.07	1.89	77.05	**0.02**	82.97
LCBA	90.42	**86.35**	10.64	77.82	**1.02**	84.21	6.54	78.56	8.88	78.05	5.41	82.57
Average	97.95	**88.54**	14.79	78.66	12.70	79.08	10.27	77.56	9.79	79.79	**4.75**	82.93

Table 2: Results on GTSRB. The best results are shown in bold. All numbers are reported in percentages.

	No defense		NAD		ANP		ABL		I-BAU		Ours	
Attack method	**ASR**	**CA**	**ASR**	**CA**	**ASR**	**CA**	**ASR**	**CA**	**ASR**	**CA**	**ASR**	**CA**
BadNet-Grid	100	**96.36**	1.62	93.56	8.97	95.44	4.11	95.52	5.56	95.36	**0.20**	95.94
BadNet-White	96.32	**96.11**	0.96	90.61	12.68	92.06	**0.00**	95.14	6.63	95.55	0.01	95.74
Blend	99.95	**96.50**	5.64	91.26	20.36	90.53	4.94	92.61	**0.00**	82.03	1.98	95.62
ℓ_0-Invisible	100	**95.50**	25.60	91.35	34.96	88.54	**0.60**	**96.39**	4.73	94.31	1.32	95.87
ℓ_2-Invisible	99.93	**96.81**	12.43	72.69	24.83	90.41	100	94.74	9.83	94.60	**0.03**	96.10
Smooth	100	**96.58**	33.20	75.74	37.95	82.56	32.24	76.70	2.68	94.74	**0.11**	96.12
Trojan SQ	97.75	**96.53**	1.52	90.56	12.06	90.74	**0.45**	95.88	5.71	94.49	1.47	95.17
Trojan WM	100	**96.68**	1.58	92.26	25.68	88.64	**0.55**	95.41	7.47	95.30	7.06	91.95
SIG	87.51	**96.32**	50.68	88.56	20.60	82.34	66.80	96.50	10.04	94.53	**0.54**	94.56
Average	97.94	**96.38**	16.45	87.40	22.01	89.03	23.30	93.21	5.85	93.43	**1.41**	95.23

Table 3: Results on ImageNet-12. The best results are shown in bold. All numbers are reported in percentages.

	No defense		NAD		ABL		Ours	
Attack method	**ASR**	**CA**	**ASR**	**CA**	**ASR**	**CA**	**ASR**	**CA**
BadNet-Grid	99.67	**74.17**	13.67	71.67	3.59	74.06	**0.67**	72.64
Blend	99.17	**74.83**	33.50	70.17	25.06	70.12	**11.33**	67.33
Trojan-WM	100	**77.33**	29.33	73.33	**3.26**	72.08	7.52	70.83
SIG	86.00	71.67	19.67	70.83	7.67	67.01	**5.33**	**77.33**
Average	96.21	**74.50**	24.04	71.50	9.89	70.82	**6.21**	72.03

The main results on CIFAR10, GTSRB, and ImageNet-12 are shown in Table 1, 2, and 3, respectively. As we can see, our method largely outperforms previous state-of-the-art methods in terms of both

ASR and CA on all three datasets. Specifically, on CIFAR10, our method outperforms I-BAU (the most competitive baseline method) by 20.57% ASR against Smooth attack, 10.07% ASR against Trojan-SQ attack, and 3.14% average CA. On GTSRB dataset, our method outperforms I-BAU by 9.80% ASR against ℓ_2-Invisible attack, 9.50% ASR against SIG attack, and 1.80% average CA. On ImageNet-12 dataset, our method outperforms ABL by 13.72% ASR against Blend attack, 3.68% average ASR, and 1.21% average CA.

Moreover, we can observe that our method has almost no failure cases on all three datasets. In contrast, all baseline methods have failure cases, with either a significant drop in CA compared with normal training (i.e., "No defense") or an unacceptably high ASR. For example, ABL fails on ℓ_2-Invisible attack and SIG attack on GTSRB, and I-BAU fails on Smooth attack on CIFAR10 and Blend attack on GTSRB.

4.3 Is the stem network really backdoor-free?

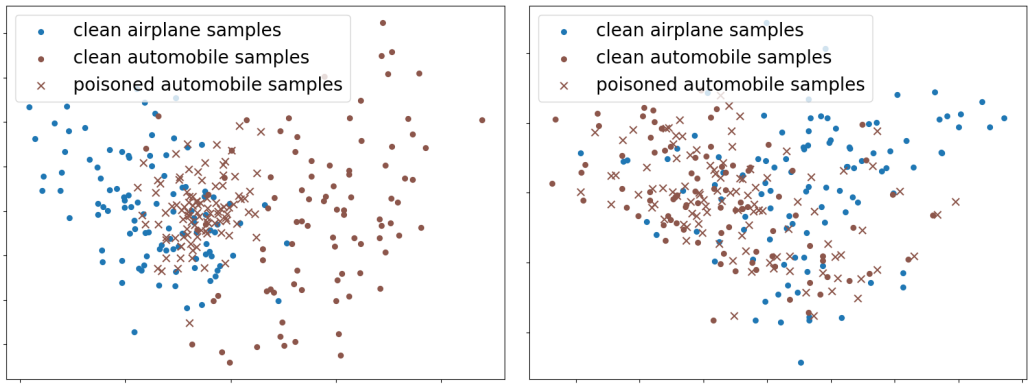

(a) No defense
(without image reconstruction head)

(b) Our T&R
(with image reconstruction head)

Figure 2: Output feature scatters of the stem network f_s when trained without (left) and with (right) the auxiliary image reconstruction head. Principle component analyses (PCA) is applied to project the features to two-dimensional space. Three types of test samples are visualized: clean "airplane" samples, clean "automobile" samples, and backdoored "automobile" samples (i.e., automobile images with ℓ_2-Invisible pattern). Both models are trained on CIFAR10 dataset poisoned by ℓ_2-Invisible attack which aims to map the backdoor pattern to the target "airplane".

In this section, we verify our assumption that the image reconstruction task can protect the stem network from overfitting to the backdoor correlations, by visualizing the feature scatters. Specifically, we compare the output features of the stem network f_s when trained with or without the auxiliary image reconstruction task. We visualize the feature distributions of clean "airplane" samples, clean "automobile" samples, and poisoned "automobile" samples via PCA in Figure 2.

As shown in Figure 2(a), without the auxiliary image reconstruction task, the stem network f_s maps poisoned "automobile" samples to the feature space of clean "airplane" samples instead of the clean "automobile" feature space. This demonstrates that f_s has learned the backdoor correlation: It ignores the semantic features related to "automobile" in the poisoned "automobile" samples, but overfits the semantically-incorrect backdoor correlations between the backdoor pattern and the backdoor target "airplane". In contrast, as shown in Figure 2(b), when trained with the image reconstruction head, clean and poisoned "automobile" samples are projected to similar feature space, which is different from the "airplane" feature space. This indicates that f_s learns semantically-correct features, instead of the backdoor correlations, on the poisoned samples. In conclusion, the visualization results show that the auxiliary image reconstruction task successfully hinders the stem network from learning the backdoor correlations.

4.4 Ablation study

The importance of the auxiliary image reconstruction task In this paragraph, we show the importance of two building blocks in T&R: the auxiliary image reconstruction task in stage 1, and the re-training of the classification head in stage 2. The results are shown in Table 4. As shown in the first row, if we remove the auxiliary image reconstruction task in stage 1, the model will not effectively unlearn the backdoor correlations even we retrain the classification head from scratch. For example, the ASRs of ℓ_2-Invisible and Trojan-WM are still as high as 99.99% and 51.87%, respectively. This indicates that without the auxiliary image reconstruction task, the backdoor training samples have infected a large portion of the network, including both the classification head and the stem network. In contrast, with the help of the auxiliary image reconstruction task, we successfully trapped the backdoor correlations into the light-weighted classification, while leaving the stem network largely uninfected. On the other hand, as shown in the second row in Table 4, using the auxiliary image reconstruction task alone will not directly reduce ASR, since the classification head is still infected. In conclusion, both building blocks are necessary: The defense will fail with either one missing.

Table 4: Ablation study on the building components of T&R using CIFAR10. In the last row, we report the mean and standard deviation of the results over three random runs of our method.

Auxiliary image reconstruction task	Replace classification head	ℓ_2-Invisible		Trojan-WM		SIG		LCBA	
		ASR	**CA**	**ASR**	**CA**	**ASR**	**CA**	**ASR**	**CA**
✗	✓	99.99	85.08	51.87	84.26	26.96	84.03	45.81	84.31
✓	✗	99.96	89.06	99.81	88.50	97.24	81.10	92.46	81.22
✓	✓	**0.72** ± 0.09	83.72 ± 0.25	**12.01** ± 1.16	80.01 ± 0.33	**0.01** ± 0.01	82.99 ± 0.03	**5.37** ± 0.45	82.47 ± 0.11

We also report the error bars of our method in the last row of Table 4. Specifically, we run our method three times with different random seeds and report the mean (μ) and standard deviation (σ) of ASR and CA in the form of $\mu \pm \sigma$. As we can see, the performance of our method is statistically stable under all four different attacks.

From which layer should we separate the stem and classification head? The ablation study results on the stem-head separation layer are shown in Table 5. As we can see, if the stem contains too many layers (e.g., as in the first row), the backdoor defense will fail, since it is hard to trap all the backdoors in too tiny a classification head (e.g., only one fully connected layer as in the first row). On the other hand, if the head contains too many layers (e.g, as in the third row), the backdoor defense will be successful, but CA will significantly drop. This is because, with a limited amount of holdout clean samples, it is infeasible to re-train too large a classification head from scratch. In summary, a properly sized classification head is important for the practical success of our method.

Table 5: Ablation study on the stem-head separation layer. Experiments are conducted on CIFAR10 with WRN16-1 backbone, which has a total of 13 convolutional and 1 fully connected (FC) layers. In the first row, f_c has only one FC layer, and all convolutional layers belong to f_s. The second row is our default setting, where f_c has the last two convolutional layers and the FC layer. The best results are shown in bold and the second-best ones are underlined.

Number of layers		Blend		ℓ_2-Invisible		Smooth		Trojan-WM	
f_s	f_c	**ASR**	**CA**	**ASR**	**CA**	**ASR**	**CA**	**ASR**	**CA**
13	1	97.41	**88.04**	99.99	**87.93**	96.02	**87.60**	99.63	**87.52**
11	3	<u>10.59</u>	<u>83.82</u>	<u>0.74</u>	<u>84.01</u>	<u>4.23</u>	<u>83.63</u>	**12.66**	<u>79.97</u>
9	5	**3.01**	74.99	**0.37**	73.50	**4.17**	73.96	<u>13.83</u>	77.36

Ablation study on poison ratio In this paragraph, we study the performance of T&R under different poison ratios. Specifically, we set the poison ratio α to 5%, 10% (the default value used in our main experiments), and 20%, which are the popular values used in previous works [12, 5]. We also compare T&R with I-BAU, which is the most competitive baseline as shown in Table 1, under these different poison ratios. The results are summarized in Table 6. As we can see, the advantage of our method holds across different poison ratios.

Table 6: Ablation study on the poison ratio α using CIFAR10. The best results are shown in bold.

α	Defense method	Blend		ℓ_2-Invisible		Smooth		Trojan-WM	
		ASR	**CA**	**ASR**	**CA**	**ASR**	**CA**	**ASR**	**CA**
5%	Ours	**9.57**	**83.52**	**0.54**	**84.21**	**2.04**	**83.96**	7.61	80.12
	I-BAU	10.16	81.96	1.68	81.04	8.58	80.92	**5.34**	**82.69**
10%	Ours	**10.59**	**83.82**	**0.74**	**84.01**	**4.23**	**83.63**	12.66	79.97
	I-BAU	12.27	75.18	2.64	82.48	24.80	67.93	**4.55**	**85.30**
20%	Ours	**8.74**	**82.15**	**0.84**	**84.25**	**3.51**	**82.96**	14.28	79.84
	I-BAU	15.57	81.06	4.38	83.06	16.69	80.44	**6.94**	**83.33**

More experimental results, including results against potential adaptive attack, ablation study on hyper-parameters, ablation study on the size of clean holdout set $\mathcal{D}_{\mathrm{h}}$, and results on non-poisoned datasets (i.e., when poison ratio $\alpha = 0$), are presented in Appendix C.

5 Discussion

The **major finding** in this paper is that the auxiliary image reconstruction loss can successfully trap backdoors into a small subnetwork while preserving the rest of the network largely uncontaminated, as illustrated in Figure 2. The **impact** of this finding is that it provides a promising ***decrease-and-conquer*** strategy for backdoor defense. Since the stem network is largely uncontaminated, defenders only need to tackle the small backdoored subnetwork, which is easier than sanitizing the entire network. This finding inspires multiple **future work** directions. First, our "trapping" strategy can potentially be combined with previous pruning-based backdoor neuron removal methods [11, 29] for better results. This is because it reduces the search space of potential backdoor neurons: We only need to search and remove backdoored neurons in the small backdoored subnetwork, instead of the entire network as done previously in [11, 29]. Second, although sufficiently effective against existing backdoor attacks, the image reconstruction loss is not guaranteed to be the best option for the "trapping" strategy, and one may research better alternatives as future work.

Limitation Our method has less flexible application scenario compared with previous backdoor defense methods, since it requires the backdoored training set. Most previous defense methods [3, 4, 5] take the backdoored model, instead of the original backdoored training set, as input. Unlike those methods, our method cannot sanitize the backdoored models when the backdoored training set is not available. With that said, the application scenario of our method is still popular in real-world applications. Please see Appendix D for details.

6 Conclusion

In this paper, we show that an auxiliary image reconstruction loss can successfully hinder the learning of backdoor attacks in image classification tasks. Based on this observation, we propose a brand-new backdoor defense strategy named Trap and Replace (T&R). Empirical results on three image classification datasets show the advantage of our method over previous state-of-the-art methods.

Acknowledgement

This material is based in part upon work supported by the National Science Foundation under Grant IIS-2212174, IIS-2212176, IIS-1749940, and Office of Naval Research N00014-20-1-2382.

References

[1] Yingqi Liu, Shiqing Ma, Yousra Aafer, Wen-Chuan Lee, Juan Zhai, Weihang Wang, and Xiangyu Zhang. Trojaning attack on neural networks. In *Network and Distributed System Security Symposium*, 2017.

[2] Avi Schwarzschild, Micah Goldblum, Arjun Gupta, John P Dickerson, and Tom Goldstein. Just how toxic is data poisoning? A unified benchmark for backdoor and data poisoning attacks. In *International Conference on Machine Learning*, pages 9389–9398, 2021.

[3] Kang Liu, Brendan Dolan-Gavitt, and Siddharth Garg. Fine-pruning: Defending against backdooring attacks on deep neural networks. In *International Symposium on Research in Attacks, Intrusions, and Defenses*, pages 273–294, 2018.

[4] Yige Li, Xixiang Lyu, Nodens Koren, Lingjuan Lyu, Bo Li, and Xingjun Ma. Neural attention distillation: Erasing backdoor triggers from deep neural networks. In *International Conference on Learning Representations*, 2020.

[5] Yi Zeng, Si Chen, Won Park, Zhuoqing Mao, Ming Jin, and Ruoxi Jia. Adversarial unlearning of backdoors via implicit hypergradient. In *International Conference on Learning Representations*, 2022.

[6] Tianyu Gu, Kang Liu, Brendan Dolan-Gavitt, and Siddharth Garg. BadNets: Evaluating backdooring attacks on deep neural networks. *IEEE Access*, 7:47230–47244, 2019.

[7] Zhicong Yan, Gaolei Li, Yuan Tian, Jun Wu, Shenghong Li, Mingzhe Chen, and H Vincent Poor. DeHiB: Deep hidden backdoor attack on semi-supervised learning via adversarial perturbation. In *AAAI Conference on Artificial Intelligence*, pages 10585–10593, 2021.

[8] Nicholas Carlini. Poisoning the unlabeled dataset of semi-supervised learning. In *USENIX Security Symposium*, pages 1577–1592, 2021.

[9] Aniruddha Saha, Ajinkya Tejankar, Soroush Abbasi Koohpayegani, and Hamed Pirsiavash. Backdoor attacks on self-supervised learning. In *IEEE Conference on Computer Vision and Pattern Recognition*, 2022.

[10] Nicholas Carlini and Andreas Terzis. Poisoning and backdooring contrastive learning. In *International Conference on Learning Representations*, 2022.

[11] Dongxian Wu and Yisen Wang. Adversarial neuron pruning purifies backdoored deep models. In *Advances in Neural Information Processing Systems*, 2021.

[12] Yige Li, Xixiang Lyu, Nodens Koren, Lingjuan Lyu, Bo Li, and Xingjun Ma. Anti-backdoor learning: Training clean models on poisoned data. In *Advances in Neural Information Processing Systems*, 2021.

[13] Yuanshun Yao, Huiying Li, Haitao Zheng, and Ben Y Zhao. Latent backdoor attacks on deep neural networks. In *ACM SIGSAC Conference on Computer and Communications Security*, pages 2041–2055, 2019.

[14] Xinyun Chen, Chang Liu, Bo Li, Kimberly Lu, and Dawn Song. Targeted backdoor attacks on deep learning systems using data poisoning. *arXiv preprint arXiv:1712.05526*, 2017.

[15] Haoti Zhong, Cong Liao, Anna Cinzia Squicciarini, Sencun Zhu, and David Miller. Backdoor embedding in convolutional neural network models via invisible perturbation. In *ACM Conference on Data and Application Security and Privacy*, pages 97–108, 2020.

[16] Shaofeng Li, Minhui Xue, Benjamin Zi Hao Zhao, Haojin Zhu, and Xinpeng Zhang. Invisible backdoor attacks on deep neural networks via steganography and regularization. *IEEE Transactions on Dependable and Secure Computing*, 18(5):2088–2105, 2020.

[17] Yuezun Li, Yiming Li, Baoyuan Wu, Longkang Li, Ran He, and Siwei Lyu. Invisible backdoor attack with sample-specific triggers. In *IEEE International Conference on Computer Vision*, pages 16463–16472, 2021.

[18] Tuan Anh Nguyen and Anh Tuan Tran. Wanet-imperceptible warping-based backdoor attack. In *International Conference on Learning Representations*, 2021.

[19] Yi Zeng, Won Park, Z Morley Mao, and Ruoxi Jia. Rethinking the backdoor attacks' triggers: A frequency perspective. In *IEEE International Conference on Computer Vision*, pages 16473–16481, 2021.

[20] Alexander Turner, Dimitris Tsipras, and Aleksander Madry. Label-consistent backdoor attacks. *arXiv preprint arXiv:1912.02771*, 2019.

[21] Mauro Barni, Kassem Kallas, and Benedetta Tondi. A new backdoor attack in cnns by training set corruption without label poisoning. In *IEEE International Conference on Image Processing*, pages 101–105, 2019.

[22] Yi Zeng, Minzhou Pan, Hoang Anh Just, Lingjuan Lyu, Meikang Qiu, and Ruoxi Jia. NARCISSUS: A practical clean-label backdoor attack with limited information. *arXiv preprint arXiv:2204.05255*, 2022.

[23] Aniruddha Saha, Akshayvarun Subramanya, and Hamed Pirsiavash. Hidden trigger backdoor attacks. In *AAAI Conference on Artificial Intelligence*, pages 11957–11965, 2020.

[24] Brandon Tran, Jerry Li, and Aleksander Madry. Spectral signatures in backdoor attacks. In *Advances in Neural Information Processing Systems*, 2018.

[25] Jonathan Hayase and Weihao Kong. SPECTRE: Defending against backdoor attacks using robust covariance estimation. In *International Conference on Machine Learning*, 2020.

[26] Bryant Chen, Wilka Carvalho, Nathalie Baracaldo, Heiko Ludwig, Benjamin Edwards, Taesung Lee, Ian Molloy, and Biplav Srivastava. Detecting backdoor attacks on deep neural networks by activation clustering. *arXiv preprint arXiv:1811.03728*, 2018.

[27] Yansong Gao, Change Xu, Derui Wang, Shiping Chen, Damith C Ranasinghe, and Surya Nepal. STRIP: A defence against trojan attacks on deep neural networks. In *Annual Computer Security Applications Conference*, pages 113–125, 2019.

[28] Pang Wei Koh and Percy Liang. Understanding black-box predictions via influence functions. In *International Conference on Machine Learning*, pages 1885–1894, 2017.

[29] Jiyang Guan, Zhuozhuo Tu, Ran He, and Dacheng Tao. Few-shot backdoor defense using shapley estimation. In *IEEE Conference on Computer Vision and Pattern Recognition*, 2022.

[30] Min Du, Ruoxi Jia, and Dawn Song. Robust anomaly detection and backdoor attack detection via differential privacy. In *International Conference on Learning Representations*, 2020.

[31] Eitan Borgnia, Valeriia Cherepanova, Liam Fowl, Amin Ghiasi, Jonas Geiping, Micah Goldblum, Tom Goldstein, and Arjun Gupta. Strong data augmentation sanitizes poisoning and backdoor attacks without an accuracy tradeoff. In *IEEE International Conference on Acoustics, Speech and Signal Processing*, pages 3855–3859, 2021.

[32] Kunzhe Huang, Yiming Li, Baoyuan Wu, Zhan Qin, and Kui Ren. Backdoor defense via decoupling the training process. In *International Conference on Learning Representations*, 2022.

[33] Cynthia Dwork. Differential privacy: A survey of results. In *International Conference on Theory and Applications of Models of Computation*, pages 1–19, 2008.

[34] Hongyi Zhang, Moustapha Cisse, Yann N Dauphin, and David Lopez-Paz. MixUp: Beyond empirical risk minimization. In *International Conference on Learning Representations*, 2018.

[35] Chengyue Gong, Tongzheng Ren, Mao Ye, and Qiang Liu. MaxUp: Lightweight adversarial training with data augmentation improves neural network training. In *IEEE Conference on Computer Vision and Pattern Recognition*, pages 2474–2483, 2021.

[36] Christian Szegedy, Wojciech Zaremba, Ilya Sutskever, Joan Bruna, Dumitru Erhan, Ian Goodfellow, and Rob Fergus. Intriguing properties of neural networks. In *International Conference on Learning Representations*, 2013.

[37] Aleksander Madry, Aleksandar Makelov, Ludwig Schmidt, Dimitris Tsipras, and Adrian Vladu. Towards deep learning models resistant to adversarial attacks. In *International Conference on Learning Representations*, 2018.

[38] Jonas Geiping, Liam Fowl, Gowthami Somepalli, Micah Goldblum, Michael Moeller, and Tom Goldstein. What doesn't kill you makes you robust (er): Adversarial training against poisons and backdoors. *arXiv preprint arXiv:2102.13624*, 2021.

[39] Naren Manoj and Avrim Blum. Excess capacity and backdoor poisoning. In *Advances in Neural Information Processing Systems*, 2021.

[40] Bolun Wang, Yuanshun Yao, Shawn Shan, Huiying Li, Bimal Viswanath, Haitao Zheng, and Ben Y Zhao. Neural cleanse: Identifying and mitigating backdoor attacks in neural networks. In *IEEE Symposium on Security and Privacy*, pages 707–723, 2019.

[41] Huili Chen, Cheng Fu, Jishen Zhao, and Farinaz Koushanfar. DeepInspect: A black-box trojan detection and mitigation framework for deep neural networks. In *International Joint Conference on Artificial Intelligence*, pages 4658–4664, 2019.

[42] Wenbo Guo, Lun Wang, Xinyu Xing, Min Du, and Dawn Song. Tabor: A highly accurate approach to inspecting and restoring trojan backdoors in ai systems. *arXiv preprint arXiv:1908.01763*, 2019.

[43] Guanhong Tao, Guangyu Shen, Yingqi Liu, Shengwei An, Qiuling Xu, Shiqing Ma, Pan Li, and Xiangyu Zhang. Better trigger inversion optimization in backdoor scanning. In *IEEE Conference on Computer Vision and Pattern Recognition*, 2022.

[44] Xiaojun Xu, Qi Wang, Huichen Li, Nikita Borisov, Carl A Gunter, and Bo Li. Detecting AI trojans using meta neural analysis. In *IEEE Symposium on Security and Privacy*, pages 103–120, 2021.

[45] Yinpeng Dong, Xiao Yang, Zhijie Deng, Tianyu Pang, Zihao Xiao, Hang Su, and Jun Zhu. Black-box detection of backdoor attacks with limited information and data. In *IEEE International Conference on Computer Vision*, pages 16482–16491, 2021.

[46] Junfeng Guo, Ang Li, and Cong Liu. AEVA: Black-box backdoor detection using adversarial extreme value analysis. In *International Conference on Learning Representations*, 2021.

[47] Xiaoling Hu, Xiao Lin, Michael Cogswell, Yi Yao, Susmit Jha, and Chao Chen. Trigger hunting with a topological prior for trojan detection. In *International Conference on Learning Representations*, 2022.

[48] Tianlong Chen, Zhenyu Zhang, Yihua Zhang, Shiyu Chang, Sijia Liu, and Zhangyang Wang. Quarantine: Sparsity can uncover the trojan attack trigger for free. In *IEEE Conference on Computer Vision and Pattern Recognition*, pages 598–609, 2022.

[49] Justin Johnson, Alexandre Alahi, and Li Fei-Fei. Perceptual losses for real-time style transfer and super-resolution. In *European Conference on Computer Vision*, pages 694–711, 2016.

[50] Hussein A Aly and Eric Dubois. Image up-sampling using total-variation regularization with a new observation model. *IEEE Transactions on Image Processing*, 14(10):1647–1659, 2005.

[51] Nitish Srivastava, Geoffrey Hinton, Alex Krizhevsky, Ilya Sutskever, and Ruslan Salakhutdinov. Dropout: A simple way to prevent neural networks from overfitting. *Journal of Machine Learning Research*, 15(1):1929–1958, 2014.

[52] Christian Szegedy, Vincent Vanhoucke, Sergey Ioffe, Jon Shlens, and Zbigniew Wojna. Rethinking the inception architecture for computer vision. In *IEEE Conference on Computer Vision and Pattern Recognition*, pages 2818–2826, 2016.

[53] Alex Krizhevsky. Learning multiple layers of features from tiny images. Master's thesis, University of Toronto, 2009.

[54] Sebastian Houben, Johannes Stallkamp, Jan Salmen, Marc Schlipsing, and Christian Igel. Detection of traffic signs in real-world images: The German Traffic Sign Detection Benchmark. In *International Joint Conference on Neural Networks*, 2013.

[55] Jia Deng, Wei Dong, Richard Socher, Li-Jia Li, Kai Li, and Li Fei-Fei. ImageNet: A large-scale hierarchical image database. In *IEEE Conference on Computer Vision and Pattern Recognition*, pages 248–255, 2009.

[56] Sergey Zagoruyko and Nikos Komodakis. Wide residual networks. In *British Machine Vision Conference*, pages 87.1–87.12, 2016.

[57] Kaiming He, Xiangyu Zhang, Shaoqing Ren, and Jian Sun. Deep residual learning for image recognition. In *IEEE Conference on Computer Vision and Pattern Recognition*, pages 770–778, 2016.

[58] Siddhant Garg, Adarsh Kumar, Vibhor Goel, and Yingyu Liang. Can adversarial weight perturbations inject neural backdoors. In *ACM International Conference on Information & Knowledge Management*, pages 2029–2032, 2020.

[59] Zhiyuan Zhang, Lingjuan Lyu, Weiqiang Wang, Lichao Sun, and Xu Sun. How to inject backdoors with better consistency: Logit anchoring on clean data. In *International Conference on Learning Representations*, 2022.

[60] Jakub Breier, Xiaolu Hou, Dirmanto Jap, Lei Ma, Shivam Bhasin, and Yang Liu. Practical fault attack on deep neural networks. In *ACM SIGSAC Conference on Computer and Communications Security*, pages 2204–2206, 2018.

[61] Jiawang Bai, Baoyuan Wu, Yong Zhang, Yiming Li, Zhifeng Li, and Shu-Tao Xia. Targeted attack against deep neural networks via flipping limited weight bits. In *International Conference on Learning Representations*, 2021.

[62] Xiangyu Qi, Tinghao Xie, Ruizhe Pan, Jifeng Zhu, Yong Yang, and Kai Bu. Towards practical deployment-stage backdoor attack on deep neural networks. In *IEEE Conference on Computer Vision and Pattern Recognition*, 2022.

Checklist

1. For all authors...
   (a) Do the main claims made in the abstract and introduction accurately reflect the paper's contributions and scope? [Yes]
   (b) Did you describe the limitations of your work? [Yes] Please see Section 5
   (c) Did you discuss any potential negative societal impacts of your work? [No] We do not see significant potential negative societal impacts of this work.
   (d) Have you read the ethics review guidelines and ensured that your paper conforms to them? [Yes]
2. If you are including theoretical results...
   (a) Did you state the full set of assumptions of all theoretical results? [N/A]
   (b) Did you include complete proofs of all theoretical results? [N/A]
3. If you ran experiments...
   (a) Did you include the code, data, and instructions needed to reproduce the main experimental results (either in the supplemental material or as a URL)? [No] All codes and pre-trained models will be released after acceptance.
   (b) Did you specify all the training details (e.g., data splits, hyperparameters, how they were chosen)? [Yes] Please see Section 4.1 and Appendix B.
   (c) Did you report error bars (e.g., with respect to the random seed after running experiments multiple times)? [Yes] Please see Table 4.
   (d) Did you include the total amount of compute and the type of resources used (e.g., type of GPUs, internal cluster, or cloud provider)? [Yes] Please see Appendix B.
4. If you are using existing assets (e.g., code, data, models) or curating/releasing new assets...
   (a) If your work uses existing assets, did you cite the creators? [Yes] All datasets we used are public and cited properly.
   (b) Did you mention the license of the assets? [Yes] All datasets we used are public and cited properly.
   (c) Did you include any new assets either in the supplemental material or as a URL? [No]
   (d) Did you discuss whether and how consent was obtained from people whose data you're using/curating? [Yes] All datasets we used are public and cited properly.
   (e) Did you discuss whether the data you are using/curating contains personally identifiable information or offensive content? [N/A] We only use public image classification datasets.
5. If you used crowdsourcing or conducted research with human subjects...
   (a) Did you include the full text of instructions given to participants and screenshots, if applicable? [N/A]
   (b) Did you describe any potential participant risks, with links to Institutional Review Board (IRB) approvals, if applicable? [N/A]
   (c) Did you include the estimated hourly wage paid to participants and the total amount spent on participant compensation? [N/A]

A More related works

In this section, we discuss more related works in addition to those in Section 2.

Recently, self-supervised learning has also been shown to be vulnerable to backdoor attacks [9, 10]. Yan *et al.* [7] and Carlini [8] successfully designed backdoor attacks against semi-supervised learning. It has been shown that backdoored models can be obtained in the near vicinity of clean models, making it harder to detect backdoored models from clean models [58, 59]. Another line of research studies on deployment-stage backdoor attacks [60, 61, 62], which inject backdoors into pre-trained models by perturbing the weights, instead of training them on backdoor samples as in traditional training-stage backdoor attacks [1, 6]. In this work, we focus on defending training-stage backdoor attacks.

B More implementation details

In this section, we provide more details on our experimental settings, in addition to those in Section 4.1.

B.1 Backdoor attack details

For BadNet-Grid, Trojan-SQ, and SIG, we use the triggers provided in the official codes of [12][4]. For LCBA attack, we use the official poisoned dataset provided in the codes of the original paper[5]. For other attacks, we use the backdoor triggers provided in the official codes of [5][6]. The visualization of all 10 attacks are shown in Figure 3. Following [12], we set the target class to 0 on CIFAR10 and ImageNet-12, and 1 on GTSRB; we use all-to-one attack mode for all dirty-label attacks, where a portion of training samples from non-target classes are poisoned towards the target class; the poisoning ratio α is set to 10% by default.

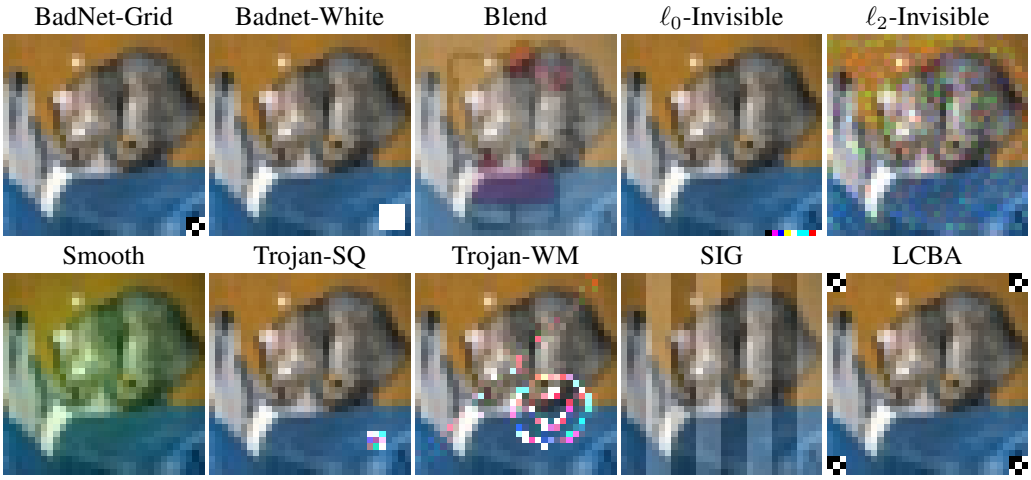

Figure 3: Visualization of different attacks on CIFAR10. The poisoned images are shown below the name of each attack.

B.2 Backdoor defense details

For all defense methods, we use the same model structures and backdoor attack settings as described in Section 4.1 and Appendix B.1. Below we describe other detailed settings of each defense method.

Normal training (i.e., "No defense") On CIFAR10 and GTSRB, we train for 200 epochs using Adam optimizer with initial learning rate 1×10^{-3}, cosine annealing learning rate scheduler, weight

[4] https://github.com/bboylyg/ABL

[5] https://github.com/MadryLab/label-consistent-backdoor-code

[6] https://github.com/YiZeng623/I-BAU

decay 5×10^{-4}, and batch size 256. On ImageNet-12, we train for 90 epochs using SGD optimizer with initial learning rate 0.1, cosine annealing learning rate scheduler, weight decay 5×10^{-4}, and batch size 256.

Our method In stage 1, we set the loss trade-off parameters $\lambda_1 = 10$ and $\lambda_2 = 0.1$. Other hyper-parameters in stage 1 (e.g., learning rate, batch size, etc.) are set identical to those used in normal training. In stage 2, we use the same hyper-parameters as in stage 1, except that we set the batch size to 32 on CIFAR10 and GTSRB due to the small size of holdout set $\mathcal{D}_{\mathrm{h}}$.

I-BAU The original I-BAU paper conducted experiments on a relatively small convolutional network. We empirically find the default hyper-parameters in their original paper do not lead to satisfying performance on WRN16-1, which is a more widely used model structure in backdoor defense papers [4, 12]. We turn the inner and outer learning rates of I-BAU, which are the two most important hyper-parameters, in $\{0.1, 1, 2, 5, 10\}$ and $\{1 \times 10^{-5}, 1 \times 10^{-4}, 1 \times 10^{-3}\}$, respectively. On both datasets, the best overall performance is achieved at 1 inner learning rate and 1×10^{-4} outer learning rate, which we use to report the results of I-BAU.

ANP Following the suggestion in the original paper [11], we tune the trade-off hyper-parameter between the natural and robustness loss in ANP on the discrete set $\{0.1, 0.2, 0.4, 0.5, 0.6\}$. The best overall performance is achieved at 0.2 on CIFAR10 and 0.1 on GTSRB.

DP The original paper using DP for backdoor defense [30] conducted experiments on the simple MNIST dataset with a tiny three-layer convolutional neural network. Following [30, 5], we tune the noise multiplier in range $[0.5, 10]$ to achieve overall effectiveness across different attacks, and we keep the gradient clipping threshold to 1. In consistency with the results reported in [5], even with careful hyper-parameter tuning, DP fails to achieve satisfying results on datasets as complex as CIFAR10 and GTSRB.

NAD and ABL Since our paper uses the same model structures with these two methods, we directly use the best hyper-parameters reported in their original papers for fair comparison.

B.3 Hardware resources

All experiments are conducted on one NVIDIA RTX A6000 GPU.

C More experimental results

In this section, we provide more experimental results in addition to those in Section 4.

C.1 Potential adaptive attack

In this section, we investigate the performance of our method under adaptive backdoor attacks that are intentionally designed to by-pass T&R. This is a more challenging setting for defenders, where the attacker is aware of the applied defense strategy and able to take countermoves. Since the core mechanism of T&R is to trap backdoor within the classification head and keep the stem network relatively clean, a potential adaptive attack is to intentionally inject backdoors into the stem network (i.e., the shallow or middle layers in the entire network).

Luckily, a previous work [13] has already designed an attack, named Latent Backdoor Attack (LBA), which serves the exact purpose. LBA is originally proposed to encode backdoor into hidden layers instead of output layers, so that the backdoor can survive transfer learning. It can also serve as the adaptive attack to our method. We try different settings denoted as LBA-n: LBA backdoor is injected to all layers before the n-th layer. For example, LBA-14 injects backdoor to the input of the last fully connected layer. As shown in Table 7, when equipped with the auxiliary image reconstruction task, our method can successfully defend LBA.

Table 7: Results of our method against the adaptive attack LBA-n on CIFAR10.

Auxiliary image reconstruction task	Replace classification head	LBA-14		LBA-12		LBA-10	
		ASR	**CA**	**ASR**	**CA**	**ASR**	**CA**
✗	✓	93.64	82.06	90.62	84.12	84.65	83.49
✓	✓	4.32	84.52	4.56	84.67	0.68	85.43

C.2 Ablation study on hyper-parameters

In this section, we show the performance of our method under different values of the hyper-parameters λ_1 and λ_2 in Eq. (1). Specifically, we first fix $\lambda_2 = 0.1$ and change λ_1 values, and then fix $\lambda_1 = 10$ and change λ_2 values. The results are shown in Table 8. As we can see, the ASR drops as the value of λ_1 increases from 0 to 10. This shows the effectiveness of our auxiliary image reconstruction task in defending against backdoor attack. As λ_1 goes beyond 10, the performance gain on ASR saturates, while the clean accuracy (CA) decreases. This is because too strong auxiliary loss on image reconstruction can bias the stem network towards learning image reconstruction features while ignoring the classification features. On the other hand, using a small but non-zero λ_2 also leads to better ASR than setting $\lambda_2 = 0$. This indicates that the total variation regularization can potentially prevent the stem network from learning some high-frequency features which commonly exist in backdoor samples [19], and thus helps defend backdoor attacks.

Alongside ASR and CA, we also show the mean square error (MSE) of the image reconstruction. Smaller MSE roughly indicates better image reconstruction quality. We also visualize image reconstruction results in Figure 4. As we can see, larger λ_1 values lead to better image reconstruction results.

Table 8: Ablation study on the hyper-parameters λ_1 and λ_2. Reported are results on CIFAR10 with ℓ_2-Invisible attack.

	λ_1				λ_2		
	0	1	10	20	0	0.1	1
ASR	99.99	53.77	0.74	1.04	3.32	0.74	0.28
CA	85.08	83.70	84.01	81.37	82.46	84.01	83.51
MSE	-	0.0145	0.0085	0.0071	0.0097	0.0085	0.0091

C.3 Ablation study on the size of clean holdout set

In this section, we show the performance of our method under different number of available clean training data (i.e., the size of the clean holdout set $\mathcal{D}_\mathrm{h}$) in stage 2. Specifically, we use two different settings with $|\mathcal{D}_\mathrm{h}| = 1250$ and $|\mathcal{D}_\mathrm{h}| = 2500$ (i.e., 2.5% and 5% of the entire CIFAR10 training set, respectively). As shown in Table 9, our method can still success with even 2.5% clean training images available.

Table 9: Ablation study on the size of clean holdout set $\mathcal{D}_\mathrm{h}$. Reported are results on CIFAR10 with ℓ_2-Invisible attack. $|\mathcal{D}_\mathrm{h}| = 2500$ (i.e., 5% of the entire training set) is the default setting used in our main experiments.

$\lvert\mathcal{D}_\mathrm{h}\rvert$	250	500	1250	2500
ASR	0.77	0.56	0.41	0.74
CA	72.00	76.99	83.31	84.01

C.4 Results on non-poisoned datasets

The main purpose of the backdoor defense methods is to achieve good performance on poisoned training sets. However, in some practical situations, the model trainer might not know whether the training set is poisoned or not. A good solution for these situations is to first use backdoor detection

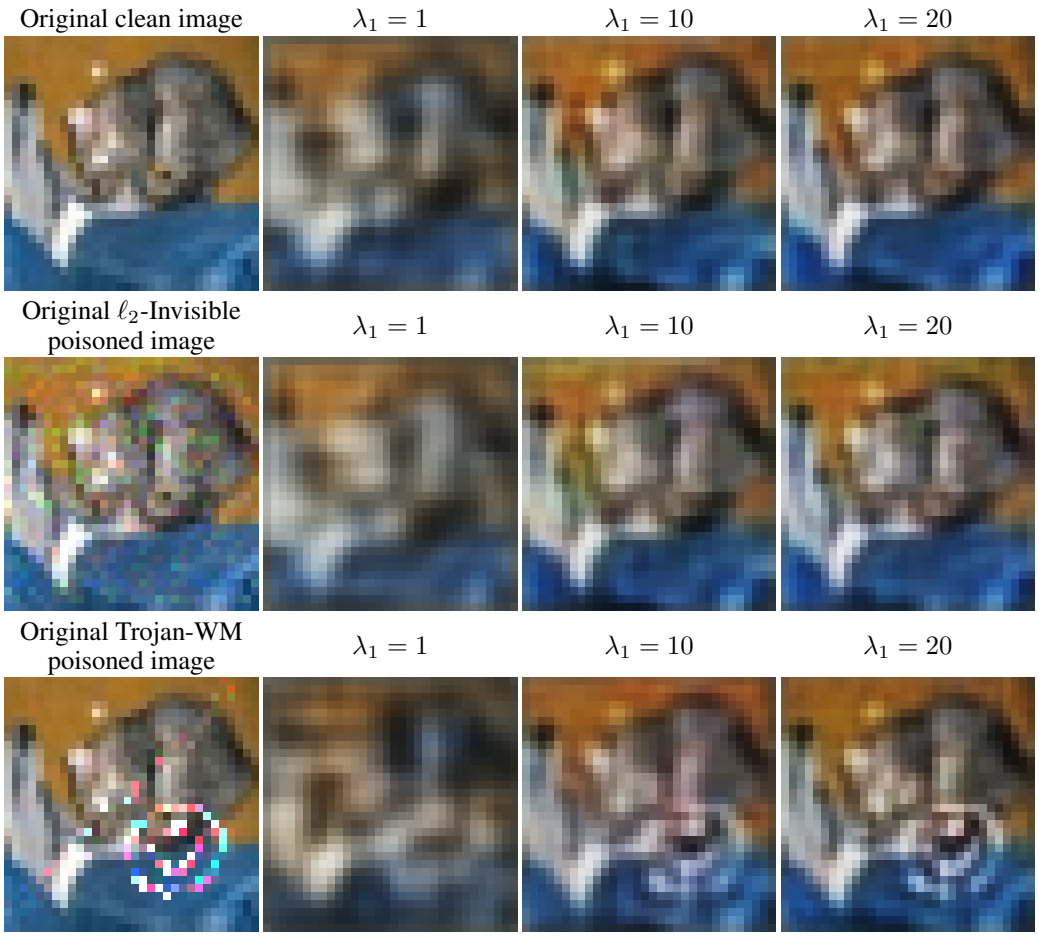

Figure 4: Qualitative results for image reconstruction in our T&R method on CIFAR10. The first row: The original clean image and its reconstructed versions under different λ_1 values. The second row: The original ℓ_2-Invisible poisoned image and its reconstructed versions under different λ_1 values. The third row: The original Trojan-WM poisoned image and its reconstructed versions under different λ_1 values.

methods [44, 45, 46, 47] which can indirectly tell whether the training set is poisoned[7], and then decide whether it is necessary to apply backdoor defense methods. With that said, for completeness of the experiments, we show how the defense methods perform on clean training sets (i.e., datasets with poison ratio $\alpha = 0$).

We compare our method with the two strongest baselines, ABL and I-BAU, on the clean CIFAR10 training set without any backdoor attacks. The results are shown in Table 10. As we can see, compared with normal training, both I-BAU and our method can keep acceptable CA when trained on clean dataset. In contrast, ABL suffers considerable performance drop.

Although the original ABL paper reported no significant CA drop when ABL is applied on clean training sets [12], we believe this is because the authors of [12] used different hyper-parameter settings for ABL on clean and poisoned datasets. The results reported in Table 10 are obtained using the default hyper-parameters provided in the original ABL paper (i.e., the ones for best performance on poisoned datasets). Since we are assuming the defender has no prior knowledge on whether the dataset is poisoned or not, it is more reasonable to use the same hyper-parameters for both situations. In fact, it is quite intuitive to explain why ABL brings performance drop on clean training set. ABL selects a portion of training samples that is determined as potential backdoor training samples, and

[7] If a model trained from scratch on the dataset is detected as poisoned, then the training set is likely to be poisoned. Otherwise, it is likely to be clean.

then unlearns those selected samples. If there is no backdoor samples in the training set, then the selected samples are all clean ones, and unlearning on them will hurt clean accuracy.

Table 10: Clean accuracy (CA) of different defense methods on clean CIFAR10 training set without backdoor attacks. Note that it is not reasonable to compare the ASR here, since no backdoor is inserted into the model when the training set is clean.

Normal training	ABL	I-BAU	Ours
89.81	72.72	85.44	83.87

C.5 Results of DP

Due to the space limit of the main text, we report the results of DP [30], which achieves the least competitive performance among the compared defense methods, in this section. As shown in Table 11 and Table 12, our method largely outperforms DP.

Table 11: Results of DP on CIFAR10.

	DP		Ours	
Attack method	**ASR**	**CA**	**ASR**	**CA**
BadNet-Grid	53.21	27.73	1.21	84.42
BadNet-White	42.92	26.52	3.14	83.96
Blend	86.68	26.52	10.59	83.82
ℓ_0-Invisible	35.90	25.00	2.91	84.04
ℓ_2-Invisible	60.90	20.76	0.74	84.01
Smooth	95.41	28.18	4.23	83.63
Trojan-SQ	43.57	25.69	6.54	79.92
Trojan-WM	99.62	23.00	12.66	79.97
SIG	97.02	28.73	0.02	82.97
LCBA	82.80	18.95	5.41	82.57
Average	69.80	25.11	4.75	82.93

Table 12: Results of DP on GTSRB.

	DP		Ours	
Attack method	**ASR**	**CA**	**ASR**	**CA**
BadNet-Grid	67.84	14.02	0.20	95.94
BadNet-White	52.20	16.14	0.01	95.74
Blend	83.26	12.87	1.98	95.62
ℓ_0-Invisible	84.68	13.44	1.32	95.87
ℓ_2-Invisible	82.49	16.94	0.03	96.10
Smooth	96.11	15.27	0.11	96.12
Trojan SQ	61.66	13.20	1.47	95.17
Trojan WM	99.11	13.19	7.06	91.95
SIG	94.71	18.92	0.54	94.56
Average	80.23	14.89	1.41	95.23

D Difference in application scenario with previous works

Our method has less flexible application scenario compared with previous backdoor defense methods. Specifically, there are three common scenarios for backdoor defense:

Scenario 1: The defender gets a pretrained model from an untrusted source (e.g., the Internet), which is potentially backdoored. The defender has a small clean holdout set to sanitize the backdoored model, but don't have access to the original poisoned dataset.

Scenario 2: The defender collects raw data from an untrusted source (e.g., uploaded by untrusted users or from the Internet), and then trains the model on her own using the collected dataset, which potentially contains backdoor samples. The defender has a small clean holdout set to sanitize the backdoored model, as in Scenario 1.

Scenario 3: The defender collects raw data from an untrusted source (e.g., uploaded by untrusted users or from the Internet), and then trains the model on her own using the collected dataset, which potentially contains backdoor samples. The defender does not have a small clean holdout set to sanitize the backdoored model. This is a harder version than Scenario 2, since it doesn't require the defender to have a small clean holdout set.

Previous methods FP [3], NAD [4], I-BAU [5] are applicable in Scenario 1 and 2. Previous methods ABL [12] and DP [30] are applicable in Scenario 2 and 3. Our method is applicable only in Scenario 2. In Scenario 2, where all methods are applicable, our method achieves the best performance, outperforming previous methods by a considerable margin.

Scenario 2 is very common in the real world, compared with Scenario 1: In many cases, the defenders would train the model on their own, instead of directly using the (potentially backdoored) models released by a third-party. For example, the defender may use a model with some specific model size or architecture adapted for their hardware (e.g., mobile devices) with unique requirements, which will not be met by the third-party model. Or maybe the defender has a large amount of (potentially poisoned) internal data, which can lead to better performance than the third-party models trained on a dataset which is smaller and has distributional shifts. Or maybe the defender has its own advanced techniques to train a model for the specific task, which can lead to better performance than the general training techniques available to the third-party model trainer.

Scenario 2 does have one more requirement than scenario 3: It requires a small clean holdout set. We think this is reasonable, since previous methods [3, 4, 5] also have this requirement (in both scenario 1 and 2). In practice, to make sure the model achieves good performance before its deployment, the defender usually need to collect some clean samples for evaluation purpose. A small clean holdout set can be separated from the clean validation set.