MOUSE LOCKBOX DATASET: BEHAVIOR RECOGNITION OF MICE SOLVING MECHANICAL PUZZLES

Anonymous authors
Paper under double-blind review

ABSTRACT

Machine learning and computer vision have a major impact on the study of natural animal behavior, as they enable automated action classification of large bodies of videos. Mice are the standard mammalian model system in many fields of research, but the open datasets that are currently available to refine machine learning methods mostly focus on either simple or social behaviors. In this work, we present a large video dataset of individual mice solving complex mechanical puzzles, so-called lockboxes. The dataset consists of a total of well over 110 hours of animal behavior, recorded with three cameras from different perspectives. As a benchmark for frame-level action classification methods, we provide human-annotated labels for all videos of two different mice, that equal 13% of our dataset. The used keypoint (pose) tracking-based action classification framework illustrates the challenges of automated labeling of fine-grained behaviors, such as the manipulation of objects. We hope that our work will help accelerate the advancement of automated action and behavior classification in the computational neuroscience community. An anonymized preview of our dataset is available for the reviewers of this manuscript at `https://www.dropbox.com/scl/fo/h7nkai8574h23qfq9m1b2/AP4gNZOpDJJ7z0yGtbWQiOc?rlkey=w36jzxqjkghg0j0xva5zsxy2v&st=5r9msqjw&dl=0`

1 INTRODUCTION

Ethology, the study of non-human behavior, (Tinbergen, 1961) is arguably one of the founding stones to studying both (artificial) intelligence and cognition (Brock, 2024). By studying how animals interact with their environment and other animals, scientists gain insights into the cognitive abilities of different species and different aspects of intelligence, such as (social) learning, tool use, and memory. Ethology also influenced other, seemingly distant fields of research like agriculture (Tu et al., 2024), pharmacology (Kršiak, 1991) and robotics (Arkin et al., 2003; Miklósi et al., 2017).

In the traditional approach to ethology, human raters annotate video data according to predefined ethograms. These ethograms consist of the explicit descriptions of the behaviors of interest, that have been specified by human experts. This process is slow (Button et al., 2013), imprecise and subjective (Levitis et al., 2009), low-dimensional (Ano, 2007), limited by human perception and language, and dull which makes it prone to errors due to a decreasing attentiveness of the human raters. The rising field of computational ethology (Anderson & Perona, 2014) addresses these challenges by shifting from manual and towards semi-/automatic behavior annotation. It merges ethology with computer vision and machine learning, aiming to describe behavior to its full extent while also rendering human raters largely obsolete.

Anderson & Perona (2014) describe the generic computational ethology setup as a three-parted pipeline: animal tracking, i.e., localization of keypoints (poses) of individual animals and tracking them over time; action classification, i.e., identification of time intervals when relevant action patterns are performed; and behavior analysis, i.e., estimating behavioral patterns assembled from sequences of actions.

Action classification and the estimation of behavioral patterns are clearly the most important steps for understanding behavior. Once a video has been processed into a sequence of interpretable discrete actions, researchers can analyze whether an animal has "understood" a task and follows a

policy that advances it towards a goal. Scientists can also study learning by focusing on changes of these policies or by trying to infer their goals, e.g., by the means of inverse reinforcement learning.

Unfortunately, action classification is nontrivial and pose tracking is often one of its bottlenecks. Here, keypoint-based approaches are currently the undisputed state-of-the-art, partially due to availability of tools (Nath et al., 2019; Luxem et al., 2022; Pereira et al., 2022; Russello et al., 2022) and the visually intuitive nature of this form of representation (Brattoli et al., 2021). However, this type of data has a number of specific challenges. First of all, poses are low-dimensional as they only comprise location information (Batty et al., 2019; Brattoli et al., 2021) and ignore further, possibly highly descriptive visual information (McCullough & Goodhill, 2021; Jia et al., 2022). Second, jitter in keypoint locations has been a known problem for quite some time now (Weinreb et al., 2024). It interferes with the mapping of 2-dimensional keypoint locations from different perspectives into a common 3-dimensional coordinate system, as the location errors propagate. Third, humans decide which exact keypoints are tracked, often at a time when actions and behaviors that turn out to be of interest are still unknown. This introduces a risk of confirming prior assumptions (Batty et al., 2019; Brattoli et al., 2021; Jia et al., 2022; Kuo et al., 2022). And lastly, the amount of available data is growing ever larger, which renders dense human annotation increasingly impractical (Blau et al., 2024). It is therefore critical to develop approaches that perform well with sparsely labeled data.

Human raters, in contrast to the state-of-the-art computational approaches, arguably do not rely on the exact localization of keypoints for most behavior classification tasks but use other visual features, such as postural or textural patterns. Representation learning approaches that do not rely on keypoints are therefore an important avenue to pursue (McCullough & Goodhill, 2021) for the consistent, accurate, and unbiased quantification and modeling of behavior in computational neuro-/ethology (Datta et al., 2019).

The development of machine learning for computational ethology critically relies on the availability of behavioral datasets. At this time, a diverse set of standardized datasets (Burgos-Artizzu et al., 2012; Dunn et al., 2021; Pedersen et al., 2020; Eyjolfsdottir et al., 2021; Marshall et al., 2021; Segalin et al., 2021; Sun et al., 2021a; Ng et al., 2022; Hu et al., 2023; Ma et al., 2023; Rogers et al., 2023; Zia et al., 2023; Brookes et al., 2024; Duporge et al., 2024; Kholiavchenko et al., 2024; Li et al., 2024) are publicly available, but almost all focus on either rather simple or on social behaviors. Although complex problem solving in animals is of central interest to neuro-/ethology, there is currently a lack of large-scale non-human single-agent video datasets that focus on non-social and complex intelligent behaviors, and allow to refine the required computational methods.

In this work, we aim to close this gap by providing a labeled, single-agent, multi-perspective video dataset of mice showing intelligent behavior as they learn to solve mechanical puzzles, so-called lockboxes. Every lockbox consists of single or a combination of four different mechanisms and is baited with a food reward. Once a mouse succeeds to open a lockbox, it gains access to the food reward. We also report a human-machine against human-human performance comparison for action classification using a state-of-the-art keypoint-based approach (Boon et al., 2024). To provide a benchmark for novel representation learning methods, we provide labels for 13% of the video data, including mechanism state, mouse-to-mechanism proximity, and both mouse-mechanism and mouse-reward actions. This amounts to about 15 hours and 25 minutes, i.e., more than 1.6 million frames. In doing so, we increase the longest total video playtime, i.e., the number of perspectives multiplied by the real time recorded, available through any dataset showing mice from 88 hours (Burgos-Artizzu et al., 2012) before by more than 33% to now 117 hours and 52 minutes.

We hope that our dataset will serve three purposes. First, we hope that it will foster the development and adoption of more diverse machine learning approaches in computational neuro-/ethology. Second, it may provide interesting challenges to the representation learning community, because behavioral action classification require both large-scale pose and fine-level visual information, e.g., the position of mouth and teeth. And third, we hope that a broader analysis of the dataset by the research community will advance our understanding into how mice learn to solve complex problems.

2 Related Work

The general three-parted structure of automated behavioral analysis—tracking, action classification, and behavioral pattern estimation—(Anderson & Perona, 2014) largely persists in state-of-the-art

Table 1: Overview of some distinguishing properties of available video datasets showing rodents. The listed durations, i.e., real time recorded and calculated total playtime, are rounded values. The 20 (intelligent) behaviors we report reflect the composition of five labeled interactions that the mice may perform on the four distinct lockbox mechanisms.

	CONTEXT	LABELS	# PERSPECTIVES × REAL TIME
CRIM13	Mice, social	13 (social) behaviors	2×44h $\approx$ 88h
Rat 7M	Rats, individual	20 keypoint markers	6×11h $\approx$ 65h
PAIR-R24M	Rats, social	14 (social) behaviors	$24 \times$ 9h $\approx$ 220h
MARS	Mice, social	3 social behaviors	2×14h $\approx$ 28h
CalMS21	Mice, social	3 social behaviors	1×70h $\approx$ 70h
Ours	Mice, individual	20 (intelligent) behaviors	3×40h $\approx$ 120h

approaches (Datta et al., 2019; Kuo et al., 2022; Luxem et al., 2023; Fazzari et al., 2024), albeit with increasingly advanced methods. It is still the most common approach to first detect animal poses (Mathis et al., 2018; Alameer et al., 2020; Dunn et al., 2021; Brattoli et al., 2021; Segalin et al., 2021; Pereira et al., 2022; Russello et al., 2022; Biderman et al., 2024) and further process them to trajectories (Alameer et al., 2020; Hsu & Yttri, 2021; Segalin et al., 2021; Sun et al., 2021b; Luxem et al., 2022; Biderman et al., 2024; Boon et al., 2024) or feature representations (Brattoli et al., 2021; Zhou et al., 2023), while only few of the available works (Batty et al., 2019; Bohnslav et al., 2021; Brattoli et al., 2021; Jia et al., 2022) shift towards encoding videos as abstract spatiotemporal features. Both pose trajectories (Alameer et al., 2020; Brattoli et al., 2021; Hsu & Yttri, 2021; Segalin et al., 2021; Sun et al., 2021b; Luxem et al., 2022; Biderman et al., 2024; Weinreb et al., 2024) as well as abstract spatiotemporal features (Batty et al., 2019; Bohnslav et al., 2021; Brattoli et al., 2021; Jia et al., 2022) then form the basis for the next analysis steps, the quantification of actions and behaviors.

To refine these methods, various video datasets are available to the community today. We limit the following overview to those that show rodents, because various rodent species can potentially be used in domain transfer settings, due to their largely similar visual appearance and motor apparatus. Table 1 summarizes some of their distinguishing properties discussed below. A full survey on (both video and image) datasets showing animals would substantially exceed the scope of this work.

Burgos-Artizzu et al. (2012) presented with CRIM13 the up to now largest dataset with a total of 88 hours (44 hours of recorded real time) of video data showing mice from two (top-down and side) perspectives in resident-intruder contexts. They provide 13 human-annotated (social) behavior labels—approach, attack, coitus, chase, circle, drink, eat, clean, human, sniff, up, walk, and other—for each of the 237 pairs of 10 minute long videos. For these labels, they report a 70% agreement among human raters while the method they propose reaches 61.2% human-machine agreement for behavior classification.

Dunn et al. (2021) presented Rat 7M, a dataset consisting of 65 hours (11 hours of recorded real time) worth of videos of rats with 20 markers pierced to their bodies. The rats were recorded using six cameras, and 12 motion capture cameras were used to record the markers' coordinates in space. Behavior labels are not provided. They report that the pose tracking approach they proposed is robust in domain transfer settings where the species of the tracked agent changes from rat to mouse.

Marshall et al. (2021) presented PAIR-R24M, a dataset consisting of 220 hours (9 hours of recorded real time) worth of videos of rats from 24 perspectives. They provide 14 human-annotated (social) behavior labels—amble, crouch, explore, head tilt, idle, investigate, locomotion, rear down, rear up, small movement, sniff, groom, as well as close to, explore, and chase—for the entire dataset. It is the most perspective-diverse, the largest by total playtime, but also the shortest by real time recorded.

Segalin et al. (2021) presented MARS, a dataset consisting of 28 hours (14 hours of recorded real time) worth of videos of mice from two (top-down and front) perspectives. They provide three

human-annotated social behavior labels—attack, investigation, and mount—for 3 hours (1.5 hours in real time) worth of video data in 10 videos. They do not only propose a method that reaches human-level performance in behavior classification but also a graphical user interface that will accelerate computer-aided research in neuroscience labs that do not employ machine learning experts.

Sun et al. (2021a) presented CalMS21, a 70 hour long video dataset showing pairs of mice from a top-down perspective. They provide three human-annotated social behavior labels—attack, investigate, and mount—for 10 hours worth of video data.

2.1 Benchmark Method

Since methods based on keypoint (pose) estimation and tracking are currently state-of-the-art, our benchmark experiments are based on the pose-tracking approach used by Boon et al. (2024). The method consists of 3 steps: the use of DeepLabCut (DLC) for 2-dimensional pose tracking, 3-dimensional reconstruction and the refinement of keypoint data using (Extended) Kalman filtering, and the detection of action labels. A high-level description of steps is given below.

First, 2-dimensional poses of the mice and lockbox mechanisms are extracted from the videos on a frame-level by learning DLC models under supervision. We learn one DLC model to locate keypoints of mice, and two that locate keypoints of lockbox mechanisms—one for the single-mechanism lockboxes, and one for the lockbox combining them—using default parameters (Mathis et al., 2018; Nath et al., 2019) (see Appendix A.2). Next, the scene is reconstructed by utilizing the known 3-dimensional locations of the lockbox mechanisms given by their CAD models. We linearly map the known 3-dimensional locations onto the corresponding triplets of 2-dimensional keypoints using the random sample consensus (RANSAC) algorithm and construct a triangulation matrix for each video. Each of these triangulation matrices is then used as an observation matrix for a(n) (Extended) Kalman filter to refine the observed triplet of 2-dimensional keypoints into a common 3-dimensional space. The head and the tail of the mouse are inferred using a skeletal model, while the keypoints of the mechanisms and the paws of the mouse are inferred as single keypoints. Finally, the interactions of the mice with the lockbox mechanisms are detected based on the 3-dimensional poses of the mouse and predefined bounding boxes spanned by the 3-dimensional keypoint locations. For the proximity labels, the snout of mouse is used to detect the actions: each frame in which the snout of the mouse is inside of a bounding box, the corresponding action label (e.g., proximity lever) is detected. Biting is detected using the mouth of the mouse, which location is computed from the rigid body model of the mouse head. And the touch labels are deteced using the locations of the front paws. Note that the bite and touch labels have different predefined bounding boxes than the proximity labels, as these actions have a finer level of granularity than proximity labels.

3 Dataset

In this section, we describe our dataset in detail. This includes a description of the mice, the arena as part of the home cage and schematics of the lockboxes that the mice are presented with, the camera setup, the schedule at which mice were presented with the lockboxes, the preprocessing of the recorded videos in order to refine them to a dataset suitable for computer vision and machine learning approaches, the annotation of behavior labels including our ethogram, statistics on videos and labels, benchmark results, and known limitations.

3.1 Data Collection and Preprocessing

To create this video dataset, 12 female C57BL/6J mice obtained from Charles River Laboratories (Sulzfeld, Germany) were recorded in a free-standing Makrolon type III cage, that was connected to another cage of the same type by a tube. The mice were housed in groups of 4 animals in a 12/12-hour light/dark cycle of artifical light. During the trials with the lockboxes that took place in light phases, only one animal at a time could enter the cage in which the lockboxes were presented. The cage was closed with a top grid that was partially removed (cutout) to allow for unobstructed view on the lockbox. Three Basler acA1920-40um cameras (LM25HC7 lens, f = 25mm, k = 1.4; Kowa, Nagoya, Japan) were setup to record the grayscale videos at a 1936×1216px resolution (the highest possible) with a 30fps frame rate. Additionally, we used two infrared lights (Synergy 21 IR-Strahler 60W, ALLNET GmbH Computersysteme, Germering, Germany) to illuminate the cage.

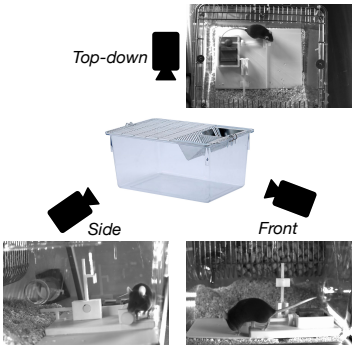

(a) Schematic of the camera setup including the perspective names.

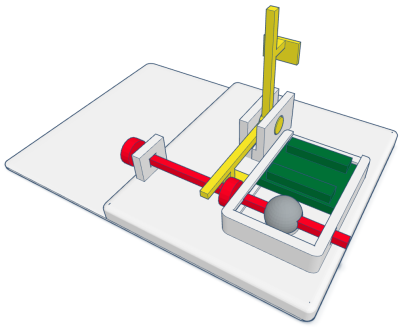

(b) Lockbox of combined mechanisms baited with a food reward underneath the sliding door.

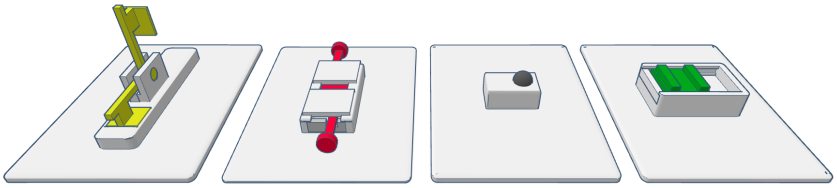

(c) Single-mechanism lockboxes baited with a food reward underneath each mechanisms.

Figure 1: Camera setup used for recording the videos, as well as lockboxes and their mechanisms: lever (yellow), stick (red), ball (gray), and sliding door (green). Each lockbox is baited with a food reward underneath the (last) mechanism. Appendix A.1 provides figures of the lockboxes with unlocked mechanisms.

The advantages of infrared lights were that they enhanced the quality of recordings captured by the infrared-sensitive cameras we used, while also not being aversive to the animals.

Figure 1a depicts the setup described before. All cameras were connected to a single computer and controlled by a common software program to synchronize frame capturing. The mice were presented with five different lockboxes: a combined lockbox consisting of four interlocked mechanisms (Figure 1b), and four simpler lockboxes presenting these mechanisms individually (Figure 1c). A hidden food reward (oatmeal flake) was used to bait the mice to solve the lockbox. It is important to note that the mice were not subjected to food or water deprivation. They had ad libitum access to food pellets (LASvendi, LAS QCDiet, Rod 16, autoclavable) and tap water. Therefore it can be assumed that they were not hungry when entering the arena. However, the food reward was exclusively provided within the lockboxes. To familiarize the mice with the food reward, they were habituated over three consecutive days prior to the start of lockbox training by placing eight oat flakes at the location where the lockbox would be introduced during the training sessions. The freely behaving mice were presented with the combined lockbox for at total of 6 and with the single-mechanism lockboxes 11 trials. In each trial, the mice were first exposed to the combined lockbox followed by a randomized order of single-mechanism lockboxes. The videos end shortly after the reward is reached, or if a trial reached the maximum duration of 30 minutes for combined and 15 minutes for single-mechanism lockboxes.

We manually cut the videos to remove disturbances, such as the experimenter's hands switching lockboxes. Any videos where the lockboxes could not be seen entirely were filtered out. This resulted in a dataset with a total playtime of 117 hours and 52 minutes.

3.2 Label Annotation

We provide human annotations of the mechanism state, mouse-to-mechanism proximity, and both mouse-mechanism and mouse-reward action labels. To do so while also preventing any kind of

Table 2: Ethogram used for label annotation.

LABEL	DEFINITION
Proximity	The mouse's snout is within a distance of 1cm to a specific mechanism.
Touch	The mouse touches a specific mechanism with one or both of its front paws.
Bite	The mouse bites into a specific mechanism.
Unlock	The state of a specific mechanism changes to unlocked. This may make the reward accessible or enabling the next mechanism to be unlocked. State changes may occur without the mouse manipulating a mechanism directly.
Lock	The state of a specific mechanism changes to locked. This may make the reward inaccessible or preventing the next mechanism from being unlocked. State changes may occur without the direct manipulation of a mechanism.
Reach reward	The mouse is in first contact with the reward with any of its body parts.

information leakage between labeled and unlabeled data splits, we labeled all videos of two specific mice (mouse numbers 291 and 324) that have a combined total playtime of about 15 hours and 25 minutes in 270 videos, i.e., more than 1.6 million frames in 90 trials. This equals about 13% of our dataset's total size.

Table 2 defines the ethogram we used to instruct our nine skilled human raters. Appendix A.3 provides example frames for the different labels. We used these labels that express trivial truths in order to minimize anthropomorphic biases, that would otherwise distort the evaluation of experiments and the conclusions drawn from their results. These biases are especially apparent when using more high-level labels, such as exploring and deliberately manipulating lockbox mechanisms, that strongly depend on subjective human interpretation. Using more explicit labels not only leads to higher label quality but also lowers the risk of computer vision and machine learning models learning said biases before reintroducing them as noise to any analysis based on their outputs.

For annotating the labels, we merged every video triplet (top-down, side, and front perspective) into a combined video.[1] All labels have been annotated by a random pair of raters with a temporal accuracy of ± 100 milliseconds, i.e., ± 3 frames using BORIS (Friard & Gamba, 2016). It took each of our raters about 6.2 to 11.5 times longer than the actual playtime to annotate the labels in a video. This matches with the factor of 5 to upmost 10 that is reported throughout the available literature. We account our slightly higher efforts to the multitude of mouse body parts and lockbox mechanisms that needed to be observed at the same time.

3.3 Dataset Statistics

In this section, we give an overview over various data statistics for both the labeled and unlabeled videos. It is worth mentioning that the unevenly distributed playtime shares of different mechanisms as well as active labels is rooted in the mice behaving freely in the arena. Their inherent preference for different actions and mechanisms is naturally occurring and reflected in the statistics we report.

3.3.1 Playtime Statistics

Our dataset has a total playtime of 117 hours and 52 minutes, i.e., almost 13 million frames, that show 39 hours and 17 minutes of real experimental time recorded from 3 perspectives. The dataset consists of a total of 1629 videos, i.e., 543 trials. Table 3 gives a detailed overview of the playtime shares for both mice and lockbox mechanisms. Figure 2 shows a histogram of videos playtimes. The videos in our dataset have a mean playtime of 4 minutes and 21 seconds.

[1]Merging the video triplets into combined videos was necessary as BORIS version 8.27 suffers from a software issue that occurs more frequently when using it with multiple videos opened at once, and that causes to the software to crash only minutes into using it. The published dataset does not include the merged videos.

Table 3: Playtime shares of both different mice and mechanisms in our dataset in percent. The column names identify the mice while the rows specify the mechanisms.

	52	**68**	**70**	**80**	**162**	**192**	**258**	**285**	**291**	**324**	**336**	**389**	$\sum$
Lever	1.0	1.9	0.8	1.8	2.0	0.7	2.3	0.3	1.4	1.0	0.4	0.6	14.2
Stick	0.9	1.1	1.2	1.0	1.1	0.5	0.7	0.4	0.9	0.5	0.5	1.4	10.1
Ball	0.6	0.8	0.6	0.9	2.3	1.4	0.5	0.4	0.8	0.3	0.8	0.4	9.7
Sl.Door	1.3	3.6	2.0	0.7	0.5	0.5	1.1	0.4	0.4	0.3	2.7	0.5	13.9
Comb.	3.2	7.6	4.9	3.6	3.1	4.6	3.9	3.8	2.4	5.2	6.0	3.9	52.0
$\sum$	6.9	15.1	9.4	7.9	9.0	7.7	8.5	5.3	5.8	7.3	10.3	6.7	**100**

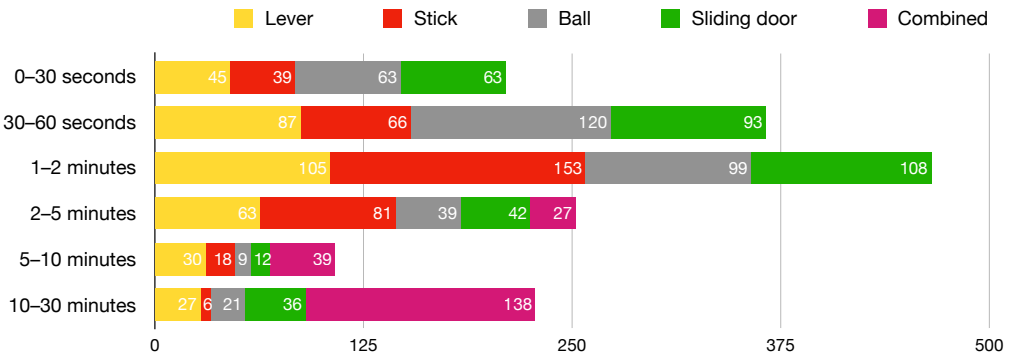

Figure 2: Histogram of the video playtime distribution with pseudo-logarithmically scaled bins. The lower limits of the bins are excluded while the upper limits are included, and the different mechanisms are color coded. The different lockbox mechanisms are color coded.

3.3.2 Label Statistics

We provide human-annotated mechanism state, mouse-to-mechanism proximity, and both mouse-mechanism and mouse-reward action labels for mouse numbers 291 and 324, to avoid information leakage between labeled and unlabeled data splits. This totals to 15 hours and 25 minutes, i.e., more than 1.6 million frames of video data, as Table 3 shows.

Figure 3 shows the inter-rater reliability, i.e., Cohen's kappa coefficients, (McHugh, 2012) for all pairs of human raters. On average our human raters annotate almost all proximity and touch labels with a moderate or even strong agreement, but have a lower agreement for the stick mechanism. In contrast, they annotate bite labels with only minimal to weak agreement. We account this to the bite label being particularly hard to annotate as it is not always directly visible in the videos.

Table 4 shows the playtime shares of different action label classes. It gives an overview of the density of active behavior labels for the different lockbox mechanisms relative to the total labeled playtime. It furthers gives the density of either behavior label being active for any of the mechanisms.

3.4 Benchmark Results

Next to manually annotating the trials of two mice, we used our keypoint tracking pipeline to automatically generate labels on a frame-to-frame basis, which are used here as a benchmark method. The trials of the two mice are considered to be the test set for our benchmark method and are therefore not used in its training procedure. Analogous to the inter-rater reliability of the previous section, we compare the resulting action labels from our benchmark to both human raters in Figure 3.

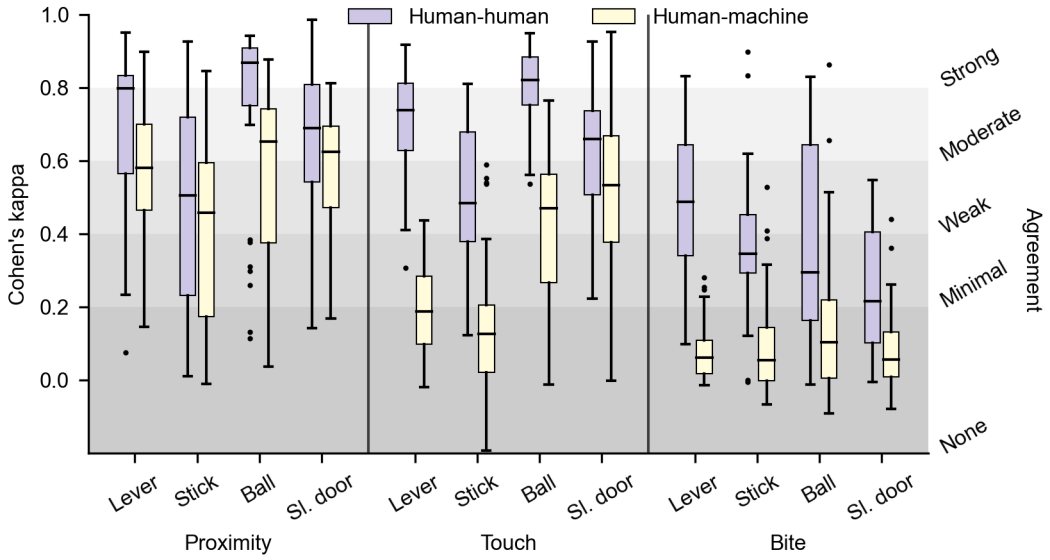

Figure 3: Inter-rater reliability measured using Cohen's kappa coefficients, to assess both human-human and human-machine agreement in label annotation for both different action classes and mechanisms. The human-human inter-rater reliability is colored purple while the human-machine inter-rater reliability is colored yellow.

Table 4: Playtime shares of different action labels relative to the total playtime of the labeled videos in percent.

	Lever	**Stick**	**Ball**	**Sl.Door**	**Any**
Proximity	15.73	19.05	13.41	18.97	55.39
Touch	7.06	4.07	7.00	9.32	25.50
Bite	1.81	1.50	3.41	1.42	8.12

The benchmark method performs well for proximity labels. This becomes apparent when comparing the human-machine against the human-human inter-rater reliability, where our benchmark method mostly reaches human-level performance. In contrast, for both touch and bite labels it is outperformed by our human raters. These two action labels require a higher accuracy in the detection of the pose of the mouse as well as the reconstruction of the bounding box of the mechanisms. Therefore, the reliability for touch and bite labels are naturally lower than for proximity.

Interestingly, the proximity and touch action labels for both the ball and sliding door have a higher inter-rater reliability than the lever and the stick. We assume that this difference originates from the ball and the sliding door mechanisms being more easily approximated by bounding boxes than the lever and the stick.

3.5 Limitations

Our dataset has three limitations. First, since the video recording was pseudo-synchronized by our recording software, the frames of different cameras have been captured with a temporal desynchronization. We sampled the average asynchronicity to be 1.39 frames with a standard deviation of 1.50 frames. We do not expect this to cause any issues other than in settings that would, e.g., require 3-dimensional keypoints to be tracked with an accuracy much higher than the accuracy we annotated our labels with. Second, not all videos share the same exact positioning of the cameras as the videos have been recorded over the course of several months so our setup had to be rearranged over time. And third, due to technical issues during the data acquisition, i.e., insufficient lighting conditions

and severe camera dislocation, some trials had to be discarded from the dataset which lead to an imbalanced number of videos per mouse.

4 Conclusion

In this work, we presented the—to the best of our knowledge—first available single-agent, multi-perspective video dataset of mice showing intelligent behavior as they learn to solve mechanical puzzle mechanisms. These so-called lockboxes consist of either one of four mechanisms or their combination, and are baited with a food reward. As a benchmark for novel approaches, we provide a range of human-annotated labels—the mechanism states, the proximity of a mouse to a mechanism, if a mouse is touching or biting a mechanism, and when the mouse reaches the food reward—for 13% of our 117 hours and 52 minutes long video dataset. This equals an increase of over 33% in total video playtime available through any mouse dataset available today.

As an initial comparison of human annotations with automated methods, we provide labels generated from a state-of-the-art keypoint-based pose tracking approach as a benchmark method. We compare the human-human against the human-machine inter-rater reliability and find that the automatic detection of the proximity of a mouse to the lockbox mechanisms can be considered robust, while the more fine-grained action labels touching and biting require more precise keypoint localization rendering the benchmark results unreliable. However, since these labels are indispensable for studying the complex behavior of an animal and to understand how this contributes to learning, we are convinced that approaches beyond keypoint (pose) tracking, e.g., representations learnt without any or under self-supervision, are crucial to future advancements in neuroscience. We hope that our dataset will contribute to this advancement by challenging and inspiring others.

An anonymized preview of our dataset is available for the reviewers of this manuscript at `https://www.dropbox.com/scl/fo/h7nkai8574h23qfq9m1b2/AP4gNZOpDJJ7z0yGtbWQiOc?rlkey=w36jzxqjkghg0j0xva5zsxy2v&st=5r9msqjw&dl=0`

Acknowledgments

We thank our encouraged lab assistants for their support with cleaning the raw video data and annotating the labels. Their dedication and hard work were essential to composing the presented dataset.

This project was funded by the Deutsche Forschungsgemeinschaft (DFG, German Research Foundation).

Ethics Statement

Our research did not involve human subjects, sensitive data, harmful insights, nor methodologies or applications that may raise ethical concerns.

For generating the dataset underlying the present article, videos were recorded from 12 female C57BL/6J mice. Animals were at the age of 9 to 12 weeks when the videos used for the present article were recorded. Animal research was conducted in compliance with the local laws and regulations on the protection of animals used for scientific purposes.

The authors declare that they have no conflicts of interest. No sponsorships influenced this research.

References

Geneticist seeks engineer: must like flies and worms. *Nature Methods*, 4(6):463, 2007. DOI 10.1038/nmeth0607-463.

Ali Alameer, Ilias Kyriazakis, and Jaume Bacardit. Automated recognition of postures and drinking behaviour for the detection of compromised health in pigs. *Scientific Reports*, 10:13665, 2020. DOI 10.1038/s41598-020-70688-6.

David J. Anderson and Pietro Perona. Toward a Science of Computational Ethology. *Neuron*, 84 (1):18–31, 2014. DOI 10.1016/j.neuron.2014.09.005.

Ronald C. Arkin, Masahiro Fujita, Tsuyoshi Takagi, and Rika Hasegawa. An ethological and emotional basis for human-robot interaction. *Robotics and Autonomous Systems*, 42(3–4):191–201, 2003. DOI 10.1016/S0921-8890(02)00375-5.

Eleanor Batty, Matthew Whiteway, Shreya Saxena, Dan Biderman, Taiga Abe, Simon Musall, Winthrop Gillis, Jeffrey Markowitz, Anne Churchland, John P Cunningham, Sandeep R Datta, Scott Linderman, and Liam Paninski. BehaveNet: nonlinear embedding and Bayesian neural decoding of behavioral videos. In *Advances in Neural Information Processing Systems*, volume 32, 2019.

Dan Biderman, Matthew R. Whiteway, Cole Hurwitz, Nicholas Greenspan, Robert S. Lee, Ankit Vishnubhotla, Richard Warren, Federico Pedraja, Dillon Noone, Michael M. Schartner, Julia M. Huntenburg, Anup Khanal, Guido T. Meijer, Jean-Paul Noel, Alejandro Pan-Vazquez, Karolina Z. Socha, Anne E. Urai, John P. Cunningham, Nathaniel B. Sawtell, and Liam Paninski. Lightning Pose: improved animal pose estimation via semi-supervised learning, Bayesian ensembling and cloud-native open-source tools. *Nature Methods*, 2024. DOI 10.1038/s41592-024-02319-1.

Ari Blau, Evan S Schaffer, Neeli Mishra, Nathaniel J Miska, The International Brain Laboratory, Liam Paninski, and Matthew R Whiteway. A study of animal action segmentation algorithms across supervised, unsupervised, and semi-supervised learning paradigms, 2024. URL `https://arxiv.org/abs/2407.16727v1`.

James P. Bohnslav, Nivanthika K. Wimalasena, Kelsey J. Clausing, Yu Y. Dai, David A. Yarmolinsky, Tomás Cruz, Adam D. Kashlan, M. Eugenia Chiappe, Lauren L. Orefice, Clifford J. Woolf, and Christopher D. Harvey. DeepEthogram, a machine learning pipeline for supervised behavior classification from raw pixels. *eLife*, 10:e63377, 2021. DOI 10.7554/eLife.63377.

Marcus N. Boon, Niek Andresen, Soledad Traverso, Sophia Meier, Friedrich Schuessler, Olaf Hellwich, Lars Lewejohann, Christa Thöne-Reineke, Henning Sprekeler, and Katharina Hohlbaum. Mechanical problem solving in mice. *bioRxiv*, 2024. URL `https://www.biorxiv.org/content/early/2024/07/30/2024.07.29.605658`.

Biagio Brattoli, Uta Büchler, Michael Dorkenwald, Philipp Reiser, Linard Filli, Fritjof Helmchen, Anna-Sophia Wahl, and Björn Ommer. Unsupervised behaviour analysis and magnification (uBAM) using deep learning. *Nature Machine Intelligence*, 3:495–506, 2021. DOI 10.1038/s42256-021-00326-x.

Oliver Brock. Intelligence as Computation, 2024. URL `https://arxiv.org/abs/2405.16604v1`.

Otto Brookes, Majid Mirmehdi, Colleen Stephens, Samuel Angedakin, Katherine Corogenes, Dervla Dowd, Paula Dieguez, Thurston C. Hicks, Sorrel Jones, Kevin Lee, Vera Leinert, Juan Lapuente, Maureen S. McCarthy, Amelia Meier, Mizuki Murai, Emmanuelle Normand, Virginie Vergnes, Erin G. Wessling, Roman M. Wittig, Kevin Langergraber, Nuria Maldonado, Xinyu Yang, Klaus Zuberbühler, Christophe Boesch, Mimi Arandjelovic, Hjalmar Kühl, and Tilo Burghardt. PanAf20K: A Large Video Dataset for Wild Ape Detection and Behaviour Recognition. *International Journal of Computer Vision*, 132(8):3086–3102, 2024. DOI 10.1007/s11263-024-02003-z.

Xavier P. Burgos-Artizzu, Piotr Dollár, Dayu Lin, David J. Anderson, and Pietro Perona. Social behavior recognition in continuous video. In *2012 IEEE Conference on Computer Vision and Pattern Recognition*, pp. 1322–1329, 2012. DOI 10.1109/CVPR.2012.6247817.

Katherine S. Button, John P. A. Ioannidis, Claire Mokrysz, Brian A. Nosek, Jonathan Flint, Emma S. J. Robinson, and Marcus R. Munafò. Power failure: why small sample size undermines the reliability of neuroscience. *Nature Reviews Neuroscience*, 14(5):365–376, 2013. DOI 10.1038/nrn3475.

Sandeep Robert Datta, David J. Anderson, Kristin Branson, Pietro Perona, and Andrew Leifer. Computational Neuroethology: A Call to Action. *Neuron*, 104(1):11–24, 2019. DOI 10.1016/j.neuron.2019.09.038.

Timothy W. Dunn, Jesse D. Marshall, Kyle S. Severson, Diego E. Aldarondo, David G. C. Hildebrand, Selmaan N. Chettih, William L. Wang, Amanda J. Gellis, David E. Carlson, Dmitriy Aronov, Winrich A. Freiwald, Fan Wang, and Bence P. Ölveczky. Geometric deep learning enables 3D kinematic profiling across species and environments. *Nature Methods*, 18:564–573, 2021. DOI 10.1038/s41592-021-01106-6.

Isla Duporge, Maksim Kholiavchenko, Roi Harel, Scott Wolf, Dan Rubenstein, Meg Crofoot, Tanya Berger-Wolf, Stephen Lee, Julie Barreau, Jenna Kline, Michelle Ramirez, and Charles Stewart. BaboonLand Dataset: Tracking Primates in the Wild and Automating Behaviour Recognition from Drone Videos, 2024. URL `https://arxiv.org/abs/2405.17698v3`.

Eyrun Eyjolfsdottir, Steve Branson, Xavier P.Burgos-Artizzu, Eric D. Hoopfer, Jonathan Schor, David J. Anderson, and Pietro Perona. Fly v. Fly Dataset, 2021. DOI 10.22002/D1.1893.

Edoardo Fazzari, Donato Romano, Fabrizio Falchi, and Cesare Stefanini. Animal Behavior Analysis Methods Using Deep Learning: A Survey, 2024. URL `https://arxiv.org/abs/2405.14002v1`.

Olivier Friard and Marco Gamba. BORIS: a free, versatile open-source event-logging software for video/audio coding and live observations. *Methods in Ecology and Evolution*, 7:1325001330, 2016. DOI 10.1111/2041-210X.12584.

Alexander I. Hsu and Eric A. Yttri. B-SOiD, an open-source unsupervised algorithm for identification and fast prediction of behaviors. *Nature Communications*, 12:5188, 2021. DOI 10.1038/s41467-021-25420-x.

Bo Hu, Bryan Seybold, Shan Yang, Avneesh Sud, Karla Barron, Yi Liu, Paulyn Cha, Marcelo Cosino, Ellie Karlsson, Janessa Kite, Ganesh Kolumam, Joseph Preciado, Chunlian Solorio, José Zavala-and Zhang, Xiaomeng Zhang, Martin Voorbach, Ann E. Tovcimak, J. Graham Ruby, and David A. Ross. 3D mouse pose from single-view video and a new dataset. *Scientific Reports*, 13: 13554, 2023. DOI 10.1038/s41598-023-40738-w.

Yinjun Jia, Shuaishuai Li, Xuan Guo, Bo Lei, Junqiang Hu, Xiao-Hong Xu, and Wei Zhang. Selfee, self-supervised features extraction of animal behaviors. *eLife*, 11:e76218, 2022. DOI 10.7554/eLife.76218.

Maksim Kholiavchenko, Jenna Kline, Michelle Ramirez, Sam Stevens, Alec Sheets, Reshma Babu, Namrata Banerji, Elizabeth Campolongo, Matthew Thompson, Nina Van Tiel, Jackson Miliko, Eduardo Bessa, Isla Duporge, Tanya Berger-Wolf, Daniel Rubenstein, and Charles Stewart. KABR: In-Situ Dataset for Kenyan Animal Behavior Recognition from Drone Videos. In *2024 IEEE/CVF Winter Conference on Applications of Computer Vision Workshops (WACVW)*, pp. 31–40, 2024. DOI 10.1109/WACVW60836.2024.00011.

Miloš Kršiak. Ethopharmacology: A historical perspective. *Neuroscience & Biobehavioral Reviews*, 15(4):439–445, 1991. DOI 10.1016/S0149-7634(05)80124-1.

Jessica Y. Kuo, Alexander J. Denman, Nicholas J. Beacher, Joseph T. Glanzberg, Yan Zhanga, Yun Li, and Da-Ting Lin. Using deep learning to study emotional behavior in rodent models. *Frontiers in Behavioral Neuroscience*, 16, 2022. DOI 10.3389/fnbeh.2022.1044492.

Daniel A. Levitis, William Z. Lidicker, and Glenn Freund. Behavioural biologists do not agree on what constitutes behaviour. *Animal Behaviour*, 78(1):103–110, 2009. DOI 10.1016/j.anbehav.2009.03.018.

Ci Li, Ylva Mellbin, Johanna Krogager, Senya Polikovsky, Martin Holmberg, Nima Ghorbani, Michael J. Black, Hedvig Kjellström, Silvia Zuffi, and Elin Hernlund. The Poses for Equine Research Dataset (PFERD). *Science Data*, 11:497, 2024. DOI 10.1038/s41597-024-03312-1.

Kevin Luxem, Petra Mocellin, Falko Fuhrmann, Johannes Kürsch, Stephanie R. Miller, Jorge J. Palop, Stefan Remy, and Pavol Bauer. Identifying behavioral structure from deep variational embeddings of animal motion. *Communications Biology*, 5:1267, 2022. DOI 10.1038/s42003-022-04080-7.

Kevin Luxem, Jennifer J. Sun, Sean P. Bradley, Keerthi Krishnan, Eric Yttri, Jan Zimmermann, Talmo D. Pereira, and Mark Laubach. Open-source tools for behavioral video analysis: Setup, methods, and best practices. *eLife*, 12:e79305, 2023. DOI 10.7554/eLife.79305.

Xiaoxuan Ma, Stephan Kaufhold, Jiajun Su, Wentao Zhu, Jack Terwilliger, Andres Meza, Yixin Zhu, Federico Rossano, and Yizhou Wang. ChimpACT: A Longitudinal Dataset for Understanding Chimpanzee Behaviors. In *Advances in Neural Information Processing Systems*, volume 36, 2023.

Jesse D. Marshall, Ugne Klibaite, Amanda Gellis, Diego E. Aldarondo, Bence P. Ölveczky, and Timothy W. Dunn. The PAIR-R24M Dataset for Multi-animal 3D Pose Estimation. In *Advances in Neural Information Processing Systems*, volume 35, 2021.

Alexander Mathis, Pranav Mamidanna, Kevin M. Cury, Taiga Abe, Venkatesh N. Murthy, Mackenzie Weygandt Mathis, and Matthias Bethge. DeepLabCut: markerless pose estimation of user-defined body parts with deep learning. *Nature Neuroscience*, 21:1281–1289, 2018. DOI 10.1038/s41593-018-0209-y.

Michael H. McCullough and Geoffrey J. Goodhill. Unsupervised quantification of naturalistic animal behaviors for gaining insight into the brain. *Current Opinion in Neurobiology*, 70:89–100, 2021. DOI 10.1016/j.conb.2021.07.014.

Mary L. McHugh. Interrater reliability: the kappa statistic. *Biochemia Medica*, 22(3):276–282, 2012. DOI 10.11613/bm.2012.031.

Ádám Miklósi, Péter Korondi, Vicente Matelán, and Márta Gácsi. Ethorobotics: A New Approach to Human-Robot Relationship. *Frontiers in Psychology*, 8:958, 2017. DOI 10.3389/fpsyg.2017.00958.

Tanmay Nath, Alexander Mathis, An Chi Chen, Amir Patel, Matthias Bethge, and Mackenzie W Mathis. Using deeplabcut for 3d markerless pose estimation across species and behaviors. *Nature Protocols*, 2019. DOI 10.1038/s41596-019-0176-0.

Xun Long Ng, Kian Eng Ong, Qichen Zheng, Yun Ni, Si Yong Yeo, and Jun Liu. Animal Kingdom: A Large and Diverse Dataset for Animal Behavior Understanding. In *2022 IEEE/CVF Conference on Computer Vision and Pattern Recognition (CVPR)*, pp. 19001–19012, 2022. DOI 10.1109/CVPR52688.2022.01844.

Malte Pedersen, Joakim Bruslund Haurum, Stefan Hein Bengtson, and Thomas B. Moeslund. 3D-ZeF: A 3D Zebrafish Tracking Benchmark Dataset. In *2020 IEEE/CVF Conference on Computer Vision and Pattern Recognition (CVPR)*, pp. 2423–2433, 2020. DOI 10.1109/CVPR42600.2020.00250.

Talmo D. Pereira, Nathaniel Tabris, Arie Matsliah, David M. Turner, Junyu Li, Shruthi Ravindranath, Eleni S. Papadoyannis, Edna Normand, David S. Deutsch, Z. Yan Wang, Catalin C. Smith, Grace C. McKenzie-and Mitelut, Marielisa Diez Castro, Mikhail Uva, John D'and Kislin, Dan H. Sanes, Sarah D. Kocher, Samuel S.-H. Wang, Annegret L. Falkner, Joshua W. Shaevitz, and Mala Murthy. SLEAP: A deep learning system for multi-animal pose tracking. *Nature Methods*, 19:486–495, 2022. DOI 10.1038/s41592-022-01426-1.

Mitchell Rogers, Gaël Gendron, David Arturo Soriano Valdez, Mihailo Azhar, Yang Chen, Shahrokh Heidari, Caleb Perelini, Padriac O'Leary, Kobe Knowles, Izak Tait, Simon Eyre, Michael Witbrock, and Patrice Delmas. Meerkat Behaviour Recognition Dataset, 2023. URL `https://arxiv.org/abs/2306.11326v1`.

Helena Russello, Rik van der Tol, and Gert Kootstra. T-LEAP: Occlusion-robust pose estimation of walking cows using temporal information. *Computers and Electronics in Agriculture*, 192: 106559, 2022. DOI 10.1016/j.compag.2021.106559.

Cristina Segalin, Jalani Williams, Tomomi Karigo, May Hui, Moriel Zelikowsky, Jennifer J. Sun, Pietro Perona, David J. Anderson, and Ann Kennedy. The Mouse Action Recognition System (MARS) software pipeline for automated analysis of social behaviors in mice. *eLife*, 10:e63720, 2021. DOI 10.7554/eLife.63720.

Jennifer J. Sun, Tomomi Karigo, Dipam Chakraborty, Sharada P. Mohanty, Benjamin Wild, Quan Sun, Chen Chen, David J. Anderson, Pietro Perona, Yisong Yue, and Ann Kennedy. The Multi-Agent Behavior Dataset: Mouse Dyadic Social Interactions. In *Advances in Neural Information Processing Systems*, volume 35, 2021a.

Jennifer J. Sun, Ann Kennedy, Eric Zhan, David J. Anderson, Yisong Yue, and Pietro Perona. Task Programming: Learning Data Efficient Behavior Representations. In *2021 IEEE/CVF Conference on Computer Vision and Pattern Recognition*, pp. 2875–2884, 2021b. DOI 10.1109/CVPR46437.2021.00290.

Nikolaas Tinbergen. On aims and methods of ethology. *Zeitschrift für Tierpsychologie*, 20(1): 410–433, 1961. DOI 10.1111/j.1439-0310.1963.tb01161.x.

Shuqin Tu, Jiaying Du, Yun Liang, Yuefei Cao, Weidian Chen, Deqin Xiao, and Qiong Huang. Tracking and Behavior Analysis of Group-Housed Pigs Based on a Multi-Object Tracking Approach. *Animals*, 14(19):2828, 2024. DOI 10.3390/ani14192828.

Caleb Weinreb, Jonah E. Pearl, Sherry Lin, Mohammed Abdal Monium Osman, Libby Zhang, Sidharth Annapragada, Eli Conlin, Red Hoffmann, Sofia Makowska, Winthrop F. Gillis, Maya Jay, Shaokai Ye, Alexander Mathis, Mackenzie W. Mathis, Talmo Pereira, Scott W. Linderman, and Sandeep Robert Datta. Keypoint-MoSeq: parsing behavior by linking point tracking to pose dynamics. *Nature Methods*, 21:1329–1339, 2024. DOI 10.1038/s41592-024-02318-2.

Tianxun Zhou, Calvin Chee Hoe Cheah, Eunice Wei Mun Chin, Jie Chen, Hui Jia Farm, Eyleen Lay Keow Goh, and Keng Hwee Chiam. ContrastivePose: A contrastive learning approach for self-supervised feature engineering for pose estimation and behavorial classification of interacting animals. *Computers in Biology and Medicine*, 165:107416, 2023. DOI 10.1016/j.compbiomed.2023.107416.

Ali Zia, Renuka Sharma, Reza Arablouei, Greg Bishop-Hurley, Jody McNally, Neil Bagnall, Vivien Rolland, Brano Kusy, Lars Petersson, and Aaron Ingham. CVB: A Video Dataset of Cattle Visual Behaviors, 2023. URL `https://arxiv.org/abs/2305.16555v2`.

A Appendix

A.1 Lockboxes with Unlocked Mechanisms

Figure 4 shows the opened lockboxes with symbolized food baits; see Figures 1b and 1c for reference.

A.2 Keypoint tracking

The DLC mouse-tracker consists of the keypoints: "nose", "ear_left", "ear_right", "tail_base", "front_paw_left", "front_paw_right", "back_paw_left", and "back_paw_right". The DLC lockbox trackers consist of the keypoints: "lever_tip", "other_lever_tip", "stick_head", "ball", and "sliding_door".

The DLC trackers are trained using human-annotated frames from the videos for which no action labels are available. The test sets of the trackers consist of labeled frames from the videos for which action labels are available (i.e. mouse 324 and 291).

Figure 5 shows examples of the keypoints used for training a DLC model that tracks the 2-dimensional locations of both a mouse and the lockbox mechanisms.

The training and test error (RMSE of the xy-coordinates in pixels) of the DLC trackers will be provided by the end of the rebuttal period.

We have published the DLC tracks we created alongside our dataset.

A.3 Example Frames for Labels

Figure 6 shows a selection of examples for our different label classes.

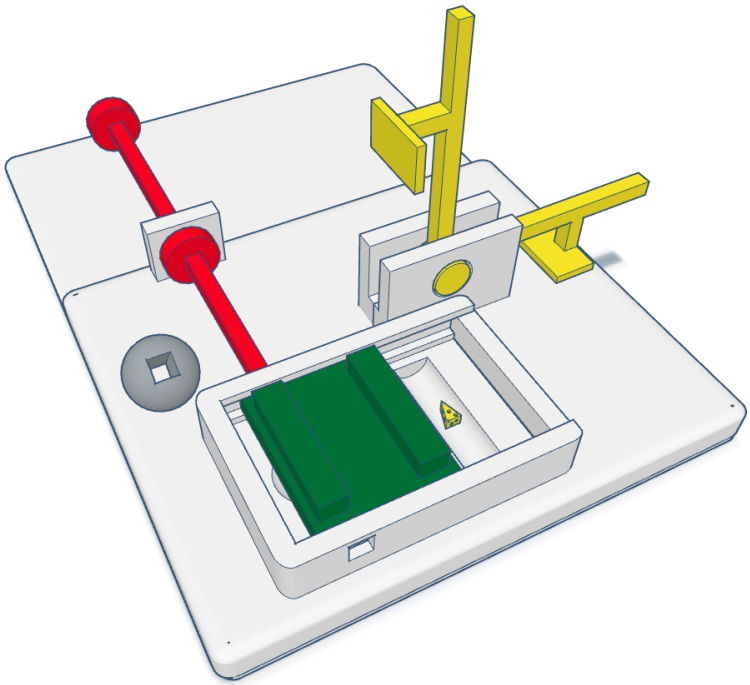

(a) Unlocked lockbox of combined mechanisms baited with a symbolized food reward underneath the sliding door.

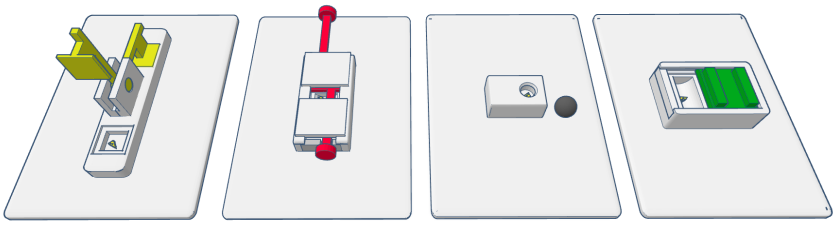

(b) Unlocked single-mechanism lockboxes baited with a symbolized food reward underneath each mechanisms.

Figure 4: Unlocked lockboxes and their mechanisms: lever (yellow), stick (red), ball (gray), and sliding door (green). This depiction contains symbolized food baits.

A.4 Disclosure of Our Approach to Literature Research

We have decided to silently add this section to our appendix as we consider it good practice to disclose all aspects of a scientific work, and we hope that it is useful to aspiring scientists.

For our rigorous literature research we mainly relied on the Google Scholar (`https://scholar.google.com`) and Semantic Scholar (`https://www.semanticscholar.org`) search engines using keywords and phrases relevant to our work. To further bolster the reliability of our literature research, we adopted a Markov blanket-like search pattern: for all of our references that we consider central to our work, we have filtered for further relevant work among their references, citations, and—depending on the context—both the references and citations of their citations. This allows us to search a highly contextualized corpus of several thousand publications in a structured, semantically meaningful, and thereby laborsaving way, significantly decreasing the risk of missing any relevant work.

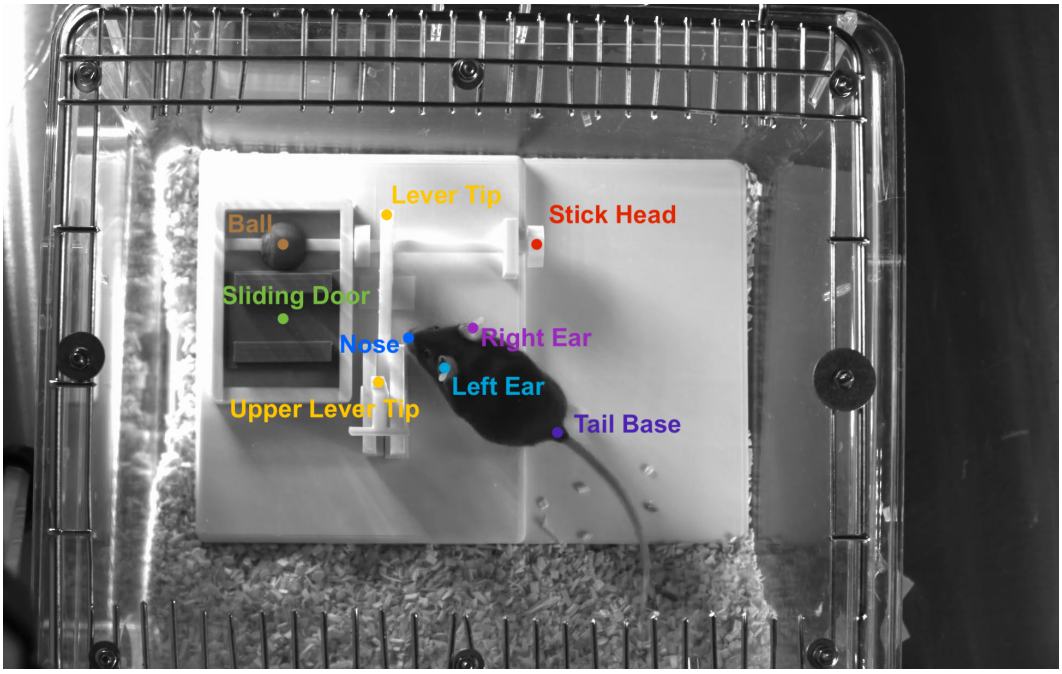

Figure 5: Examples of the keypoints used for tracking mice and lockbox mechanisms.

(a) Frame example with mouse in proximity to lever and touching the sliding door.

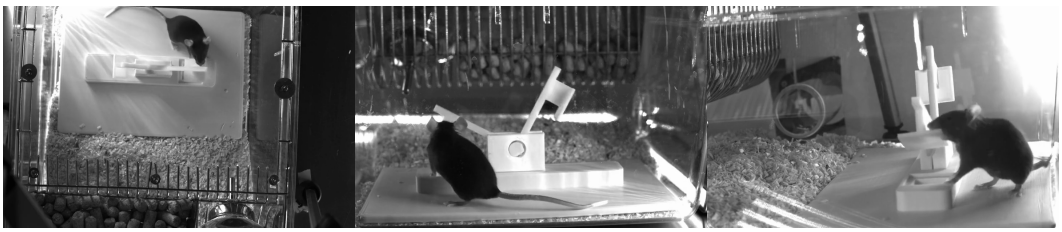

(b) Frame example with mouse in proximity to and biting the lever.

(c) Frame example with mouse in proximity to the stick.

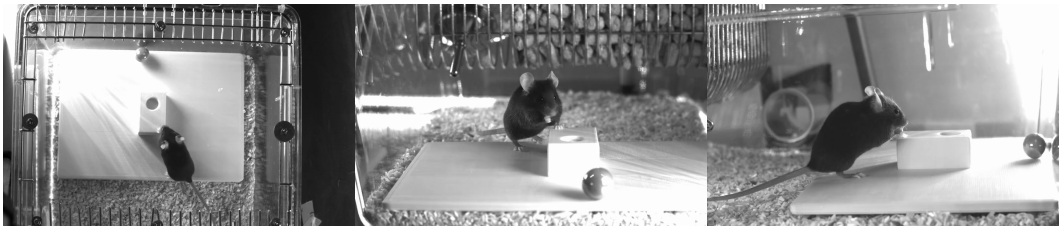

(d) Frame example with no action label active while the ball mechanism is unlocked.

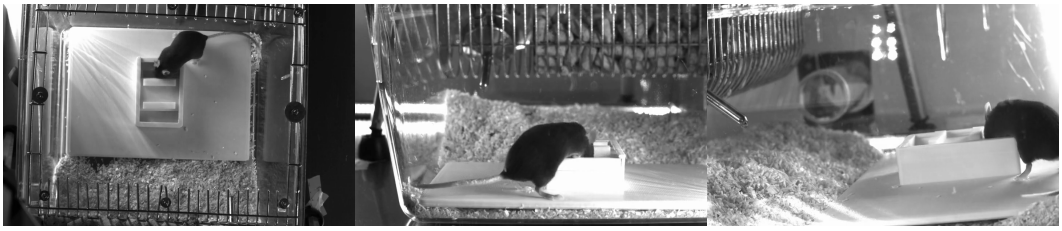

(e) Frame example with mouse in proximity to the sliding door while the sliding door mechanism is unlocked.

Figure 6: Example frames from labeled videos showing mice performing different actions.