Reformulating Zero-shot Action Recognition for Multi-label Actions

Alec Kerrigan **Kevin Duarte** **Yogesh S Rawat** **Mubarak Shah**
Center for Research in Computer Vision , University of Central Florida
{aleckerrigan,kevin_duarte}@knights.ucf.edu, {yogesh,shah}@crcv.ucf.edu

Abstract

The goal of zero-shot action recognition (ZSAR) is to classify action classes which were not previously seen during training. Traditionally, this is achieved by training a network to map, or regress, visual inputs to a semantic space where a nearest neighbor classifier is used to select the closest target class. We argue that this approach is sub-optimal due to the use of nearest neighbor on static semantic space and is ineffective when faced with multi-label videos - where two semantically distinct co-occurring action categories cannot be predicted with high confidence. To overcome these limitations, we propose a ZSAR framework which does not rely on nearest neighbor classification, but rather consists of a pairwise scoring function. Given a video and a set of action classes, our method predicts a set of confidence scores for each class independently. This allows for the prediction of several semantically distinct classes within one video input. Our evaluations show that our method not only achieves strong performance on three single-label action classification datasets (UCF-101, HMDB, and RareAct), but also outperforms previous ZSAR approaches on a challenging multi-label dataset (AVA) and a real-world surprise activity detection dataset (MEVA). link to code and project page?

1 Introduction

Current image and video classification models require large labeled training datasets but they perform really well on previously seen classes. However, if novel classes are presented to these models, as is the case in many real-world applications, they tend to fail. The system has to be retrained with additional samples for this class to correctly predict these novel classes, which requires additional training time as well as computational resources. Therefore, it would be beneficial if we can train a single system on a fixed dataset which can be applied to new, previously unseen classes. To this end, zero-shot learning (ZSL) approaches [1] have been proposed which leverage semantic information, e.g. textual descriptions or class names, and relate them to new unseen class categories.

In this work, we focus on zero-shot action recognition (ZSAR), where the goal is to classify videos for unseen action categories. There has been a great progress focusing on ZSAR [2, 3, 4], however, most of these existing methods utilize a similar fundamental approach. This approach projects a video representation to a fixed semantic space and perform classification using a nearest neighbor operation. We argue that such a solution is sub-optimal because the class selection is performed on a static text-based semantic space. This formulation forces classes that are more similar in the semantic space to have closer classification boundaries, even if they are visually dissimilar; conversely, actions that are visually similar, can appear further apart in the semantic space. For example, the action "Tennis Swing" closer in semantic space to "Swing" (i.e. a child on a swing) than "Table Tennis Shot" even though it is more visually similar to the latter action.

35th Conference on Neural Information Processing Systems (NeurIPS 2021), Sydney, Australia.

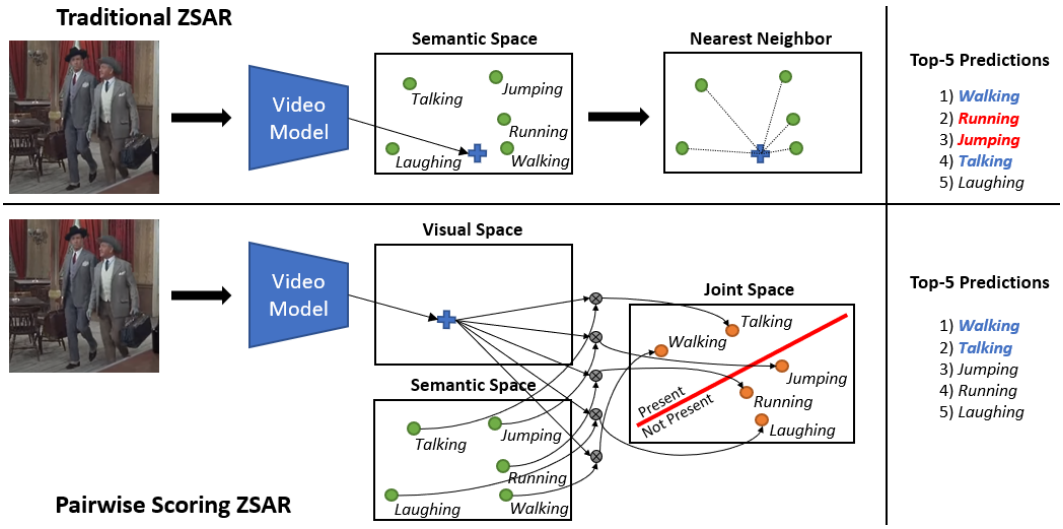

Figure 1: Due to nearest neighbor classification, conventional ZSAR methods (top) cannot predict semantically dissimilar actions "Walking" and "Talking" without actions "Running" and "Jumping" also being predicted. Our proposed pairwise scoring approach (bottom), however, can predict two dissimilar classes by mapping both the video and semantic embeddings into a joint embedding space on which a linear decision boundary can be used. can you show the input as sequence of frames for video? also can you improve the placement of 'pairwuse scoring zsar? maybe vertical on the left, or same position as 'traditional zsar'?

In addition, this is detrimental in the multi-label case where multiple semantically distinct actions can occur within a sample. This is illustrated in Figure 1 (top). In conventional ZSAR approaches, the video network can only generate a single representation in the semantic space so the actions "Walking" and "Talking" can not both be predicted without many incorrect action categories also being predicted. This issue could be solved by fine-tuning the textual encoder which generates the semantic space (i.e. moving the representations of "Walking" and "Talking" closer together). However previous approaches train the video models by regressing to the action class's semantic feature vector, which would collapse to a trivial solution if the vector is not fixed: if the textual encoder is fine-tuned, then it can map all classes to zero vectors which are easily regressed to by the video model. Several constraints could prevent this collapse, however such solutions have not, to our knowledge, been proposed in the ZSAR literature.

We propose a novel solution to this problem where a model finds agreement between the features from a pair of inputs (i.e. the video and a semantic/textual feature vector) and outputs a match vs. no-match probability score. Our method consists of a pairwise scoring function which has two main benefits. First, the model can refine the input text features through additional parameterized layers, without collapsing to a trivial solution. Second, the method outputs individual action probability scores used for classification instead of relying on nearest neighbor. Figure 1 (bottom) depicts this behaviour. The Pairwise Scoring ZSAR (PS-ZSAR) approach is able to map the merged the visual and semantic representations into a joint space on which a decision boundary can be created to successfully predict both "Walking" and "Talking" without predicting irrelevant actions.

PS-ZSAR is trained end-to-end using standard classification losses. We evaluate our proposed network on five video datasets. On three single-label action recognition datasets - UCF-101, HMDB, and RareAct - it achieves strong performance when compared to previous approaches. We report, to the best of our knowledge, the first results for zero-shot multi-label action recognition on the AVA dataset, which we believe will be a challenging baseline for future ZSAR methods. Lastly, we use PS-ZSAR in the NIST ActEV challenge "Surprise Activity" task which demonstrates the method's ability to scale to difficult real-world scenarios. you want to cite these datasets and also include MEVA?

2 Related Work

There is a vast literature pertaining the zero-shot action recognition (ZSAR) [1]. There are bodies of work on *transductive* ZSAR [5, 6, 7, 8], where test data (i.e. videos) are available during training but classes are not, and *generalized* ZSAR (GZSAR) [9, 10, 11, 12, 13, 14] which evaluates method performance on both seen and unseen classes. However, in this work, we concentrate on *inductive* ZSAR in which the test data and classes are unknown during training and the method is evaluated only on unseen classes.

2.1 Zero-shot Action Recognition

Typical zero-shot video classification systems [15, 16, 3, 17, 18] extract visual features from frames or 3D video clips using pre-trained image or video networks, resepctively (e.g. ResNet [19] or C3D [20] models), and then train a separate model that maps the visual features to a semantic embedding space. For ZSAR methods, if video networks generalize well to the semantic space, the model can perform well on semantic embeddings for classes previously unseen during training. At test time, these methods predict the class which has semantic embedding that is the nearest neighbor of the model's output. The semantic space usually takes the form of text embeddings from a Word2Vec [21] model. In other methods [22, 23, 24], the semantic space consists of attributes manually selected by an expert; however, such methods are difficult to apply to real-world scenarios.

There have been a variety of methods to learn models which can map video representations to semantic space. Zhu *et al.* [2] treat ZSAR as a generalized multi-instance learning problem and learn a kernelized representation that can be directly compared with unseen action prototypes. Action2Vec [3] uses a combination of supervised classification loss and a ranking loss to map video features to textual space. Recently, Brattoli *et al.* [4] showed that large performance increases can be obtained by learning the video model rather than using pre-extracted video features. We find that this idea can be extended to the text model: by learning improved text representations, i.e. refining the static Word2Vec embeddings, we achieve improved generalization on unseen classes.

2.2 Multi-label Zero Shot Learning

Multi-label zero shot learning has been explored in limited capacity, primarily for images. Lee [25] utilized a graph structure to learn semantic dependencies between words in a class name to learn relevant textual features. Huynh and Elhamifar [26] used an attention framework to map important segments of an image to a join visual-label embedding space for classification. Huang [27] used a similar approach while also proposing transferring learned embedding spaces from systems trained on ImageNet. However, multi-label zero shot learning for action recognition is a far less explored space. To the best of our knowledge, Wang and Chen [28] propose the first work to address this problem. Their work focuses on learning temporal relationships between frames in a video, then using a ranking loss to learn alongside a semantic encoder. We evaluate on two multi-label datasets, AVA and MEVA, and show that our approach can scale to these challenging benchmarks.

3 Method

3.1 Problem Formulation

Zero-shot action recognition aims to classify unseen actions, $\mathcal{U}$, by transferring knowledge learned from seen training classes, $\mathcal{S}$. The training set, $D_S = \{(x, y) \,|x \in \mathcal{X}, y \in \mathcal{S}\}$, consists of labeled videos x in video space $\mathcal{X}$ and label y. The test set is defined as $D_U = \{(x, y) \,|x \in \mathcal{X}, y \in \mathcal{U}\}$. The action classes in both datasets must be disjoint, i.e. $\mathcal{S} \cap \mathcal{U} = \emptyset$. The goal of ZSAR is to predict a label for a videos of unseen activities, i.e. $\mathcal{X} \rightarrow \mathcal{U}$.

For each class, a semantic embedding vector $\psi(y) \in \mathbb{R}^D$ of length D is obtained. These vectors are traditionally obtained by averaging word2vec [21] embeddings for each word in the class name, however different text encoders (e.g. sent2vec [29], BERT [30]) could also be used. Conventional ZSAR methods learn a parameterized model f_θ which maps an input video to the semantic space, i.e. $f_\theta : \mathcal{X} \rightarrow \mathbb{R}^D$. Then, for a given video, x, a classification is performed by a nearest neighbor in the

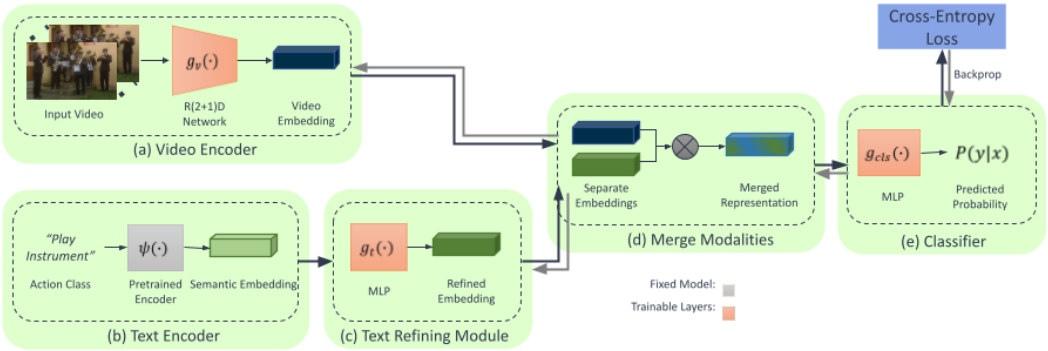

Figure 2: **Overview of our proposed network architecture.** Our method consists of four main parts: (a) The video encoder which extracts video features from a given video clip, (b) the text encoder which generates the semantic embedding from the action class name or natural language description, (c) the refining module which fine-tunes the semantic embeddings during training, and (d) the scoring function which generates the probability that the pair of inputs match. The network is trained end-to-end using cross-entropy loss. the text is hard to read, can you increase the font?

set of test class embeddings, as defined by:

$$F(x) = \underset{y \in \mathcal{U}}{\operatorname{argmin}}\, d\left(f_\theta(x), \psi(y)\right), \tag{1}$$

where d is a distance metric (e.g. cosine distance).

We argue that this two stage approach - metric learning on the semantic space and nearest neighbor classification - is ineffective. Instead, we reformulate the ZSAR problem to learn a scoring function f_θ which predicts a match vs. no-match probability when given a video and semantic embedding pair, i.e. $f_\theta : \mathcal{X} \times \mathbb{R}^D \rightarrow [0, 1]$. Once the network is trained, the final action classification can be obtained by selecting the class which achieves the highest probability:

$$F(x) = \underset{y \in \mathcal{U}}{\operatorname{argmax}}\, f_\theta\left(x, \psi(y)\right). \tag{2}$$

This formulation allows for multi-label action recognition by selecting all classes with probabilities over the threshold τ, i.e.

$$F(x) = \{y \in \mathcal{U} | f_\theta\left(x, \psi(y)\right) > \tau\}, \tag{3}$$

whereas nearest neighbor classification can not predict multiple semantically dissimilar actions to occur within a given video.

3.2 Proposed ZSAR Framework

Our proposed network architecture is illustrated in Figure 2. Here, we describe the different components of our architecture.

Video and Text Encoders Given a video clip $x \in \mathbb{R}^{T \times H \times W}$ of T frames with a height and width of H and T respectively, we learn a 3D-CNN [20, 31], g_v, to extract a video feature representation, $g_v(x) \in \mathbb{R}^{D_v}$. In this work, we obtain the semantic embedding (text encoding), $\psi(y)$ by passing the action class name through a fixed pre-trained text encoder. Unless otherwise stated, a Word2Vec embedding is created for each word and average the embeddings over all words in the action name to obtain a 300 dimensional text feature representation, $\psi(y) \in \mathbb{R}^{300}$. We also present results with the more recent Sent2Vec text encoder in Section 4.4.

Refining Text Embedding Since text encoders are trained on large text corpora, they tend to lack information about visual attributes of actions. For example, "running water" and "person running" are visually distinct, but embedding for the word "running" is the same for both. To remedy this, we propose a module, g_t, which refines, or fine-tunes, the text encodings to learn vision-specific representations and generates a new text representation with dimension D_t: $g_t(\psi(y)) \in \mathbb{R}^{D_t}$

Merging Features and Scoring With the extracted visual features and refined textual features, we need to determine whether or not the inputs match. We first merge the features to obtain a single representation for the pair of inputs, $m\left(g_v\left(x\right), g_t\left(\psi\left(y\right)\right)\right) \in \mathbb{R}^{D_m}$.

Once merged, the joint feature representation can be passed through an MLP, g_{cls}, to obtain classification logits:

$$f_{\text{logits}}\left(x, \psi\left(y\right)\right) = g_{\text{cls}}\left(m\left(g_v\left(x\right), g_t\left(\psi\left(y\right)\right)\right)\right). \tag{4}$$

Then, final probability score can be obtained by using a softmax operation across all classes:

$$P\left(y|x\right) = f_\theta\left(x, \psi\left(y\right)\right) = \frac{\exp\left(f_{\text{logits}}\left(x, \psi\left(y\right)\right)\right)}{\sum\limits_{y' \in \mathcal{S}} \exp\left(f_{\text{logits}}\left(x, \psi\left(y'\right)\right)\right)}. \tag{5}$$

The final probability scores can then be used for either single-label or multi-label classification following equations 2 and 3, respectively.

Training Procedure We train the network in an end-to-end manner using cross-entropy loss. When training on a single-label dataset, we compute the loss

$$\mathcal{L} = -\frac{1}{B}\sum_{i=1}^{B} \log P\left(y_i|x_i\right), \tag{6}$$

on a mini-batch of samples $B = \{\left(x_1, y_1\right), ..., \left(x_K, y_K\right)\}$. When training on multi-label data, which is the case for our experiments on the MEVA dataset, the softmax activation is replaced with sigmoid so that each probability is independent and binary-cross entropy loss is used.

4 Experimental Evaluation

Implementation Details For our experiments, the video encoder is the PyTorch [32] implementation of the R(2+1)D-18 [31] network. This network outputs a visual embedding dimension of $D_v = 512$ for each 16-frame video clip. As with previous work [4, 33] we average predictions over 25 clips per video at test time. Unless stated otherwise, the text encoder is a pretrained Word2Vec [21] model with max-pooling over words, resulting in a 300-dimensional text embeddings. We also present results using the Sent2Vec [29] model, which is pre-trained on twitter unigrams and results in a 700-dimensional embedding for a given sequence of words. Our refining module consists of a learned 3-layer MLP with hidden dimensions of 1024 and ReLU activations, and a final output dimension of $D_t = 600$. The output is passed through a sigmoid activation to obtain an embedding in the range $[0, 1]$. The loss of our model is minimized using the Adam optimizer [34] with a starting learning rate of 1e-3 and a batch size of 114. The model is trained for 50 epochs with a learning rate decrease by a factor of 10 at epoch 30. All experiments are performed on two of Nvidia Tesla V100 GPUs.

Training Dataset We train our models on the Kinetics 700 [35] action recognition dataset. Following [4], we ensure that these experiments remain true zero-shot tasks by filtering out classes from Kinetics that are not sufficiently different than our testing classes. This results in 545,317 training videos consisting of 662 action classes[1]. Additionally, we compare our system to [4] pre-trained on the SUN Scene Categorization dataset. [36]

4.1 Single-label Action Recognition

Evaluation Datasets We evaluate on the UCF-101 [37], HMDB [38], and RareAct [39] dataests. UCF101 has 101 action classes with a focus on sports-based actions across 13320 videos taken from YouTube. HMDB has 51 human focused actions based around sports and everyday activities across 6767 videos sourced from commercial areas as well as YouTube. RareAct is a video dataset containing unusual actions such as "blend phone", "cut keyboard", and "microwave shoes". It contains 905 videos with 122 different actions created by combining rarely co-occuring action verb pairs.

[1] It should be noted that [4] trains on 664 classes, but due to differences in dataset versions (i.e. changed action names) we have 2 fewer classes for training.

Evaluation Protocols To compare with previous ZSAR methods, we use two evaluation protocols on UCF-101 and HMDB. The first, proposed in [4], involves testing on all videos from each dataset. The second involves randomly selecting and evaluating on half of the actions from a dataset (50 for UCF-101 and 25 for HMDB). This is repeated 10 times and the averaged results are reported[2]. Since RareAct is composed of "positive", "negative", and "hard negative" samples, we consider only positive clips; we follow the first evaluation protocol and evaluate on all 1765 positive video samples.

Comparison with State-of-the-art Methods For the first evaluation protocol, we compare to URL [2] and Bratolli *et al.* [4]. The results are presented in Table 1. Our approach outperforms the previous state-of-the-art methods by on both datasets, with a large improvement in Top-5 accuracy (3.8% and 5.9% improvements on UCF-101 and HMDB, respectively). Additionally, our system improves on previous systems when pretrained on SUN, with top-1 accuracy increasing by 3.4% and 3.9% on Top-1 and Top-5 accuracy respectively. We also observe this performance improvement when compared to other previous ZSAR methods using the second evaluation protocol in Table 2. The RareAct dataset presents a challenging benchmark for zero-shot action classification because the actions are drastically different than those used during training. Again, we find that our approach outperforms the strongest baseline with a 2.1% improvement on Top-1 accuracy and 8% improvement in Top-5 accuracy.

4.2 Multi-label Action Recognition on AVA

Evaluation Dataset The Atomic Visual Actions (AVA) dataset [40] annotates 80 atomic visual actions in 340 15-minute video clips. All people in each video are exhaustively annotated at a rate of one frame-per-second, and each person can perform multiple actions at once. We present results on the validation set which contains 64 videos split into 54k one-second clips.

Evaluation Protocol Since action localization (i.e. predicting bounding-box localizations for all actors in a video) is out of scope for this work, we evaluate only our the action recognition capabilities on the AVA dataset. To this end, we extract video clips centered on each actor's ground-truth bounding-box, and pass these through the ZSAR model to obtain class predictions. For fair comparison with [4], we generate multiple predictions using several strategies which are outlined in the Supplemental Material. Ultimately, selecting all classes using a threshold on the distance from predictions to the text embedding leads to best scores, which are reported in this work. The resulting predictions are then used to compute the f-mAP metric as well as the standard multi-label classification metric F1-score.

As previous methods were not designed with multi-label action recognition, these systems must be modified to allow for comparison; specifically, to compute the mAP metric they must predict confidence scores for their final classifications. We take the method [4] and obtain a confidence score for each class by computing the softmax over the inverse cosine distances between the video encoding and the classes' textual encoding. As most resultant distances are relatively close, we scale them by a factor of 10 prior to use in the softmax. For final class predictions, we follow equation 3, which we find leads to the best results for the baseline[3].

Results We present results on the AVA dataset in Table 3. We find that, when using the same Word2Vec text encoder, our model outperforms previous approaches when modified for multi-label action classification in terms of F1-score. This improvement is more noticable when using Sent2Vec as the text encoder - we achieve a 0.6% improvement in terms of mAP and a 2.3% improvement in F1-score.

4.3 Real-world Action Recognition on MEVA

Dataset So far, the previous evaluation datasets have been curated to contain specific action classes. Also, unseen classes are identified by class names, rather than natural language sentences, which is not ideal for real-world applications. To demonstrate our approach's ability to deal with real-world

[2]This evaluation protocol is greatly influenced by the random seed used to generate the splits. We discuss this further in the Supplementary Materials.

[3]We include various methods for obtaining confidence scores and final class predictions in the Supplementary Materials

Table 1: Evaluation on all classes of UCF-101 and HMDB datasets.

	UCF-101		HMDB		RareAct	
Method	Top-1	Top-5	Top-1	Top-5	Top-1	Top-5
URL[2]	34.2	-	-	-	-	-
Brattoli *et al.* [4]	37.6	62.5	26.9	49.8	9.4	24.8
Brattoli *et al.* (SUN Pretraining) [4]	39.8	65.6	-	-	-	-
PS-ZSAR (ours)	**40.1**	**66.3**	**27.3**	**55.7**	**11.5**	**32.8**
PS-ZSAR (SUN Pretraining)	**43.2**	**69.5**	**29.5**	**58.1**	**12.2**	**34.4**

Table 2: Evaluation on UCF-101 and HMDB-51 datasets. Accuracies are the average of 10 random splits each with 50% of the classes.

	UCF101	HMDB
DataAug [2]	18.3	19.7
InfDem [43]	17.8	21.3
BiDrectional [8]	21.4	18.9
FairZSL [44]	-	23.1
TARN [15]	19.0	23.5
Action2Vec [3]	22.1	23.5
Brattoli *et al.*[4]	48.0	32.7
PS-ZSAR (ours)	49.2	33.8

scenario, we train and evaluate on the Multiview Extended Video with Activities (MEVA) dataset [41]. This dataset consists 9300 hours of untrimmed video collected from multiple viewpoints and scenes. For 144 hours of video, bounding-box annotations are present for actors performing 37 possible activities. Each actor can perform multiple actions at once and *each activity has detailed natural language descriptions*, which is beneficial for learning ZSAR models. The data is split into 22 hours for training and 122 hours are sequestered for the NIST Activity in Extended Video (ActEV) challenge. This challenge has a "Surprise Activity" task, which involves classifying previously unseen classes (i.e. classes not within the annotated 37 activities) from natural language descriptions. As the test data is sequestered, *the number of unseen action categories as well as the number of instances are unknown.*

Training and Evaluation Protocol On this dataset, PS-ZSAR is trained using the natural language descriptions of the activities (rather than their names). Since these descriptions consist of full-length sentences, we use Sent2Vec as our text encoder. Evaluation is performed by submitting a system to the ActEV challenge website. Performance is evaluated the probability of missed detection at fixed time-based false alarm per minute ($P_{miss}@T_{FA}$). The time-based false alarm per minute is set to 0.02 and 0.04 (i.e. $P_{miss@0.02}T_{FA}$ and $P_{miss@0.04}T_{FA}$). We refer to MEVA SDL [42] for detailed explanations of the evaluations as well as evaluation code.

Results Our method achieves strong performance when compared with other submitted systems, as seen in Table 4. We achieve similar performance the leading method in terms of AUDC, but we greatly outperform all other systems on the $P_{miss}@T_{FA}$ metric. These experiments highlight our method's ability to scale to large amounts of real-world video data as well as its ability to leverage natural language activity descriptions for the ZSAR task.

4.4 Ablations

We perform several ablations on the UCF-101 and HMDB datasets to evaluate various components of our network.

Refining Module We evaluate the importance fine-tuning the textual features during training. We first remove the refining module, and merge the semantic embedding, $\psi(y)$, with the visual features.

Table 3: Multi-label action recognition evaluation on the AVA Dataset. w2v indicates Word2Vec is used as the text encoder; s2v indicates Sent2Vec is used.

	Text Enc.	mAP	F1-score
Brattoli *et al.* [4]	w2v	6.4	10.0
PS-ZSAR (ours)	w2v	6.5	11.4
PS-ZSAR (ours)	s2v	**7.0**	**12.3**
Supervised (I3D) [45]	-	23.4	-

Table 4: Results from the MEVA Sequestered Data Leaderboard. For both metrics, lower score is better.

	$P_{miss@0.02}T_{FA}$	$P_{miss@0.04}T_{FA}$
IBM-Purdue	0.8898	0.8176
CMU-DIVA	0.8795	0.8044
Purdue	0.8537	0.7617
UMCMU	0.8724	0.8009
PS-ZSAR	0.**7752**	0.**6686**

Table 5: Ablation on Refining Module.

Dataset	UCF-101		HMDB	
	Top-1	Top-5	Top-1	Top-5
No Refining	32.0	58.5	18.9	45.6
Single layer	36.3	64.2	23.7	50.1
Full Model	**40.1**	**66.3**	**27.3**	**55.7**

Table 6: Ablation on how modalities are merged.

Dataset	UCF-101		HMDB	
	Top-1	Top-5	Top-1	Top-5
Concat.	34.4	60.6	21.3	47.7
Add.	35.1	62.6	24.0	51.6
Mult.	**40.1**	**66.3**	**27.3**	**55.7**

This results in a Top-1 accuracy of 32.0% and 18.9% on UCF-101 and HMDB, respectively. Next, we use a single dense layer of size 1024 before merging features;his improves performance by 4.3% on UCF-101 and 5.7% on HMDB. Finally, we use our full 3-layer refining module which outputs a new textual encoding. We find that our this leads to the best results with accuracies of 40.1% on UCF-101 and 27.3% on HMDB. This suggests that a single linear transformation (i.e. single dense layer) is insufficient to learn the visual semantics for given action classes, and a deeper refining module is required.

Modality Merging To determine the most effective technique for combining video and textual features, we use three common methods: multiplication, addition, and concatenation. For these experiments, all other components of the network remain unchanged while varying the merging method. We find that addition and concatenation perform similarly, but multiplication substantially outperforms them with a 5% improvement on UCF-101 and 3.3% improvement on HMDB.

Importance of the Textual Encoder Traditionally, ZSAR methods are trained using a Word2Vec encoder with max-pooling over the words of an action name. Pooling, however, can lead to loss of vital information. Newer text encoding methods like Sent2Vec or BERT [30] do not pool feature representation, but rather generate a single feature vector when given a sequence of words. We report scores on the UCF-101, HMDB, and RareAct datasets for various text encoders in Table 7. We find that for these datasets, Word2Vec tends to outperform these sentence based encoders; this can be attributed to the fact that the class names used in these datasets consist of a few words (the majority of classes are fewer than 2 words) so the max-pooling operation used with Word2Vec has minimal negative effect. This is supported by our experiments on the MEVA dataset. On MEVA, we find that Sent2Vec outperforms Word2Vec+Pooling since natural language descriptions are used to describe the action classes.

Table 7: Ablation on different textual encoders.

Dataset	UCF-101		HMDB		RareAct	
	Top-1	Top-5	Top-1	Top-5	Top-1	Top-5
Word2Vec	**40.1**	**66.3**	**27.3**	**55.7**	**11.5**	**32.8**
Sent2Vec	39.7	65.4	23.9	51.2	7.3	22.7
BERT	31.8	58.9	22.2	45.6	8.3	22.9

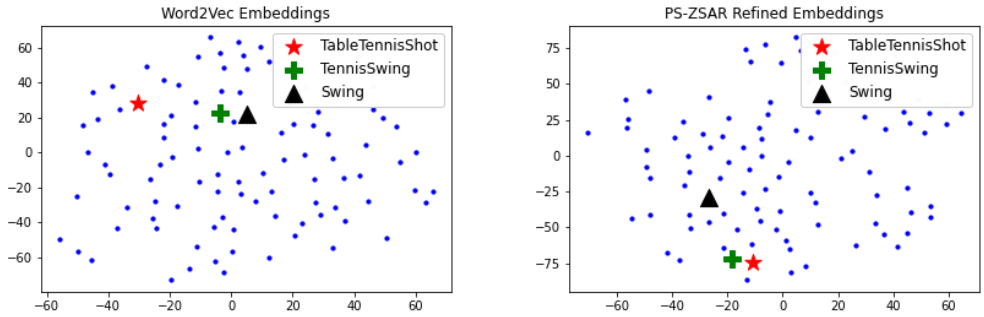

Figure 3: A comparison of the texual embeddings of UCF-101 classes of the previous method [4] and PS-ZAR, reduced to 2-dimensions via t-SNE. "Swing" and "Tennis Swing" both contain the word "Swing", and therefore averaging of Word2Vec embeddings falsely associates the two, while the more visually similar "Table Tennis Shot" class is further away. In PS-ZAR, the more visually similar classes are grouped closer together in the embedding space.

Ground-truth	Brattoli *et al.*	PS-ZSAR
Stand	1) Close a door	1) Stand
Carry an object	2) Stand	2) Carry an Object
Throw	3) Read	3) Throw
Listen to a person	4) Walk	4) Bend at the waist

Ground-truth	Brattoli *et al.*	PS-ZSAR
Sit	1) Write	1) Sit
Touch an object	2) Listen to a person	2) Write
Write	3) Talk to a person	3) Talk to a person

Ground-truth	Brattoli *et al.*	PS-ZSAR
Sit	1) Smoke	1) Talk to a person
Listen to (a person)	2) Listen to (a person)	2) Listen to (a person)
Talk to a person	3) Fall Down	3) Listen to music

Ground-truth	Brattoli *et al.*	PS-ZSAR
Walk	1) Carry an object	1) Talk to a person
Talk to a person	2) Walk	2) Walk
Carry an object	3) Open	3) Carry an Object

Figure 4: Qualitative results on multi-label samples from the AVA dataset for PS-ZSAR and the state-of-the-art baseline [4]. Our proposed approach is able predict semantically distinct classes, which leads to improved multi-label accuracy.

4.5 Analysis

Improved Textual Embeddings We first analyse the text representations generated by our refining module. We present a t-SNE [46] visualization of the Word2Vec encodings and the refined encodings in Figure 3. We find that the representations are changed based on the visual semantics of the given action class. For example, the original Word2Vec embedding for the action "Tennis Swing" is closer to the action "Swing" (i.e. child on a swing) than the action "Table Tennis Shot" which is visually more similar. Our refining module, however, learns to bring "Tennis Swing" and "Table Tennis Shot" closer together in the feature space.

Predicting Multiple Actions We argue that previous nearest-neighbor based ZSAR approaches are ineffective when dealing with multi-label data since semantically distinct actions cannot be predicted together. We show some qualitative results to this effect in Figure 4 - for a given video we compare the top-5 predictions for the method [4] and our approach. We observe that our method successfully predicts semantically dissimilar classes while the previous approach can only predict classes which are similar.

5 Conclusion

In this work, we reformulate zero-shot action recognition such that does not rely on nearest neighbor classification, but rather consists of a pairwise scoring function. Given a video and a set of action classes, our method predicts a set of probabilities for each class, allowing for semantically distinct classes to be predicted with high confidence. The proposed method improves on previous state-

of-the-art zero-shot action detection models. We explore the use of feature merging as opposed to simply learning on a static textual embedding space, as well as multiple textual encoding schemes that preserve semantic relationships. Our results highlight the need for zero-shot learning models to learn both visual and textual spaces to properly represent unseen classes. The PS-ZSAR method achieves state-of-the-art performance on 5 zero-shot action classification benchmarks including in the challenging multi-label dataset AVA. Finally, we demonstrate our approach's ability to deal with real-world surprise activity detection by providing results on the MEVA dataset.

References

[1] Valter Estevam, Helio Pedrini, and David Menotti. Zero-shot action recognition in videos: A survey. *Neurocomputing*, 439:159–175, 2021.

[2] Yi Zhu, Yang Long, Yu Guan, Shawn Newsam, and Ling Shao. Towards universal representation for unseen action recognition. In *Proceedings of the IEEE conference on computer vision and pattern recognition*, pages 9436–9445, 2018.

[3] Meera Hahn, Andrew Silva, and James M Rehg. Action2vec: A crossmodal embedding approach to action learning. *arXiv preprint arXiv:1901.00484*, 2019.

[4] Biagio Brattoli, Joseph Tighe, Fedor Zhdanov, Pietro Perona, and Krzysztof Chalupka. Rethinking zero-shot video classification: End-to-end training for realistic applications. In *Proceedings of the IEEE/CVF Conference on Computer Vision and Pattern Recognition*, pages 4613–4623, 2020.

[5] Ioannis Alexiou, Tao Xiang, and Shaogang Gong. Exploring synonyms as context in zero-shot action recognition. In *2016 IEEE International Conference on Image Processing (ICIP)*, pages 4190–4194. IEEE, 2016.

[6] Xun Xu, Timothy M Hospedales, and Shaogang Gong. Multi-task zero-shot action recognition with prioritised data augmentation. In *European Conference on Computer Vision*, pages 343–359. Springer, 2016.

[7] Xun Xu, Timothy Hospedales, and Shaogang Gong. Transductive zero-shot action recognition by word-vector embedding. *International Journal of Computer Vision*, 123(3):309–333, 2017.

[8] Qian Wang and Ke Chen. Zero-shot visual recognition via bidirectional latent embedding. *International Journal of Computer Vision*, 124(3):356–383, 2017.

[9] Yongqin Xian, Bernt Schiele, and Zeynep Akata. Zero-shot learning-the good, the bad and the ugly. In *Proceedings of the IEEE Conference on Computer Vision and Pattern Recognition*, pages 4582–4591, 2017.

[10] Devraj Mandal, Sanath Narayan, Sai Kumar Dwivedi, Vikram Gupta, Shuaib Ahmed, Fahad Shahbaz Khan, and Ling Shao. Out-of-distribution detection for generalized zero-shot action recognition. In *Proceedings of the IEEE/CVF Conference on Computer Vision and Pattern Recognition*, pages 9985–9993, 2019.

[11] Xingyu Chen, Xuguang Lan, Fuchun Sun, and Nanning Zheng. A boundary based out-of-distribution classifier for generalized zero-shot learning. In *European Conference on Computer Vision*, pages 572–588. Springer, 2020.

[12] William Thong and Cees GM Snoek. Bias-awareness for zero-shot learning the seen and unseen. *arXiv preprint arXiv:2008.11185*, 2020.

[13] Jiamin Wu, Tianzhu Zhang, Zheng-Jun Zha, Jiebo Luo, Yongdong Zhang, and Feng Wu. Self-supervised domain-aware generative network for generalized zero-shot learning. In *Proceedings of the IEEE/CVF Conference on Computer Vision and Pattern Recognition*, pages 12767–12776, 2020.

[14] Shaobo Min, Hantao Yao, Hongtao Xie, Chaoqun Wang, Zheng-Jun Zha, and Yongdong Zhang. Domain-aware visual bias eliminating for generalized zero-shot learning. In *Proceedings of the IEEE/CVF Conference on Computer Vision and Pattern Recognition*, pages 12664–12673, 2020.

[15] Mina Bishay, Georgios Zoumpourlis, and Ioannis Patras. Tarn: Temporal attentive relation network for few-shot and zero-shot action recognition. *arXiv preprint arXiv:1907.09021*, 2019.

[16] Chuang Gan, Ming Lin, Yi Yang, Gerard Melo, and Alexander G Hauptmann. Concepts not alone: Exploring pairwise relationships for zero-shot video activity recognition. In *Proceedings of the AAAI Conference on Artificial Intelligence*, volume 30, 2016.

[17] AJ Piergiovanni and Michael S Ryoo. Learning shared multimodal embeddings with unpaired data. *CoRR*, 2018.

[18] Bowen Zhang, Hexiang Hu, and Fei Sha. Cross-modal and hierarchical modeling of video and text. In *Proceedings of the European Conference on Computer Vision (ECCV)*, pages 374–390, 2018.

[19] Kaiming He, Xiangyu Zhang, Shaoqing Ren, and Jian Sun. Deep residual learning for image recognition. In *Proceedings of the IEEE conference on computer vision and pattern recognition*, pages 770–778, 2016.

[20] Du Tran, Lubomir Bourdev, Rob Fergus, Lorenzo Torresani, and Manohar Paluri. Learning spatiotemporal features with 3d convolutional networks. In *Proceedings of the IEEE international conference on computer vision*, pages 4489–4497, 2015.

[21] Tomas Mikolov, Kai Chen, Greg Corrado, and Jeffrey Dean. Efficient estimation of word representations in vector space. *arXiv preprint arXiv:1301.3781*, 2013.

[22] Qiang Qiu, Zhuolin Jiang, and Rama Chellappa. Sparse dictionary-based representation and recognition of action attributes. In *2011 International Conference on Computer Vision*, pages 707–714. IEEE, 2011.

[23] Jingen Liu, Benjamin Kuipers, and Silvio Savarese. Recognizing human actions by attributes. In *CVPR 2011*, pages 3337–3344. IEEE, 2011.

[24] Chuang Gan, Ming Lin, Yi Yang, Yueting Zhuang, and Alexander G Hauptmann. Exploring semantic inter-class relationships (sir) for zero-shot action recognition. In *Proceedings of the AAAI Conference on Artificial Intelligence*, volume 29, 2015.

[25] Chung-Wei Lee, Wei Fang, Chih-Kuan Yeh, and Yu-Chiang Frank Wang. Multi-label zero-shot learning with structured knowledge graphs. In *Proceedings of the IEEE conference on computer vision and pattern recognition*, pages 1576–1585, 2018.

[26] Dat Huynh and Ehsan Elhamifar. A shared multi-attention framework for multi-label zero-shot learning. In *Proceedings of the IEEE/CVF Conference on Computer Vision and Pattern Recognition*, pages 8776–8786, 2020.

[27] He Huang, Yuanwei Chen, Wei Tang, Wenhao Zheng, Qing-Guo Chen, Yao Hu, and Philip Yu. Multi-label zero-shot classification by learning to transfer from external knowledge. *arXiv preprint arXiv:2007.15610*, 2020.

[28] Qian Wang and Ke Chen. Multi-label zero-shot human action recognition via joint latent ranking embedding. *Neural Networks*, 122:1–23, 2020.

[29] Mahdi Naser Moghadasi and Yu Zhuang. Sent2vec: A new sentence embedding representation with sentimental semantic. In *2020 IEEE International Conference on Big Data (Big Data)*, pages 4672–4680. IEEE, 2020.

[30] Nils Reimers and Iryna Gurevych. Sentence-bert: Sentence embeddings using siamese bert-networks. *arXiv preprint arXiv:1908.10084*, 2019.

[31] Du Tran, Heng Wang, Lorenzo Torresani, Jamie Ray, Yann LeCun, and Manohar Paluri. A closer look at spatiotemporal convolutions for action recognition. In *Proceedings of the IEEE conference on Computer Vision and Pattern Recognition*, pages 6450–6459, 2018.

[32] Adam Paszke, Sam Gross, Soumith Chintala, Gregory Chanan, Edward Yang, Zachary DeVito, Zeming Lin, Alban Desmaison, Luca Antiga, and Adam Lerer. Automatic differentiation in pytorch. 2017.

[33] Limin Wang, Yuanjun Xiong, Zhe Wang, Yu Qiao, Dahua Lin, Xiaoou Tang, and Luc Van Gool. Temporal segment networks: Towards good practices for deep action recognition. In *European conference on computer vision*, pages 20–36. Springer, 2016.

[34] Diederik P Kingma and Jimmy Ba. Adam: A method for stochastic optimization. *arXiv preprint arXiv:1412.6980*, 2014.

[35] Joao Carreira, Eric Noland, Chloe Hillier, and Andrew Zisserman. A short note on the kinetics-700 human action dataset. *arXiv preprint arXiv:1907.06987*, 2019.

[36] Jianxiong Xiao, James Hays, Krista A Ehinger, Aude Oliva, and Antonio Torralba. Sun database: Large-scale scene recognition from abbey to zoo. In *2010 IEEE computer society conference on computer vision and pattern recognition*, pages 3485–3492. IEEE, 2010.

[37] Khurram Soomro, Amir Roshan Zamir, and Mubarak Shah. Ucf101: A dataset of 101 human actions classes from videos in the wild. *arXiv preprint arXiv:1212.0402*, 2012.

[38] Hildegard Kuehne, Hueihan Jhuang, Estíbaliz Garrote, Tomaso Poggio, and Thomas Serre. Hmdb: a large video database for human motion recognition. In *2011 International conference on computer vision*, pages 2556–2563. IEEE, 2011.

[39] Antoine Miech, Jean-Baptiste Alayrac, Ivan Laptev, Josef Sivic, and Andrew Zisserman. Rareact: A video dataset of unusual interactions. *arXiv preprint arXiv:2008.01018*, 2020.

[40] Chunhui Gu, Chen Sun, David A Ross, Carl Vondrick, Caroline Pantofaru, Yeqing Li, Sudheendra Vijayanarasimhan, George Toderici, Susanna Ricco, Rahul Sukthankar, et al. Ava: A video dataset of spatio-temporally localized atomic visual actions. In *Proceedings of the IEEE Conference on Computer Vision and Pattern Recognition*, pages 6047–6056, 2018.

[41] Kellie Corona, Katie Osterdahl, Roderic Collins, and Anthony Hoogs. Meva: A large-scale multiview, multimodal video dataset for activity detection. In *Proceedings of the IEEE/CVF Winter Conference on Applications of Computer Vision (WACV)*, pages 1060–1068, January 2021.

[42] Kitware inc, the multiview extended video with activities (meva) dataset.

[43] Hugo Larochelle, Dumitru Erhan, and Yoshua Bengio. Zero-data learning of new tasks. In *AAAI*, volume 1, page 3, 2008.

[44] Alina Roitberg, Manuel Martinez, Monica Haurilet, and Rainer Stiefelhagen. Towards a fair evaluation of zero-shot action recognition using external data. In *Proceedings of the European Conference on Computer Vision (ECCV) Workshops*, pages 0–0, 2018.

[45] Rohit Girdhar, Joao Carreira, Carl Doersch, and Andrew Zisserman. Video action transformer network. In *Proceedings of the IEEE/CVF Conference on Computer Vision and Pattern Recognition*, pages 244–253, 2019.

[46] Laurens Van der Maaten and Geoffrey Hinton. Visualizing data using t-sne. *Journal of machine learning research*, 9(11), 2008.