# FEDERATED LEARNING FOR LOCAL AND GLOBAL DATA DISTRIBUTION

**Anonymous authors**
Paper under double-blind review

## ABSTRACT

Existing research in Federated Learning focuses on synthetic or small-scale datasets, with in-house distribution posing challenges for long-term real world use-cases. We propose a novel approach that maximizes in-house (local) distribution gains while focusing on generalization. Experimental results on several datasets demonstrates the efficacy of the proposed approach.

## 1 INTRODUCTION

Federated Learning (FL) offers a solution to train machine learning models in a distributed manner without sacrificing data privacy. However, a major limitation of FL is that in cases where the data is not independently and identically distributed (also called non-IID) across clients, the global model does not perform well for clients' local datasets Li et al. (2019); Sattler et al. (2019); Shoham et al. (2019); Varno et al. (2022); Jhunjhunwala et al. (2022). To address this, in-house distribution or local adaptation techniques have been proposed which tune the global model to perform better on individual clients' local data Deng et al. (2020); T Dinh et al. (2020); Li et al. (2021); Ozkara et al. (2021); Hao et al. (2021); Huang et al. (2021); Sun et al. (2021); Ma et al. (2022); Tan et al. (2022). If this process is not regularized then we run the risk of creating biased models that excessively accommodate the client's distribution at the time of training and do not generalize well to the overall problem domain Abay et al. (2020); Zhang et al. (2020). This research proposes an approach for FL that balances in-house (local) distribution and generalization to mitigate this risk. The proposed Local and Global Federated Learning (LGFL) algorithm is evaluated on three databases.

## 2 LOCAL AND GLOBAL FEDERATED LEARNING

Current in-house distribution techniques create biased models by tuning them for the participant's data distribution that may sacrifice performance on unseen data. We propose that the success criteria of each local model should be two-fold: i) provide better performance on the local data than a model that could have been trained without FL, i.e., **in-house distribution** and ii) ensure that the local model is not skewed and generalizes well to the overall problem domain, i.e., **generalization**. As discussed earlier, existing local adaptation algorithms have focused exclusively and extensively on addressing (i) but have not considered or evaluated (ii) which is the focus of the proposed approach. In-house distribution in federated learning can be easily defined as the performance of a model on a client's local test data. We define generalization performance as the performance of the model on a large amount of unseen test data from other clients. Due to the non-IID nature of the client-level data distribution, this ensures that the model is evaluated on a large dataset that will include data points from many different feature subspaces.

### 2.1 PROPOSED LGFL ALGORITHM

FL begins with an initial global model, $M_0^s$, that is sent to each client $C_i$, trained locally on the client's training data $D_{train}^{C_i}$, and weights of the learned model are sent to the server. It aggregates these weights and creates the next iteration of the global model, $M_1^s$. This process is repeated $N$ times, and the final global model $M^s$ is created. Clients then personalize $M^s$ and create a personalized model $M_i^c$ for each client $C_i$.

In the proposed LGFL algorithm, we leverage a peer-review mechanism. After training a personalized model, $M_{Ci}$, each client $C_i$ sends the model to reviewing clients that provide a performance metric for the model on their data back to $C_i$ as their feedback score. Client $C_i$ can then stop the

**Algorithm 1** CE: Proposed client election algorithm

Let server have weight updates $\delta_i$ sent by each client $C_i$
**for** each participating client $C_i$ **do**
  **for** each participating client $C_j$ **do**
    **if** $i \neq j$ **then**
      Compute similarity metric $S_{ij} = \phi(\delta_i, \delta_j)$ where $\phi$ is a similarity metric function
    **end if**
  **end for**
  Sort clients based on ascending $S_{ij}, \forall j \neq i$
  Select top $N'_{cr}$ clients based on sorted $S_{ij}$ and reviewer agreement such that $N'_{cr} < N_{cr}$
**end for**

process if the metrics are satisfactory or continue the process and send the next iteration of the model for review again until it converges. In this process, let $M_{Ci}$ be the number of clients reviewing the model in a given review cycle by $N_{cr}$, then the updated optimization criteria for client $C_i$ becomes $\arg\max \alpha\rho(M_{Ci}, D_i) + \beta\gamma(M_{Ci}, D_{cr})$. Here $\alpha$ and $\beta$ represent weights that can control how much these two factors are considered in the training process with larger weights of $\beta$ representing more focus on preserving generalization performance while larger values of $\alpha$ allow more emphasis on improving in-house distribution performance.

To select clients efficiently instead of randomly selecting a large number of attendees, we propose client election ('**CE**') shown in Algorithm 1. The server can determine the similarity between clients' data by comparing them using a layer-wise cosine similarity metric before the final round of training, allowing the client to send out review requests while considering this ranking and reducing communication costs by using fewer clients.

## 3 Experimental Analysis

We conduct experiments on three databases: CIFAR-10 Krizhevsky (2012), CIFAR-100 Krizhevsky (2012), and FairFace Karkkainen & Joo (2021). For all these databases, we first create non-IID splits such that the data distribution varies across clients in order to emulate a practical scenario.

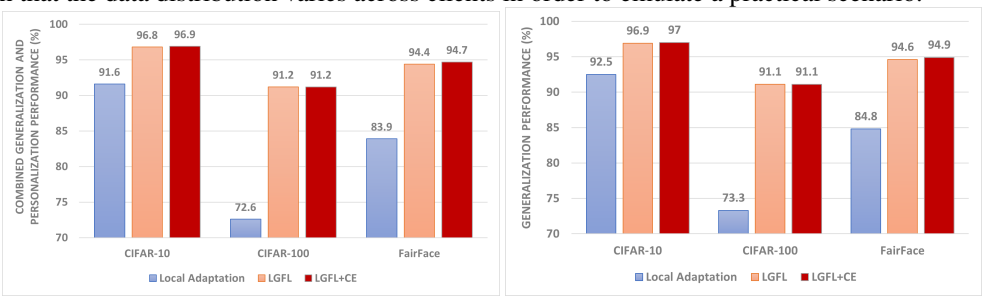


Figure 1: (left) Combined Local and Global evaluation results on the three databases. (right) Generalization performance is relative to the global model baseline, i.e., 100% generalization performance matches the global model. By using LGFL+CE, we are able to achieve up to $\mathbf{14.9}$% best-case generalization performance gain over local adaptation (LA).

Figure 1 presents the combined generalization and in-house distribution results on the three databases. The proposed LGFL+CE algorithm achieves up to 18.6% improved combined performance. The key takeaway is that the proposed LGFL algorithm provides guardrails to the applied in-house distribution algorithm (Local Adaptation in this case) and ensures that improvement in in-house distribution does not come at the cost of sacrificing the generalizability of the model. It functions with any FL/in-house distribution algorithm and therefore achieving higher in-house distribution performance is possible by utilizing better core models.

## 4 Conclusion

We proposed a novel approach for FL that allows leveraging gains from in-house distribution while keeping generalization in focus. Our proposed LGFL algorithm showed promising results on three databases and offers exciting research opportunities for the community.

### URM STATEMENT

The authors acknowledge that at least one key author of this work meets the URM criteria of the ICLR 2023 Tiny Papers Track.

## REFERENCES

Annie Abay, Yi Zhou, Nathalie Baracaldo, Shashank Rajamoni, Ebube Chuba, and Heiko Ludwig. Mitigating bias in federated learning. *arXiv preprint arXiv:2012.02447*, 2020.

Yuyang Deng, Mohammad Mahdi Kamani, and Mehrdad Mahdavi. Adaptive personalized federated learning, 2020.

Weituo Hao, Mostafa El-Khamy, Jungwon Lee, Jianyi Zhang, Kevin J Liang, Changyou Chen, and Lawrence Carin Duke. Towards fair federated learning with zero-shot data augmentation. In *Proceedings of the IEEE/CVF Conference on Computer Vision and Pattern Recognition*, pp. 3310–3319, 2021.

Yutao Huang, Lingyang Chu, Zirui Zhou, Lanjun Wang, Jiangchuan Liu, Jian Pei, and Yong Zhang. Personalized cross-silo federated learning on non-iid data. In *Proceedings of the AAAI Conference on Artificial Intelligence*, volume 35, pp. 7865–7873, 2021.

Divyansh Jhunjhunwala, Pranay Sharma, Aushim Nagarkatti, and Gauri Joshi. Fedvarp: Tackling the variance due to partial client participation in federated learning. In *Uncertainty in Artificial Intelligence*, pp. 906–916. PMLR, 2022.

Kimmo Karkkainen and Jungseock Joo. Fairface: Face attribute dataset for balanced race, gender, and age for bias measurement and mitigation. In *Proceedings of the IEEE/CVF Winter Conference on Applications of Computer Vision*, pp. 1548–1558, 2021.

Alex Krizhevsky. Learning multiple layers of features from tiny images. *University of Toronto*, 05 2012.

Tian Li, Shengyuan Hu, Ahmad Beirami, and Virginia Smith. Ditto: Fair and robust federated learning through personalization. In *International Conference on Machine Learning*, pp. 6357–6368. PMLR, 2021.

Xiang Li, Kaixuan Huang, Wenhao Yang, Shusen Wang, and Zhihua Zhang. On the convergence of fedavg on non-iid data. *arXiv preprint arXiv:1907.02189*, 2019.

Xiaosong Ma, Jie Zhang, Song Guo, and Wenchao Xu. Layer-wised model aggregation for personalized federated learning. In *Proceedings of the IEEE/CVF Conference on Computer Vision and Pattern Recognition (CVPR)*, pp. 10092–10101, June 2022.

Kaan Ozkara, Navjot Singh, Deepesh Data, and Suhas Diggavi. Quped: Quantized personalization via distillation with applications to federated learning. *Advances in Neural Information Processing Systems*, 34, 2021.

Felix Sattler, Simon Wiedemann, Klaus-Robert Müller, and Wojciech Samek. Robust and communication-efficient federated learning from non-iid data. *IEEE transactions on neural networks and learning systems*, 2019.

Neta Shoham, Tomer Avidor, Aviv Keren, Nadav Israel, Daniel Benditkis, Liron Mor-Yosef, and Itai Zeitak. Overcoming forgetting in federated learning on non-iid data. *arXiv preprint arXiv:1910.07796*, 2019.

Peng Sun, Haoxuan Che, Zhibo Wang, Yuwei Wang, Tao Wang, Liantao Wu, and Huajie Shao. Pain-fl: Personalized privacy-preserving incentive for federated learning. *IEEE Journal on Selected Areas in Communications*, 39(12):3805–3820, 2021.

Canh T Dinh, Nguyen Tran, and Tuan Dung Nguyen. Personalized federated learning with moreau envelopes. *Advances in Neural Information Processing Systems*, 33, 2020.

Alysa Ziying Tan, Han Yu, Lizhen Cui, and Qiang Yang. Towards personalized federated learning. *IEEE Transactions on Neural Networks and Learning Systems*, pp. 1–17, 2022.

Farshid Varno, Marzie Saghayi, Laya Rafiee, Sharut Gupta, Stan Matwin, and Mohammad Havaei. Minimizing client drift in federated learning via adaptive bias estimation. *arXiv preprint arXiv:2204.13170*, 2022.

Daniel Yue Zhang, Ziyi Kou, and Dong Wang. Fairfl: A fair federated learning approach to reducing demographic bias in privacy-sensitive classification models. In *2020 IEEE International Conference on Big Data (Big Data)*, pp. 1051–1060. IEEE, 2020.

## A Appendix

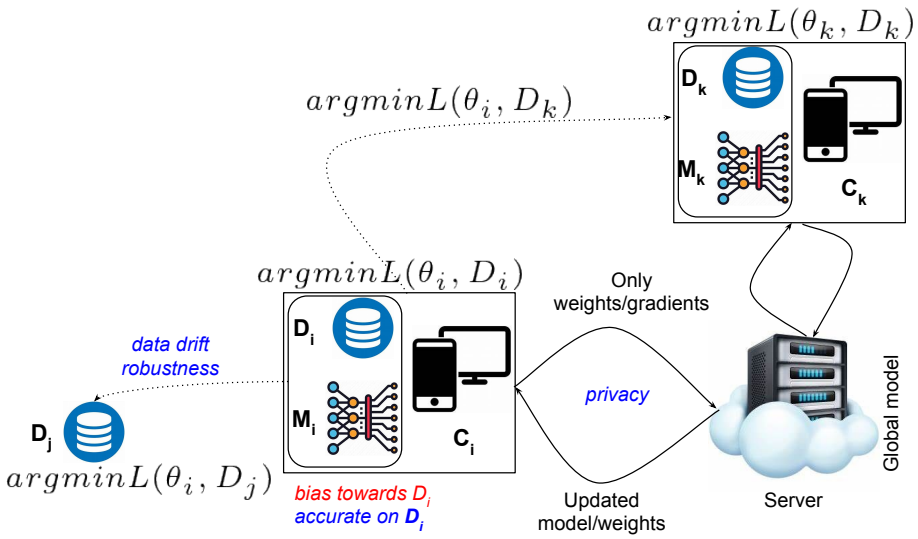


Figure 2: LGFL: Local and Global Federated Learning. $C_i$ denotes the $i^{th}$ agent in the FL system, $D_i$ denotes its local data, and $M_i$ its classifier with parameters $\theta_i$. A client receives a global model from the server and performs in-house distribution using its local data, improving the model's accuracy. However, in-house distribution in isolation can lead to an increase in the bias of the model. We introduce '*generalization*' into the existing approach which adds a second objective to the process by validating against other clients' data ($\arg\min L(\theta_i, D_k)$) to ensure robustness against scenarios that cause the data distribution to change over time.

**Algorithm 2** LGFL: Proposed algorithm for local adaptation for a client $C_i$

Randomly select $N_{cr}$ clients as clients
**for** each round $j \in N$ **do**
  Perform local adaptation of client model $M_{Ci}$
  Evaluate in-house distribution performance $\rho(M_{Ci}, D_i)$ using $D_i$
  Evaluate generalization performance $\gamma(M_{Ci}, D_{cr})$ on $D_{cr}$ by sending $M_{Ci}$ to clients $N_{cr}$
**end for**
Select model trained in learning round $j$ with maximum value of $\alpha\rho(M_{Ci}, D_i) + \beta\gamma(M_{Ci}, D_{cr})$

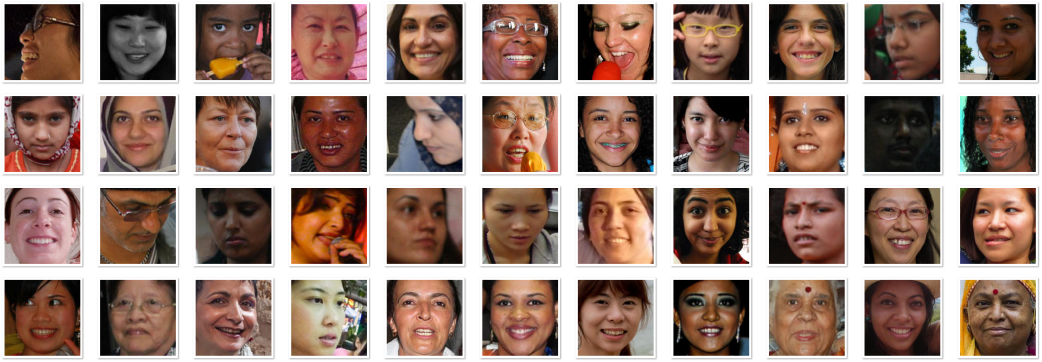

Figure 3: FairFace test images misclassified by an adapted client model personalized using LA that are correctly classified by the model adapted using the proposed LA+LGFL+RS algorithm. We can see that a large majority of these are from under-represented groups and the proposed algorithm can help avoid creating biased models by preserving generalizability.