ADAPTIVE CROSS-LAYER ATTENTION FOR IMAGE RESTORATION

Anonymous authors
Paper under double-blind review

ABSTRACT

Non-local attention module has been proven to be crucial for image restoration. Conventional non-local attention processes features of each layer separately, so it risks missing correlation between features among different layers. To address this problem, we propose Cross-Layer Attention (CLA) module in this paper. Instead of finding correlated key pixels within the same layer, each query pixel is allowed to attend to key pixels at previous layers of the network. In order to mitigate the expensive computational cost of such hierarchical attention design, only a small fixed number of keys can be selected for each query from a previous layer. We further propose a variant of CLA termed Adaptive Cross-Layer Attention (ACLA). In ACLA, the number of keys to be aggregated for each query is dynamically selected. A neural architecture search method is used to find the insert positions of ACLA modules to render a compact neural network with compelling performance. Extensive experiments on image restoration tasks including single image super-resolution, image denoising, image demosaicing and image compression artifacts reduction validate the effectiveness and efficiency of ACLA.

1 INTRODUCTION

Image restoration algorithms aim to recover a high-quality image from a contaminated input image by solving an ill-posed image restoration problem with irreversible degradation. There are various image restoration tasks depending on the type of corruptions, such as, image denoising (Zhang et al., 2019; Liu et al., 2018b), demosaicing (Zhang et al., 2017b; 2019), single image super-resolution (Fan et al., 2019; Lai et al., 2017; Tai et al., 2017), and image compression artifacts reduction(Zhang et al., 2017a). To restore corrupted information from the contaminated image, a variety of image priors (Buades et al., 2005; Zoran & Weiss, 2011; Zontak et al., 2013) were proposed.

Recently, image restoration methods based on deep neural networks have achieved great success. Inspired by the widely used non-local prior, most recent approaches based on neural networks (Zhang et al., 2019; Liu et al., 2018b) adapt non-local attention into their neural network to enhance the representation learning, following the non-local neural networks (Wang et al., 2018). In a non-local block, a response is calculated as a weighted sum over all pixel-wise features on the feature map to account for long-range information. Such a module was initially designed for high-level recognition tasks like image classification, and has been proven to be beneficial for low-level vision tasks (Zhang et al., 2019; Liu et al., 2018b).

Albeit significant progress, most existing CNN-based image restoration methods tend to smooth texture details of low quality images in the super-resolved result, potentially due to only referring to keys in the same layer in their attention modules. Inspired by the potential benefit of exploring feature correlation across intermediate layers, Holistic Attention Network (HAN) (Niu et al., 2020) is proposed to find interrelationship among features at hierarchical levels with a Layer Attention Module (LAM). However, LAM assigns a single importance weight to the feature map at each layer and neglects the difference of spatial positions of features. Recent research in omnidirectional representation (Tay et al., 2021) suggests that exploring the relationship among features at different layers can benefit the representation learning of neural networks. However, calculating correlation among features at hierarchical layers is non-trivial due to the quadratic complexity of dot product attention. The complexity of such cross-layer attention design is increased from $(HW)^2L$ to $(HWL)^2$, where H, W are the height and width of the feature map and L is the number of layers.

1.1 CONTRIBUTIONS

Our contributions are listed as follows.

First, to address the problem caused by only referring to keys with the same layer in most attention modules, we propose a novel attention module termed Cross-Layer Attention (CLA), which searches for keys across different layers for each query feature. With the help of the deformation mechanism, CLA only attends to a small set of keys at different layers for each query feature.

Second, we design a variant of CLA termed as Adaptive Cross-Layer Attention (ACLA) to dynamically select sampled keys for each query, as shown in Figure 1. Besides, a neural architecture search method is proposed to find the insert positions of ACLA at the same time. We deploy ACLA modules on commonly used neural network models, e.g. EDSR (Lim et al., 2017a), for image restoration. Extensive experiments on single image super-resolution, image demosaicing and image denoising demonstrate the effectiveness of our approach.

2 RELATED WORKS

2.1 NEURAL NETWORKS FOR IMAGE RESTORATION

Adopting neural networks for image restoration has achieved great success by utilizing their power in representation. ARCNN (Dong et al., 2015a) was first proposed to use CNN for compression artifacts reduction. Later, DnCNN (Zhang et al., 2017a) uses residual learning and batch normalization to boost performance of CNN for image denoising. In IRCNN (Zhang et al., 2017b), a learned set of CNNs are used as denoising prior for other image restoration tasks. For single image super-resolution(Lai et al., 2017; Zhang et al., 2018d; Haris et al., 2018; Fan et al., 2019), even more efforts have been devoted to designing advanced architectures and learning methods. For example, RDN (Zhang et al., 2018d) and CARN (Ahn et al., 2018) fuse low-level and high-level features with dense connection to provide richer information and details for reconstructing. Recently, non-local attention (Liu et al., 2018b; Dai et al., 2019; Mei et al., 2020) is also used to further boost the peformance of CNN for image restoration.

2.2 ATTENTION MECHANISM

Attention mechanism has been applied to many computer vision tasks, such as image captioning (Xu et al., 2015; Chen et al., 2017) and image classification (Hu et al., 2018; Wang et al., 2017). Non-local attention (Wang et al., 2018) was first proposed to capture long-range dependencies for high-level recognition tasks. Recently, several works propose to leverage non-local attention for low-level vision tasks. In NLRN (Liu et al., 2018b) a recurrent neural network is proposed to incorporate non-local attention. RNAN (Zhang et al., 2019) proposed a residual local and non-local mask branch to obtain non-local mixed attention. RCAN (Zhang et al., 2018c) exploits the interdependencies among feature channels by generating different attention for each channel-wise feature. HAN (Niu et al., 2020) is proposed to find interrelationship among features at hierarchical levels with a layer attention module. Besides, some recent works attempt to explore the benefits of transformer based models for image restoration. IPT (Chen et al., 2021) is proposed to solve various restoration problems in a multi-task learning framework based on visual Transformer. SwinIR (Liang et al., 2021) adopt the architecture of Swin Transformer. However, compared with methods using CNN architecture, both IPT and SwinIR requires large-scale datasets for good performance.

2.3 NEURAL ARCHITECTURE SEARCH

Neural Architecture Search (NAS) has attracted lots of attention recently. Early works of NAS adopt heuristic methods such as reinforcement learning (Zoph & Le, 2016) and evolutionary algorithm (Xie & Yuille, 2017). The search process with such methods requires huge computational resources (Xie & Yuille, 2017). Recently, various strategies are designed to reduce the expensive costs including weight sharing (Pham et al., 2018), progressive search (Liu et al., 2018a) and one-shot search (Liu et al., 2018c; Xie et al., 2018). For example, DARTS (Liu et al., 2018c) firstly relaxes the search space to be continuous and conducts differentiable search. The architecture parameters and network weights are trained simultaneously by gradient descent to reduce the search time.

Despite the success of NAS methods for classification, dense prediction tasks such as semantic image segmentation and image restoration, usually demand more complicate network architectures. Some recent works have been devoted to explore hierarchical search space for dense prediction tasks. For example, Auto-DeepLab (Liu et al., 2019) introduces a hierarchical search space for semantic image segmentation. DCNAS (Zhang et al., 2021) build a densely connected search space to extract multi-level information. HNAS (Guo et al., 2020) also adopts a hierarchical search space for single image super-resolution.

3 METHOD

3.1 CLA: CROSS-LAYER ATTENTION

Non-Local Attention. Non-local attention (Wang et al., 2018) is designed to integrate self-attention mechanism into convolutional neural networks for computer vision tasks. It is usually applied on an input feature map $x \in \mathbb{R}^{H \times W \times C}$ to explore self similarities among all spatial positions of that feature map. For illustration purpose, we reshape x to $N \times C$, where $N = H \times W$. A generic non-local attention can be formulated as

$$y_i = \frac{1}{\mathcal{C}(x)} \sum_{n=1}^{N} f(x_i, x_n) g(x_n), \tag{1}$$

where i indexes the spatial position of feature maps. y is the output of non-local attention with the same size as x. $f(x_i, x_n)$ outputs the pairwise affinity between the query feature x_i and its key feature x_n. $g(x_n)$ computes an embedding of feature x_n. $C(x)$ is a normalization term.

Non-local attention in Equation (1) is usually wrapped into a non-local block (Wang et al., 2018) with a residual connection from the input feature x. The mathematical formulation is given as

$$z = h(y) + x, \tag{2}$$

where h denotes a learnable feature transformation.

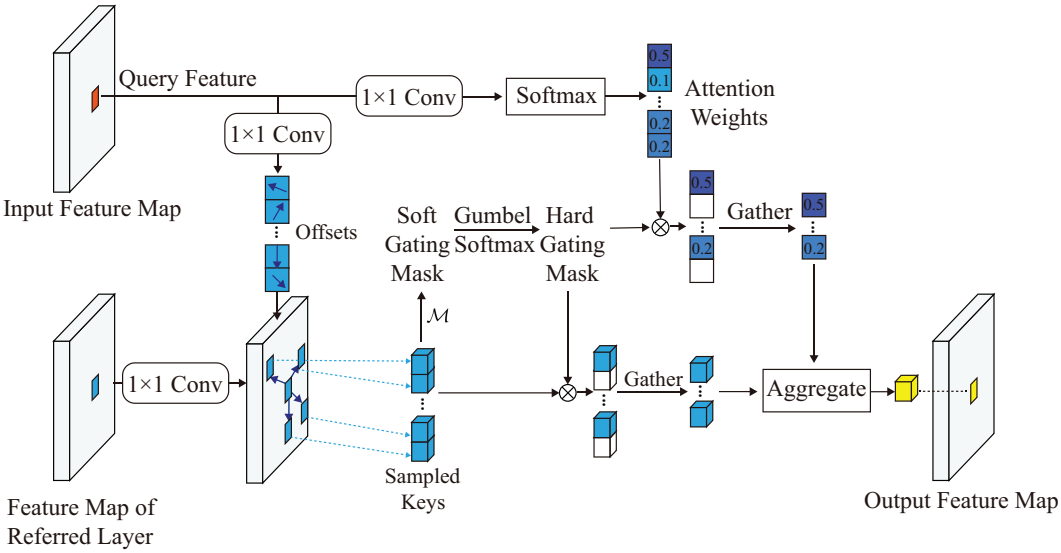

Figure 1: Illustration of Adaptive Cross-Layer Attention (ACLA) module. For each query pixel, a 1×1 convolution layer is used to obtain the offsets of the positions of keys sampled from the referred layer. Then, a convolution layer and Softmax are applied to the query feature to generate attention weights for sampled keys. To adaptively find the number of informative keys, a mask unit $\mathcal{M}$ together with the gumbel-softmax operation is used to generate a hard gating mask for the sampled keys. After the Hard Gating Mask is applied, the features of the selected keys are weighted by the corresponding attention weights. During inference time, a gather operation is applied on the selected keys.

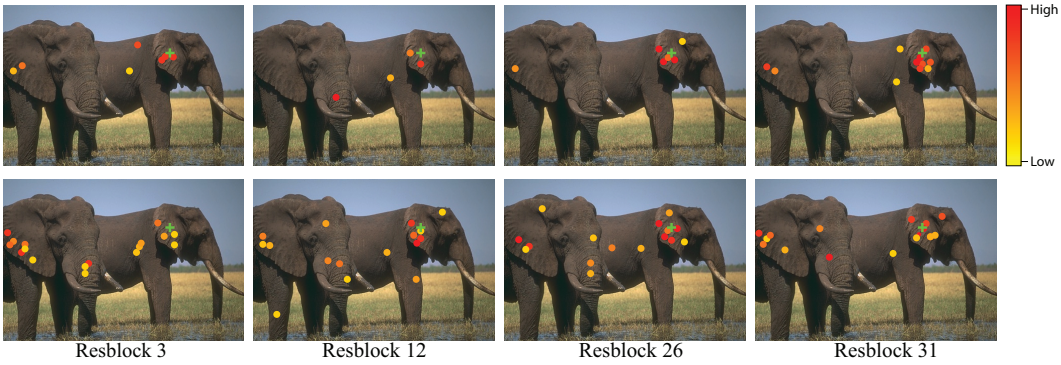

Figure 2: Visualization of selected keys by ACLA for a query feature from the 31st resblock. The first row shows the positions of the keys selected by ACLA with $K = 16$. For comparison, the positions of keys with top-16 attention weights following the vanilla Cross-Layer Non-Local attention formulation in Equation (3) is diplayed in the second row. From left to the right are the sampled key positions from the 3rd, 12nd, 26th, and 31st resblock. The query feature is shown as green cross marker. Each sampled key feature is marked as a circle whose color indicates its attention weight. It can be observed that ACLA adaptively selects semantically similar key features for the query feature, and its vanilla counterpart lacks such capability. More visualization results can be found in Appendix A.3.

Cross-Layer Attention. To find for keys from different layers for each query feature, we propose Cross-Layer Attention (CLA). To derive the formulation of CLA, we start by adapting non-local attention in Equation (1) to a cross-layer design. Suppose that x^i is the output of the i-th layer in a CNN backbone for image restoration, where $i \in \{1 \cdots L\}$ and L is the number of layers. A non-local attention with cross-layer design can be formulated as

$$y_i^j = \frac{1}{\mathcal{C}(x^j)} \sum_{l=1}^{j} \sum_{n=1}^{N} f(x_i^j, x_n^l) g(x_n^l), \tag{3}$$

where the superscripts j, l index the layer and the subscripts i, n index the spatial locations of features. y, x denote the output feature and input feature respectively. Query feature in this formulation can thus refer to features in previous layers. However, given the quadratic complexity of correlation computation, the complexity of such adaption of non-local attention is increased from N^2L to $(NL)^2$. In order to mitigate the expensive computation cost, we leverage deformable mechanism proposed in deformable convolution (DCN) (Dai et al., 2017) to design our proposed CLA as

$$y_i^j = \frac{1}{\mathcal{C}(x^j)} \sum_{l=1}^{j} \sum_{k=1}^{K} f(x_i^j, x^l(\boldsymbol{p}_i + \Delta \boldsymbol{p}_{ik})) g(x^l(\boldsymbol{p}_i + \Delta \boldsymbol{p}_{ik})), \tag{4}$$

where k indexes the sampled keys. $\boldsymbol{p}_i$ represents the 2-d spatial position of the query in the feature map, and $\Delta \boldsymbol{p}_{ik}$ is the 2-d offset from the position of query $\boldsymbol{p}_i$ to the corresponding sampled key. As $\boldsymbol{p}_q + \Delta \boldsymbol{p}_{qk}$ can be fractional, bilinear interpolation is used as in (Dai et al., 2017) to compute $x(\boldsymbol{p}_q + \Delta \boldsymbol{p}_{ik})$. To further reduce the computation complexity in computing attention weights, attention weights can be generated from query feature alone. Thus, our proposed CLA can be simplified as

$$y_i^j = \frac{1}{\mathcal{C}(x^j)} \sum_{l=1}^{j} \sum_{k=1}^{K} f(x_i^j) g(x^l(\boldsymbol{p}_i + \Delta \boldsymbol{p}_{ik})), \tag{5}$$

where f is the function to generate attention weights from the query feature. Similar to the design for non-local attention module in (Wang et al., 2018), when deploying CLA in CNN backbones, we also wrap it into a non-local block with residual connection.

With our proposed CLA, each query feature now can refer to a fixed number of keys from each previous layer. However, query features at different spatial positions may have different preferences on keys sampled from different layers. Especially for image restoration tasks, the restoration process

at different spatial position may vary significantly due to the diversity of textures in an image. Besides, when deploying CLA in CNN backbones for image restoration, we find that increasing the number of inserted CLA will not constantly improve the performance, but result in much heavier computation cost. This observation motivates us to search for an optimal configuration of deploying CLA in neural networks to efficiently utilize its representation learning capacity.

3.2 ACLA: Adaptive Cross-Layer Attention

To achieve adaptive key selection and the search for the optimal configuration of CLA, we propose Adaptive Cross-Layer Attention (ACLA). Specifically, for each query feature, we dynamically search for the keys sampled from previous layers with ACLA. Besides, when deploying ACLA in CNN backbones, a neural architecture search method is used to search for the insert positions of ACLA. An objective based on the computation cost of inserted ACLA modules is used to supervise the search procedure.

Adaptive Cross-Layer Attention. To adaptively search for the informative sampled keys for a query feature from its previous layers, we first follow the method in CLA to get a fixed number of sampled keys from each layer. Next, a hard gating mask is applied on each of the sampled key as

$$y_i^j = \frac{1}{\mathcal{C}(x^j)} \sum_{l=1}^{j} \sum_{k=1}^{K} m_{i,l}^k f(x_i^j) g(x^l(\boldsymbol{p}_i + \Delta \boldsymbol{p}_{ik})). \tag{6}$$

where $m_{i,l}^k$ is the hard gating mask for the k-th sampled key from x^l for query feature x_i^j, whose value is either 1 or 0. We further relax the hard gating mask into continuous domain with the simplified binary Gumbel-Softmax (Verelst & Tuytelaars, 2020). Thus, the hard gating mask $m_{i,l}^k$ can be approximated by

$$\hat{m}_{i,l}^k = \sigma\Big(\frac{\beta_{i,l}^k + \epsilon_{i,l,1}^k - \epsilon_{i,l,2}^k}{\tau}\Big), \tag{7}$$

with sampling parameter $\beta_{i,l}^k$, Gumbel noise $\epsilon_{i,l,1}^k, \epsilon_{i,l,2}^k$, and temperature τ. σ is the sigmoid function. The sampling parameter $\beta_{i,l}^k$ can be regarded as a soft gating mask. To make the gating decisions on sampled keys input-dependent, a mask unit $\mathcal{M}$ is used to generate the soft gating mask β from the features of the sampled keys as

$$\beta_{j,l}^k = \mathcal{M}(x^l(\boldsymbol{p}_i + \Delta \boldsymbol{p}_{ik})). \tag{8}$$

Following the design in (Verelst & Tuytelaars, 2020), a 1×1 convolution layer is used as the mask unit $\mathcal{M}$ in our model. To train the mask unit $\mathcal{M}$, the straight-through estimator from (Bengio et al., 2013; Verelst & Tuytelaars, 2020) is used for $m_{i,l}^k$. Specially during backward pass, we set $m_{i,l}^k = \hat{m}_{i,l}^k$. While in forward pass, we set

$$m_{i,l}^k = \begin{cases} 1 & \hat{m}_{i,l}^k > 0.5, \\ 0 & \hat{m}_{i,l}^k \leq 0.5. \end{cases} \tag{9}$$

Besides, Gumbel noise $\epsilon_{i,l,1}^k$ and $\epsilon_{i,l,2}^k$ are set to 0 during inference.

Insert Positions. To search for the insert positions of ACLA, we first densely insert ACLA after each layer of the CNN backbone as in Figure 3 to build the supernet. Similar to the gating formulation in ACLA, we can also define a hard decision parameter s_j for the j-th inserted ACLA in the supernet. The simplified binary Gumbel-Softmax (Verelst & Tuytelaars, 2020) can also be used here to approximate the hard decision parameter s_j by

$$s_j = \sigma\Big(\frac{\alpha_j + \epsilon_1^j - \epsilon_2^j}{\tau}\Big), \tag{10}$$

with sampling parameter α_j, Gumbel noise ϵ, and temperature τ. Thus, the output of ACLA in the supernet can be expressed as

$$y_i^j = \frac{1}{\mathcal{C}(x^j)} \sum_{l=1}^{j} s_l \sum_{k=1}^{K} m_{i,l}^k f(x_i^j) g(x^l(\boldsymbol{p}_i + \Delta \boldsymbol{p}_{ik})). \tag{11}$$

Different from data-dependent design of the gating mask in ACLA, α_j here is defined as architecture parameter and can be directly optimized by stochastic gradient descent (SGD) during the search

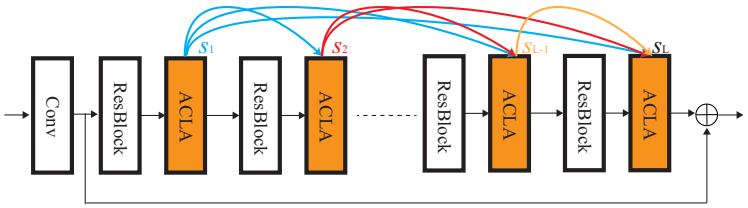

Figure 3: Illustration of the search for insert positions in ACLA

process. By gradually decrease the value of temperature, α_j will be optimized such that s_j will approach 1 or 0.

Search Procedure. We propose to optimize both the accuracy and the computation cost (FLOPs) of the ACLA modules inserted. Thus, the cost of the ACLA modules inserted needs to be estimated during the search phase. Following the formulation of the ACLA in the supernet, we can estimate the cost of the ACLA inserted after the j-th residual block as

$$\texttt{cost}_j = \sum_{l=1}^{j} s_l \sum_{k=1}^{K} (2m_{j,l}^k NC^2 + 2NC^2 + 6KNC), \tag{12}$$

where N is the number of spatial positions. C is the number of channels. K is the maximal number of sampled keys. Then we can get the estimation on the computation cost of all inserted ACLA modules as

$$\texttt{cost} = \sum_{j=1}^{L} s_j \texttt{cost}_j. \tag{13}$$

As mentioned before, with the help of the continuously relaxed representation in the supernet, we can search for the architecture by updating the architecture parameters using SGD. To supervise the search process, we design a loss function with the cost-based regularization to achieve the multi-objective optimization:

$$\mathcal{L}(w, \alpha) = \mathcal{L}_{MSE} + \lambda \log \texttt{cost}, \tag{14}$$

where λ is the hyper-parameters that controls the magnitude of the cost term.

We find that at the beginning of the search process, ACLA modules inserted at shallow layers are more likely to be strengthened. To solve this problem, we split our search procedure into two stages. In the first stage, we only optimize the parameters of the network for enough epochs to get network weights sufficiently trained. In the second stage, we activate the architecture optimization. We alternatively optimize the network weights by descending $\nabla_w \mathcal{L}_{train}(w, \alpha)$ on the training set, and optimize the architecture parameters by descending $\nabla_\alpha \mathcal{L}_{val}(w, \alpha)$ on the validation set. When the search procedure terminates, we derive the insert positions based on the architecture parameters α.

4 Experiments

4.1 Implementation Details

We select DIV2K (Timofte et al., 2017) as the training set for our experiments as like in (Dai et al., 2019; Zhang et al., 2018d), which include 800 images for training and 100 images for validation. We augment the training images by randomly rotating 90°, 180°, 270°and horizontally flipping. In each mini-batch, 16 low-quality patches with size 48×48 are provided as inputs. ADAM optimizer is used for both the search phase and training phase. Default values of β_1 and β_2 are set as 0.9 and 0.999, respectively, and we set $\epsilon = 10^{-8}$. Before the search, we perform a cross-validation on 20% of the training data to decide the value of λ. In search phase, the learning rate is initialized as 10^{-4} and cosine learning rate schedule is used. The search process takes 200 epochs. In the training phase, the learning rate is initialized as 10^{-4} and then reduced to half every 200 epochs. The model is trained for 1000 epochs in total. $K = 8$ is sef for all CLA modules by default. For all ACLA modules, the value of K are initialized as 16.

Table 1: Quantitative results on benchmark datasets for single image super-resolution

Method	Scale	Set5		Set14		B100		Urban100		Manga109	
		PSNR	SSIM	PSNR	SSIM	PSNR	SSIM	PSNR	SSIM	PSNR	SSIM
Bicubic	×2	33.66	0.9299	30.24	0.8688	29.56	0.8431	26.88	0.8403	30.80	0.9339
SRCNN	×2	36.66	0.9542	32.45	0.9067	31.36	0.8879	29.50	0.8946	35.60	0.9663
VDSR	×2	37.53	0.9590	33.05	0.9130	31.90	0.8960	30.77	0.9140	37.22	0.9750
MemNet	×2	37.78	0.9597	33.28	0.9142	32.08	0.8978	31.31	0.9195	37.72	0.9740
SRMDNF	×2	37.79	0.9601	33.32	0.9159	32.05	0.8985	31.33	0.9204	38.07	0.9761
RDN	×2	38.24	0.9614	34.01	0.9212	32.34	0.9017	32.89	0.9353	39.18	0.9780
HAN	×2	38.27	0.9614	**34.16**	0.9217	32.41	0.9027	33.35	0.9385	39.46	0.9787
EDSR	×2	38.11	0.9602	33.92	0.9195	32.32	0.9013	32.93	0.9351	39.10	0.9773
EDSR+CLA	×2	38.24	0.9613	34.08	0.9214	32.41	0.9028	33.28	0.9367	39.23	0.9780
EDSR+ACLA	×2	**38.31**	**0.9617**	34.10	**0.9221**	32.43	**0.9030**	33.35	0.9385	39.42	0.9787
RCAN	×2	38.27	0.9614	34.12	0.9216	32.41	0.9027	33.34	0.9384	39.44	0.9786
RCAN+ACLA	×2	38.30	0.9615	34.15	0.9217	**32.45**	0.9029	**33.39**	**0.9387**	**39.48**	**0.9789**
Bicubic	×3	30.39	0.8682	27.55	0.7742	27.21	0.7385	24.46	0.7349	26.95	0.8556
SRCNN	×3	32.75	0.9090	29.30	0.8215	28.41	0.7863	26.24	0.7989	30.48	0.9117
VDSR	×3	33.67	0.9210	29.78	0.8320	28.83	0.7990	27.14	0.8290	32.01	0.9340
MemNet	×3	34.09	0.9248	30.00	0.8350	28.96	0.8001	27.56	0.8376	32.51	0.9369
SRMDNF	×3	34.12	0.9254	30.04	0.8382	28.97	0.8025	27.57	0.8398	33.00	0.9403
RDN	×3	34.71	0.9296	30.57	0.8468	29.26	0.8093	28.80	0.8653	34.13	0.9484
HAN	×3	34.75	0.9299	30.67	0.8483	29.32	0.8110	29.10	0.8705	**34.48**	0.9500
EDSR	×3	34.65	0.9280	30.52	0.8462	29.25	0.8093	28.80	0.8653	34.17	0.9476
EDSR+CLA	×3	34.75	0.9297	30.66	0.8481	29.30	0.8113	29.05	0.8700	34.33	0.9492
EDSR+ACLA	×3	**34.76**	0.9303	**30.69**	0.8484	**29.34**	**0.8115**	29.12	0.8706	34.40	0.9498
RCAN	×3	34.74	0.9299	30.65	0.8482	29.32	0.8111	29.09	0.8702	34.44	0.9499
RCAN+ACLA	×3	34.74	**0.9304**	30.68	**0.8485**	29.33	**0.8115**	**29.14**	**0.8709**	**34.48**	**0.9503**
Bicubic	×4	28.42	0.8104	26.00	0.7027	25.96	0.6675	23.14	0.6577	24.89	0.7866
SRCNN	×4	30.48	0.8628	27.50	0.7513	26.90	0.7101	24.52	0.7221	27.58	0.8555
VDSR	×4	31.35	0.8830	28.02	0.7680	27.29	0.0726	25.18	0.7540	28.83	0.8870
MemNet	×4	31.74	0.8893	28.26	0.7723	27.40	0.7281	25.50	0.7630	29.42	0.8942
SRMDNF	×4	31.96	0.8925	28.35	0.7787	27.49	0.7337	25.68	0.7731	30.09	0.9024
HAN	×4	32.64	0.9002	**28.90**	0.7890	27.80	0.7442	26.85	**0.8094**	**31.42**	0.9177
RDN	×4	32.47	0.8990	28.81	0.7871	27.72	0.7419	26.61	0.8028	31.00	0.9151
EDSR	×4	32.46	0.8968	28.80	0.7876	27.71	0.7420	26.64	0.8033	31.02	0.9148
EDSR+CLA	×4	**32.64**	0.9001	28.83	0.7880	27.79	0.7435	26.79	0.8083	31.16	0.9159
EDSR+ACLA	×4	**32.64**	**0.9003**	28.88	0.7883	**27.85**	0.7443	26.87	0.8087	31.24	0.9174
RCAN	×4	32.63	0.9002	28.87	0.7889	27.77	0.7436	26.82	0.8087	31.22	0.9173
RCAN+ACLA	×4	**32.64**	0.9002	**28.90**	**0.7892**	27.82	**0.7445**	**26.89**	0.8089	**31.29**	**0.9179**

4.2 Single Image Super-resolution

We test our methods on top of the widely used super-resolution backbone EDSR (Lim et al., 2017b) and RCAN (Zhang et al., 2018b). The LR images are obtained by the bicubic downsampling of HR images. Our methods are evaluated on five standard datasets: Set5 (Bevilacqua et al., 2012), Set14 (Zeyde et al., 2010), B100 (Martin et al., 2001), Urban100 (Huang et al., 2015), and Manga109 (Matsui et al., 2017). The reconstructed results by our model are first converted to YCbCr space, PSNR and SSIM in the luminance channel is calculated in our experiments. We compare our methods with 6 other methods: SRCNN (Dong et al., 2015b), VDSR (Kim et al., 2016), MemNet (Tai et al., 2017), SRMDNF (Zhang et al., 2018a), RDN (Zhang et al., 2018d), and HAN (Niu et al., 2020). The quantitative results are shown in Table 1. Some visual results can be found in Appendix A.4. Our methods greatly improves the performance of EDSR and RCAN on all benchmarks and all upsampling scales. Besides, our methods outperform current state-of-the-art method HAN, which is also an attention based method, demonstrating the superiority of our proposed attention modules.

4.3 Image Denoising

We evaluate our proposed CLA and ACLA module on standard benchmarks for image denoising: KCLDAk24, BSD68 (Martin et al., 2001), and Urban100 (Huang et al., 2015). The noisy images are created by adding AWGN noises with $\sigma = 10, 30, 50, 70$. We compare our approach with 4 methods, namely DnCNN (Zhang et al., 2017a), MemNet (Tai et al., 2017), RNAN (Zhang et al., 2019), and PANet (Mei et al., 2020). For fair comparisons, a 16-layer EDSR is used as the baseline CNN backbone. As shown in Table 2, our methods are also beneficial for representation learning with neural network on image denoising.

Table 2: Quantitative results on benchmark datasets for single image denoising

Method	Params (M)	KCLDAk24				BSD68				Urban100			
		10	30	50	70	10	30	50	70	10	30	50	70
MemNet	0.677	N/A	29.67	27.65	26.40	N/A	28.39	26.33	25.08	N/A	28.93	26.53	24.93
DnCNN	0.672	36.98	31.39	29.16	27.64	36.31	30.40	28.01	26.56	36.21	30.28	28.16	26.17
RNAN	7.409	37.24	31.86	29.58	28.16	36.43	30.63	28.27	26.83	36.59	31.50	29.08	27.45
PANet	5.957	37.35	31.96	29.65	28.20	36.50	30.70	28.33	26.89	36.80	31.87	29.47	27.87
baseline	5.430	37.21	31.85	29.60	28.15	36.34	30.60	28.28	26.84	36.63	31.64	29.22	27.54
CLA	5.896	37.37	**31.97**	29.67	28.23	36.52	30.74	28.35	26.91	36.79	31.85	29.43	27.88
ACLA	5.914	**37.38**	**31.97**	**29.70**	**28.25**	**36.54**	**30.77**	**28.36**	**26.94**	**36.85**	**31.90**	**29.49**	**27.91**

4.4 Image Compression Artifacts Reduction

For the task of image compression artifacts reduction (CAR), we compare our method with 4 approaches: DnCNN (Zhang et al., 2017a), RNAN (Zhang et al., 2019), and PANet (Mei et al., 2020). All methods are evaluated on LIVE1 (Sheikh et al., 2005) and Classic5 (Foi et al., 2007). To obtain the low-quality compressed images, we follow the standard JPEG compression process and use Matlab JPEG encoder with quality $q = 10, 20, 30, 40$. For fair comparison, the results are only evaluated on Y channel in YCbCr Space. The quantitative results are shown in Table 3. 16-layer EDSR is used as our baseline CNN backbone. Both CLA and ACLA improves the performance of the neural network baseline.

Table 3: Quantitative results on benchmark datasets for image compression artifacts reduction

Method	Params (M)	LIVE1				Classic5			
		10	20	30	40	10	20	30	40
JPEG	-	27.77	30.07	31.41	32.35	27.82	30.12	31.48	32.43
DnCNN	0.672	29.19	31.59	32.98	33.96	29.40	31.63	32.91	33.77
RNAN	7.409	29.63	32.03	33.45	34.47	29.96	32.11	33.38	34.27
PANet	5.957	29.69	32.10	33.55	34.55	30.03	32.36	33.53	34.38
baseline	5.430	29.63	32.04	33.50	35.51	29.99	32.22	33.43	34.31
CLA	5.896	**29.73**	32.13	33.57	35.54	30.05	32.38	33.55	34.42
ACLA	5.914	**29.73**	**32.17**	**33.63**	**35.55**	**30.07**	**32.42**	**33.58**	**34.44**

4.5 Ablation Study and Discussion

ACLA vs. Non-local attention To verify the effectiveness of our proposed methods, we compare CLA and ACLA with Non-Local attention (Wang et al., 2018) and vanilla Cross-Layer Non-Local attention in terms of computational efficiency and performance. The vanilla Cross-Layer Non-Local attention follows the formulation in Equation (3). The comparison is performed on Set5 for single image super-resolution with EDSR backbone. The Non-Local attention modules and vanilla Cross-Layer Non-Local attention modules are inserted evenly after every 8th residual blocks. All the FLOPs in our ablation study are calculated for input of size 48×48. Results are presented in Table 4, where NL stands for Non-Local attention and CLNL stands for vanilla Cross-Layer Non-Local. As shown in Table 4, with less computation cost, CLA and ACLA achieve much better performance compared to standard Non-Local attention module.

Table 4: Efficiency and performance comparison with Non-Local attention on Set5

Method	PSNR	FLOPs(G)	Params(M)
EDSR	38.11	93.97	40.73
NL	38.15	109.38	43.56
CLNL	38.14	122.67	45.87
CLA (Ours)	38.24	96.93	42.13
ACLA (Ours)	38.31	96.97	42.29

Number of inserted CLA modules As stated before, the computation cost of the cross-layer design in CLA is quadratic to the number of inserted CLA modules. To verify that dense insertion of CLA modules is not necessary, we perform an ablation study on the number of inserted CLA modules on Set5 ($\times 2$) for single image super-resolution. We use EDSR as our backbone where L CLA modules are evenly inserted. As shown in Table 5, with more CLA modules inserted, the performance can be slightly improved. However, the computation cost and parameter size of the model are also greatly

increased. While with insert positions searched as shown in Table 6, our model can reach comparable performance with much less computational resources.

Table 5: Ablation study on number of inserted CLA modules on Set5

Method	L	PSNR	FLOPs(G)	Params(M)
CLA	4	38.24	96.93	42.13
CLA	8	38.27	101.37	44.35
CLA	16	38.27	118.48	51.47
CLA	32	38.26	182.93	79.29

Ablation study on ACLA In our paper, we propose ACLA, which is a variant of CLA. Two adaptive designs are applied in ALDA to select the sampled keys to be aggregated and search for the insert positions in CNN backbones. To verify the effectiveness of the two adaptive designs in ACLA, we perform an ablation study on their influence on top op CLA. The comparison is also performed on Set5 ($\times 2$) for single image super-resolution with EDSR backbone. The results are shown in Table 6. CLA-I stands for CLA is deployed with the search for insert positions as in ACLA. CLA-K stands for CLA that adaptivly select sampled keys as in ACLA. We can clearly see that both adaptive designs are beneficial to the performance of CLA.

Table 6: Ablation study on the effectiveness of insertion position search and sampled keys selection

Method	Description of Methods	PSNR	FLOPs(G)	Params(M)
CLA	-	38.24	96.93	42.13
CLA-I	search for insert positions	38.27	96.93	42.13
CLA-K	select aggregated keys	38.28	96.87	42.29
ACLA	-	38.31	96.98	42.29

Number of sampled keys K for CLA and ACLA As discussed before, the key point sampling strategy in CLA plays a vital role to reduce the computation cost. To verify that a small number of sampled keys K can be sufficient, we perform experiments on CLA with different value of K. The comparison is performed on Set5 ($\times 2$) for single image super-resolution with EDSR backbone. Besides, we also compare ACLA with different value K, which is the maximal number of sampled keys. The results are displayed in Table 7 and Table 8. With increased value of K, the performance of CLA and ACLA does not constantly improve. CLA with $K = 8$ and ACLA with $K = 16$ can already achieve comparable performance to those with larger K. This is also consistent with studies (Zhang et al., 2015; Elad & Aharon, 2006) on the power of sparse representation learning for image restoration.

Table 7: Ablation study on number of sampled keys in CLA on Set5

Method	K	PSNR	FLOPs(G)	Params(M)
CLA	4	38.22	96.71	42.09
CLA	8	38.24	96.93	42.13
CLA	16	38.25	97.38	42.21
CLA	32	38.23	97.90	42.39
CLA	64	38.25	98.92	42.74

Table 8: Ablation study on maximum number of sampled keys in ACLA on Set5

Method	K	PSNR	FLOPs(G)	Params(M)
ACLA	8	38.28	96.78	42.18
ACLA	16	38.31	96.98	42.29
ACLA	32	38.30	97.56	42.41
ACLA	64	38.31	98.03	42.69
ACLA	128	38.29	99.17	43.02

5 Conclusions

In this paper, we first propose a novel attention module Cross-Layer Attention (CLA) to search for informative keys across different layers for each query feature. We further propose a variant of CLA, termed as Adaptive Cross-Layer Attention (ACLA). In the proposed ACLA, each query dynamically select keys from different layers conditioned on the input. A NAS method is used to search for the insert positions of ACLA to achieve effective and efficient deployment. Experiments on image restoration tasks including single-image super resolution, image denoising, image compression artifacts reduction and image demosaicing validate the effectiveness and efficiency of CLA and ACLA.

REFERENCES

Namhyuk Ahn, Byungkon Kang, and Kyung-Ah Sohn. Fast, accurate, and lightweight super-resolution with cascading residual network. In *Proceedings of the European Conference on Computer Vision (ECCV)*, pp. 252–268, 2018.

Yoshua Bengio, Nicholas Léonard, and Aaron Courville. Estimating or Propagating Gradients Through Stochastic Neurons for Conditional Computation. 8 2013. URL `http://arxiv.org/abs/1308.3432`.

Marco Bevilacqua, Aline Roumy, Christine Guillemot, and Marie Line Alberi-Morel. Low-complexity single-image super-resolution based on nonnegative neighbor embedding. 2012.

Antoni Buades, Bartomeu Coll, and J-M Morel. A non-local algorithm for image denoising. In *CVPR*, 2005.

Hanting Chen, Yunhe Wang, Tianyu Guo, Chang Xu, Yiping Deng, Zhenhua Liu, Siwei Ma, Chunjing Xu, Chao Xu, and Wen Gao. Pre-trained image processing transformer. In *Proceedings of the IEEE/CVF Conference on Computer Vision and Pattern Recognition*, pp. 12299–12310, 2021.

Long Chen, Hanwang Zhang, Jun Xiao, Liqiang Nie, Jian Shao, Wei Liu, and Tat-Seng Chua. Sca-cnn: Spatial and channel-wise attention in convolutional networks for image captioning. In *Proceedings of the IEEE conference on computer vision and pattern recognition*, pp. 5659–5667, 2017.

Jifeng Dai, Haozhi Qi, Yuwen Xiong, Yi Li, Guodong Zhang, Han Hu, and Yichen Wei. Deformable convolutional networks. In *Proceedings of the IEEE international conference on computer vision*, pp. 764–773, 2017.

Tao Dai, Jianrui Cai, Yongbing Zhang, Shu-Tao Xia, and Lei Zhang. Second-order attention network for single image super-resolution. In *Proceedings of the IEEE conference on computer vision and pattern recognition*, pp. 11065–11074, 2019.

Chao Dong, Yubin Deng, Chen Change Loy, and Xiaoou Tang. Compression artifacts reduction by a deep convolutional network. In *ICCV*, 2015a.

Chao Dong, Chen Change Loy, Kaiming He, and Xiaoou Tang. Image super-resolution using deep convolutional networks. *IEEE transactions on pattern analysis and machine intelligence*, 38(2): 295–307, 2015b.

Michael Elad and Michal Aharon. Image denoising via sparse and redundant representations over learned dictionaries. *IEEE Transactions on Image processing*, 15(12):3736–3745, 2006.

Yuchen Fan, Jiahui Yu, Ding Liu, and Thomas S Huang. Scale-wise convolution for image restoration. *arXiv preprint arXiv:1912.09028*, 2019.

Alessandro Foi, Vladimir Katkovnik, and Karen Egiazarian. Pointwise shape-adaptive dct for high-quality denoising and deblocking of grayscale and color images. *TIP*, May 2007.

Yong Guo, Yongsheng Luo, Zhenhao He, Jin Huang, and Jian Chen. Hierarchical neural architecture search for single image super-resolution. *IEEE Signal Processing Letters*, 27:1255–1259, 2020.

Muhammad Haris, Gregory Shakhnarovich, and Norimichi Ukita. Deep back-projection networks for super-resolution. In *Proceedings of the IEEE conference on computer vision and pattern recognition*, pp. 1664–1673, 2018.

Jie Hu, Li Shen, and Gang Sun. Squeeze-and-excitation networks. In *Proceedings of the IEEE conference on computer vision and pattern recognition*, pp. 7132–7141, 2018.

Jia-Bin Huang, Abhishek Singh, and Narendra Ahuja. Single image super-resolution from transformed self-exemplars. In *Proceedings of the IEEE conference on computer vision and pattern recognition*, pp. 5197–5206, 2015.

Jiwon Kim, Jung Kwon Lee, and Kyoung Mu Lee. Accurate image super-resolution using very deep convolutional networks. In *Proceedings of the IEEE conference on computer vision and pattern recognition*, pp. 1646–1654, 2016.

Wei-Sheng Lai, Jia-Bin Huang, Narendra Ahuja, and Ming-Hsuan Yang. Deep laplacian pyramid networks for fast and accurate super-resolution. In *CVPR*, 2017.

Jingyun Liang, Jiezhang Cao, Guolei Sun, Kai Zhang, Luc Van Gool, and Radu Timofte. Swinir: Image restoration using swin transformer. *arXiv preprint arXiv:2108.10257*, 2021.

Bee Lim, Sanghyun Son, Heewon Kim, Seungjun Nah, and Kyoung Mu Lee. Enhanced deep residual networks for single image super-resolution. In *The IEEE Conference on Computer Vision and Pattern Recognition (CVPR) Workshops*, July 2017a.

Bee Lim, Sanghyun Son, Heewon Kim, Seungjun Nah, and Kyoung Mu Lee. Enhanced deep residual networks for single image super-resolution. In *Proceedings of the IEEE conference on computer vision and pattern recognition workshops*, pp. 136–144, 2017b.

Chenxi Liu, Barret Zoph, Maxim Neumann, Jonathon Shlens, Wei Hua, Li-Jia Li, Li Fei-Fei, Alan Yuille, Jonathan Huang, and Kevin Murphy. Progressive neural architecture search. In *Proceedings of the European conference on computer vision (ECCV)*, pp. 19–34, 2018a.

Chenxi Liu, Liang-Chieh Chen, Florian Schroff, Hartwig Adam, Wei Hua, Alan L Yuille, and Li Fei-Fei. Auto-deeplab: Hierarchical neural architecture search for semantic image segmentation. In *Proceedings of the IEEE/CVF Conference on Computer Vision and Pattern Recognition (CVPR)*, 2019.

Ding Liu, Bihan Wen, Yuchen Fan, Chen Change Loy, and Thomas S Huang. Non-local recurrent network for image restoration. In *Advances in Neural Information Processing Systems*, pp. 1673–1682, 2018b.

Hanxiao Liu, Karen Simonyan, and Yiming Yang. Darts: Differentiable architecture search. In *International Conference on Learning Representations (ICLR)*, 2018c.

David Martin, Charless Fowlkes, Doron Tal, and Jitendra Malik. A database of human segmented natural images and its application to evaluating segmentation algorithms and measuring ecological statistics. In *Proceedings Eighth IEEE International Conference on Computer Vision. ICCV 2001*, volume 2, pp. 416–423. IEEE, 2001.

Yusuke Matsui, Kota Ito, Yuji Aramaki, Azuma Fujimoto, Toru Ogawa, Toshihiko Yamasaki, and Kiyoharu Aizawa. Sketch-based manga retrieval using manga109 dataset. *Multimedia Tools and Applications*, 76(20):21811–21838, 2017.

Yiqun Mei, Yuchen Fan, Yulun Zhang, Jiahui Yu, Yuqian Zhou, Ding Liu, Yun Fu, Thomas S Huang, and Honghui Shi. Pyramid attention networks for image restoration. *arXiv preprint arXiv:2004.13824*, 2020.

Ben Niu, Weilei Wen, Wenqi Ren, Xiangde Zhang, Lianping Yang, Shuzhen Wang, Kaihao Zhang, Xiaochun Cao, and Haifeng Shen. Single image super-resolution via a holistic attention network. In *European Conference on Computer Vision*, pp. 191–207. Springer, 2020.

Hieu Pham, Melody Guan, Barret Zoph, Quoc Le, and Jeff Dean. Efficient neural architecture search via parameters sharing. In *International Conference on Machine Learning (ICML)*, 2018.

Hamid R Sheikh, Zhou Wang, Lawrence Cormack, and Alan C Bovik. Live image quality assessment database release 2 (2005), 2005.

Ying Tai, Jian Yang, Xiaoming Liu, and Chunyan Xu. Memnet: A persistent memory network for image restoration. In *Proceedings of the IEEE international conference on computer vision*, pp. 4539–4547, 2017.

Yi Tay, Mostafa Dehghani, Vamsi Aribandi, Jai Gupta, Philip Pham, Zhen Qin, Dara Bahri, Da-Cheng Juan, and Donald Metzler. Omninet: Omnidirectional representations from transformers. *arXiv preprint arXiv:2103.01075*, 2021.

Radu Timofte, Eirikur Agustsson, Luc Van Gool, Ming-Hsuan Yang, and Lei Zhang. Ntire 2017 challenge on single image super-resolution: Methods and results. In *Proceedings of the IEEE conference on computer vision and pattern recognition workshops*, pp. 114–125, 2017.

Thomas Verelst and Tinne Tuytelaars. Dynamic convolutions: Exploiting spatial sparsity for faster inference. In *Proceedings of the IEEE/CVF Conference on Computer Vision and Pattern Recognition*, pp. 2320–2329, 2020.

Fei Wang, Mengqing Jiang, Chen Qian, Shuo Yang, Cheng Li, Honggang Zhang, Xiaogang Wang, and Xiaoou Tang. Residual attention network for image classification. In *Proceedings of the IEEE conference on computer vision and pattern recognition*, pp. 3156–3164, 2017.

Xiaolong Wang, Ross Girshick, Abhinav Gupta, and Kaiming He. Non-local neural networks. In *Proceedings of the IEEE conference on computer vision and pattern recognition*, pp. 7794–7803, 2018.

Lingxi Xie and Alan Yuille. Genetic cnn. In *Proceedings of the IEEE/CVF International Conference on Computer Vision (ICCV)*, 2017.

Sirui Xie, Hehui Zheng, Chunxiao Liu, and Liang Lin. Snas: stochastic neural architecture search. In *International Conference on Learning Representations (ICLR)*, 2018.

Kelvin Xu, Jimmy Ba, Ryan Kiros, Kyunghyun Cho, Aaron Courville, Ruslan Salakhudinov, Rich Zemel, and Yoshua Bengio. Show, attend and tell: Neural image caption generation with visual attention. In *International conference on machine learning*, pp. 2048–2057. PMLR, 2015.

Roman Zeyde, Michael Elad, and Matan Protter. On single image scale-up using sparse-representations. In *International conference on curves and surfaces*, 2010.

Kai Zhang, Wangmeng Zuo, Yunjin Chen, Deyu Meng, and Lei Zhang. Beyond a gaussian denoiser: Residual learning of deep cnn for image denoising. *TIP*, 2017a.

Kai Zhang, Wangmeng Zuo, Shuhang Gu, and Lei Zhang. Learning deep cnn denoiser prior for image restoration. In *CVPR*, 2017b.

Kai Zhang, Wangmeng Zuo, and Lei Zhang. Learning a single convolutional super-resolution network for multiple degradations. In *Proceedings of the IEEE Conference on Computer Vision and Pattern Recognition*, pp. 3262–3271, 2018a.

Xiong Zhang, Hongmin Xu, Hong Mo, Jianchao Tan, Cheng Yang, Lei Wang, and Wenqi Ren. Dcnas: Densely connected neural architecture search for semantic image segmentation. In *Proceedings of the IEEE/CVF Conference on Computer Vision and Pattern Recognition*, pp. 13956–13967, 2021.

Y Zhang, K Li, K Li, B Zhong, and Y Fu. Residual non-local attention networks for image restoration. In *International Conference on Learning Representations*, 2019.

Yulun Zhang, Kunpeng Li, Kai Li, Lichen Wang, Bineng Zhong, and Yun Fu. Image super-resolution using very deep residual channel attention networks. In *Proceedings of the European Conference on Computer Vision (ECCV)*, pp. 286–301, 2018b.

Yulun Zhang, Kunpeng Li, Kai Li, Lichen Wang, Bineng Zhong, and Yun Fu. Image super-resolution using very deep residual channel attention networks. In *Proceedings of the European Conference on Computer Vision (ECCV)*, pp. 286–301, 2018c.

Yulun Zhang, Yapeng Tian, Yu Kong, Bineng Zhong, and Yun Fu. Residual dense network for image super-resolution. In *Proceedings of the IEEE conference on computer vision and pattern recognition*, pp. 2472–2481, 2018d.

Zheng Zhang, Yong Xu, Jian Yang, Xuelong Li, and David Zhang. A survey of sparse representation: algorithms and applications. *IEEE access*, 3:490–530, 2015.

Maria Zontak, Inbar Mosseri, and Michal Irani. Separating signal from noise using patch recurrence across scales. In *Proceedings of the IEEE Conference on Computer Vision and Pattern Recognition*, pp. 1195–1202, 2013.

Barret Zoph and Quoc V Le. Neural architecture search with reinforcement learning. In *International Conference on Learning Representations (ICLR)*, 2016.

Daniel Zoran and Yair Weiss. From learning models of natural image patches to whole image restoration. In *2011 International Conference on Computer Vision*, pp. 479–486. IEEE, 2011.

A APPENDIX

A.1 MORE IMPLEMENTATION DETAILS

We summarize the value of λ, i.e. hyper-parameter that controls the magnitude of the cost term, for different experiments in Table 9. The insert positions of ACLA in the searched models are also displayed in the same table. Since RCAN constitutes 10 residual groups, we insert ACLA module after each of the residual group in the corresponding super network. For experiments with EDSR, ACLA modules are inserted after each residual block in the super network. Note that 16-layer EDSR is used for Image Denoising, Image Demosaicing, and Image Compression Artifacts Reduction.

Table 9: Search settings for ACLA in different experiments

Task	Backbone	Value of λ	Insert Positions
Single-Image Super-Resolution	EDSR	0.15	3, 12, 26, 31, 32
Single-Image Super-Resolution	RCAN	0.3	1, 3, 5, 9
Image Denoising	EDSR	0.2	2, 7, 9, 13, 15
Image Demosaicing	EDSR	0.2	2, 5, 11, 14, 16
Image Compression Artifacts Reduction	EDSR	0.2	2, 7, 10, 13, 14

A.2 IMAGE DEMOSAICING

To demonstrate the effectiveness of our proposed CLA and ACLA on various image restoration tasks, we add an experiment on image demosaicing. The evaluation is conducted on Kodak24, McMaster (Zhang et al., 2017b), BSD68, and Urban100, following the settings in RNAN (Zhang et al., 2019). We compare our approach with IRCNN (Zhang et al., 2017b), RNAN (Zhang et al., 2019), and PANet (Mei et al., 2020). We also use 16-layer EDSR as the baseline CNN model. As shown in Table 10, our approach yields the best reconstruction result for image demosaicing.

Table 10: Quantitative results on benchmark datasets for image demosaicing

Method	Params(M)	McMaster18		Kodak24		BSD68		Urban100	
		PSNR	SSIM	PSNR	SSIM	PSNR	SSIM	PSNR	SSIM
Mosaiced	-	9.17	0.1674	8.56	0.0682	8.43	0.0850	7.48	0.1195
IRCNN	0.731	37.47	0.9615	40.41	0.9807	39.96	0.9850	36.64	0.9743
RNAN	7.409	39.71	0.9725	43.09	0.9902	42.50	0.9929	39.75	0.9848
PANet	5.957	40.00	0.9737	43.29	0.9905	42.86	0.9933	40.50	0.9854
Baseline	5.430	39.81	0.9730	43.18	0.9903	42.66	0.9931	40.23	0.9852
CLA	5.896	40.03	0.9739	43.35	0.9906	42.88	0.9934	40.52	0.9853
ACLA	5.914	**40.08**	**0.9742**	**43.38**	**0.9908**	**42.90**	**0.9936**	**40.55**	**0.9857**

A.3 VISUALIZATION OF SELECTED KEYS BY ACLA

We present more examples on visualization of selected keys by ACLA in Figure 4 to demonstrate the superiority of our method over Non-local Attention. Similar to Figure 2, the first row shows the positions of the keys selected by ACLA with $K = 16$. For comparison, the positions of keys with top-16 attention weights following the vanilla Cross-Layer Non-Local attention formulation in Equation (3) is diplayed in the second row. From left to the right are the sampled key positions from the 3rd, 12nd, 26th, and 31st resblock.

A.4 VISUAL RESULTS

We present some visual results of our proposed methods for $4\times$ SR with BI degradation model in Figure 5. The visual results of CLA and ACLA are from our experiments with EDSR backbone.

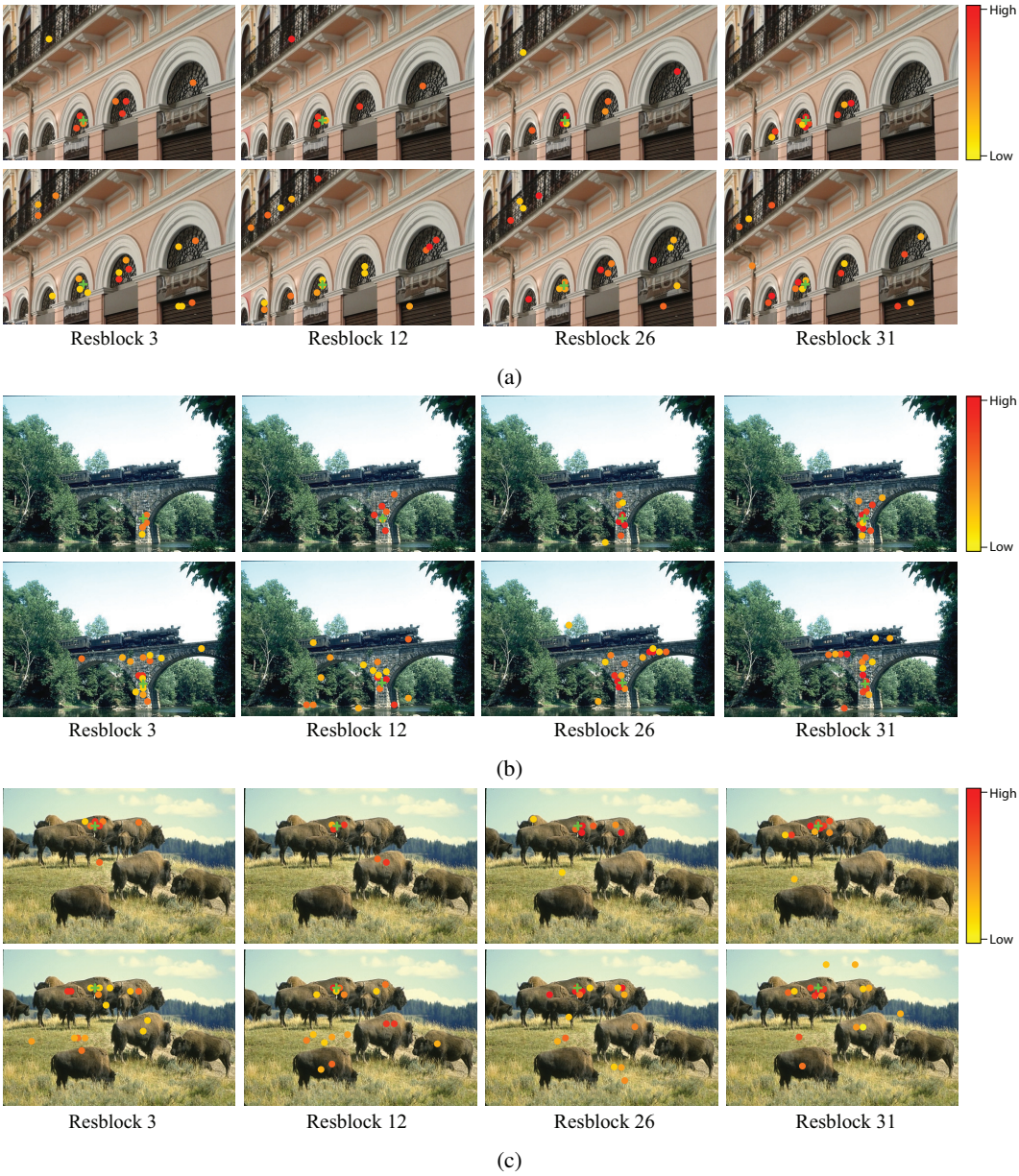

Figure 4: Visualization of selected keys by ACLA

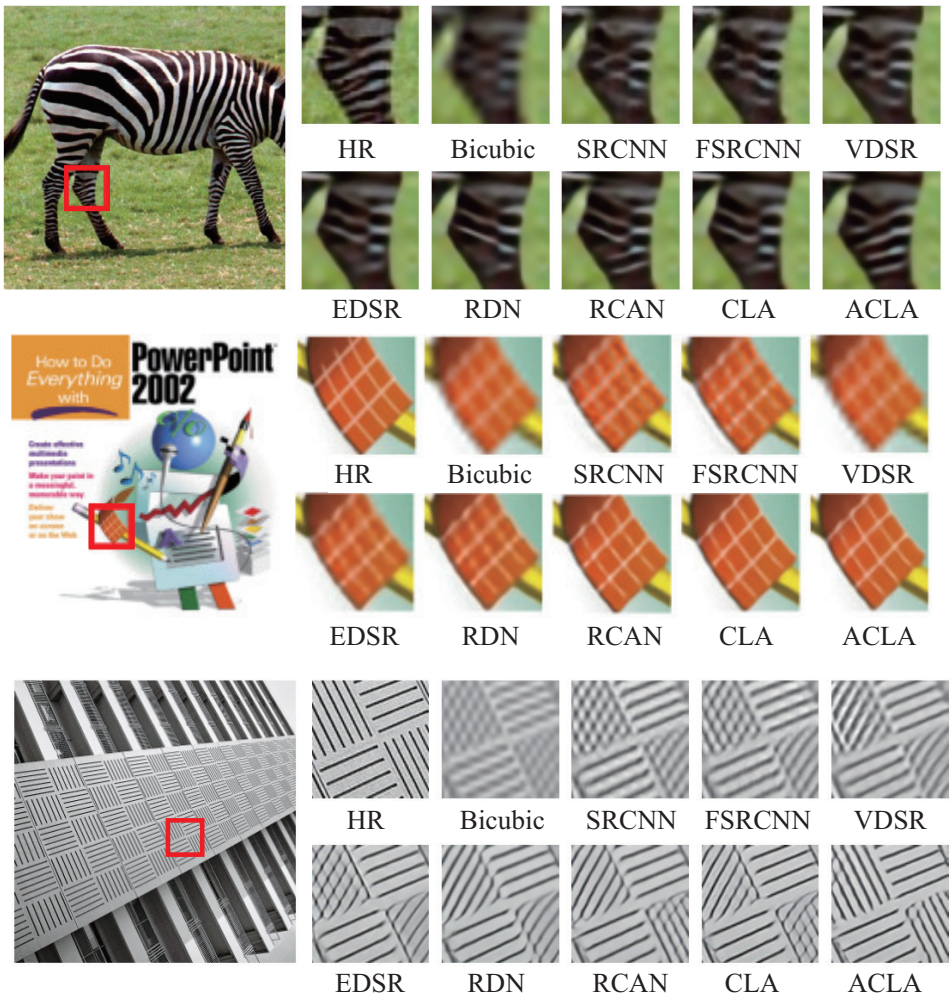

Figure 5: Visual comparison for 4× SR with BI degradation model.