Meta-Learning to Teach Semantic Prompts for Open Domain Generalization in Vision-Language Models

Anonymous authors
Paper under double-blind review

Abstract

Open Domain Generalization (ODG) addresses the challenges posed by domain and category shifts between labeled training sources and unlabeled target domains. Current state-of-the-art methods struggle with the limitations of traditional CNN backbones, leading to reduced generalization and increased error rates in detecting target open samples without prior knowledge. Additionally, recent CLIP-based prompt learning approaches fail to distinguish between known and unknown classes effectively, resulting in suboptimal performance. To address these challenges, we propose MetaPrompt, which leverages the semantic strengths of the vision-language model CLIP and the "learning-to-learn" capabilities of Meta-Learning to achieve robust generalization across domain and category shifts. Our framework introduces three key innovations: First, we approach ODG as a multi-class classification problem that includes both known and novel categories, designing novel prompts capable of detecting unknown class samples across multiple domains. These prompts are trained using Meta-Learning with momentum updates, enabling smooth and accurate differentiation between known and unknown classes. Second, we introduce a novel domain-agnostic semantic attention-based prompt alongside domain-focused prompts to enhance robustness in classifying unknown classes across various domains. Finally, we incorporate an unsupervised contrastive loss during episodic Meta-Training, which reinforces the boundaries in the metric space between known and unknown classes, thereby enhancing "unknown" class awareness in the prompts. MetaPrompt has demonstrated its superiority through extensive testing on diverse datasets, excelling in both closed and open-set DG scenarios and consistently outperforming existing solutions.

1 Introduction

Advancements in deep learning have significantly transformed computer vision tasks such as object detection, segmentation, and classification. However, these models often face challenges with domain shifts, where the distribution of test data (target domain) differs from the training data (source domain). Techniques such as domain adaptation (DA) and domain generalization (DG) have been developed to address this. Domain adaptation (DA) Li et al. (2021); Baktashmotlagh et al. (2013); Singha et al. (2023) focuses on adapting models to new domains using labeled source data and unlabeled or sparsely labeled target data, employing techniques like feature alignment and adversarial training Ganin & Lempitsky (2015a). On the other hand, domain generalization (DG) Li et al. (2019a; 2020); Wang et al. (2021) aims to learn generalized models from multiple source domains to ensure robust performance on unseen target domains without accessing their data during training. Despite these advancements, traditional DA and DG approaches are limited in recognizing novel category samples. These models typically assume that the number of categories remains constant during both training and inference stages. Consequently, they tend to misclassify novel category samples as known training categories during inference, which is impractical for open-world sample recognition. Open domain generalization (ODG) addresses this issue by considering both known category samples and unique samples within its training framework, making it highly relevant for real-world applications like autonomous driving and remote sensing. However, research targeting ODG remains relatively scarce. Methodologies such as DAML Shu et al. (2021) and MEDIC Wang et al. (2023b) integrate meta-learning techniques to enhance

classifier reliability for training classes in the context of ODG. Nonetheless, these approaches encounter challenges when dealing with diverse open-world data and limited adaptability. This paper aims to explore and address these challenges, proposing novel strategies to improve the robustness and adaptability of models in open-world environments.

Vision-language models such as CLIP Radford et al. (2021) and ALIGN Jia et al. (2021) have emerged as robust solutions for various computer vision tasks. CLIP, in particular, leverages vast image and text datasets to create comprehensive embedding spaces through multi-modal contrastive training, excelling in zero-shot and few-shot learning scenarios. Despite its success, CLIP faces challenges in domain generalization due to overfitting and the limitations of traditional prompt tuning, which often fails to enforce cross-domain generalization. This shortcoming underscores the need for more robust prompt learning strategies adaptable to diverse and unknown domains. In recent research on open domain generalization (ODG), most methods focus on either the one-against-all classifier approach or the threshold-dependent approach, which determines whether a sample is out of distribution based on specific thresholding of the probability scores. Even the latest CLIP-based prompt engineering methods, such as CoOp Zhou et al. (2022b), CoCoOp Zhou et al. (2022a), StyLIP Bose et al. (2024), and MaPLe Khattak et al. (2023a), fail to adequately address the ODG problem due to the misalignment of text prompt embeddings with the concept of novel or unknown classes. CLIPN Wang et al. (2023a) introduces a negative concept by introducing 'no' words for text inputs of CLIP that capture the corresponding negation semantics of images for out-of-distribution (OOD) tasks.

To address these limitations, we propose a novel methodology using meta-learning to make the prompt embeddings aware of the textual term 'unknown', enabling them to detect or segregate open samples from closed counterparts. This approach aims to enhance the robustness and adaptability of vision-language models in handling open-domain environments, contributing to the broader field of domain generalization. Our motivation of using CLIP for ODG stems from the need to address these limitations by leveraging its multi-scale features. We aim to generate semantically aware tokens for prompt learning. This facilitates better alignment between image and prompt characteristics to enhance the model's ability to handle open and closed-set classification tasks. To achieve this, we propose MetaPrompt, a model trained in a meta-training setup inspired by model-agnostic meta-learning (MAML) Finn et al. (2017). Inspired by ODG-CLIP Singha et al. (2024), where a pretrained stable-diffusion model is leveraged to generate open-set samples and perform prompt learning to classify novel classes as 'unknown', we focus on robust prompt tuning and improved visual feature extraction in MetaPrompt . This dual focus ensures balanced performance across known and unknown classes, providing a cohesive solution to the challenges of ODG and setting a new benchmark for generalization in unseen and diverse domains. We state our contributions as follows:

- We introduce a novel meta-learning-based prompt learning method, MetaPrompt, for open domain generalization.
- We leverage the multi-scale image features of the pre-trained CLIP to generate the BatchNorm statistics. Additionally, we propose the semantic attention block (SemAtt) that helps generate more semantically meaningful prompt tokens and improves clustering between open-set and closed-set classes.
- Our extensive experiments showcase the efficacy of MetaPrompt for the ODG task on six benchmark datasets. We also surpass the state-of-the-art closed-set domain generalization methods by a significant margin.

2 Related Works

2.1 Open-Set Recognition (OSR)

The OSR challenge, which aims to effectively identify novel-class samples using only training exemplars from closed-set classes, has become a focal point of research Bendale & Boult (2016); Kong & Ramanan (2021); Pal et al. (2023); Vaze et al. (2021). In this pursuit, generative OSR approaches have emerged as promising strategies. These methods augment the training set with artificially synthesized categories, enhancing the model's ability to generalize and recognize novel-class samples during evaluation Du et al. (2022); Ge et al. (2017); Zhou et al. (2021a). Moreover, recent advancements in vision-language models, such

as CLIP, have presented new opportunities for tackling the OSR challenge. CLIPN, for instance, introduces a novel negative prompt learning strategy leveraging CLIP's capabilities Wang et al. (2023a). This approach has demonstrated superior performance compared to existing alternatives Fort et al. (2021); Ming et al. (2022), highlighting the potential of vision-language models in open set recognition tasks.

Open-Set Domain Adaptation (OSDA): Open Set Domain Adaptation (OSDA) operates in a transductive cross-domain environment similar to Open Set Recognition (OSR), adopting an OSR-like scenario. Typically, OSDA addresses the presence of out-of-distribution samples by either randomly combining input images or using GAN-based models to generate pseudo-open data Kong & Ramanan (2021); Mancini et al. (2020b). However, these generated images often lie on a lower-dimensional manifold in open space and lack rich semantics. Discriminative models, on the other hand, employ metric learning, reconstruction loss, or the confidence of closed-set classifiers to identify open data Chen et al. (2021); Yoshihashi et al. (2019). CLIPN Wang et al. (2023a) introduced a novel negative prompt learning strategy for OSR using CLIP, significantly outperforming other vision-language model-based methods Fort et al. (2021); Ming et al. (2022). Nonetheless, these models struggle to handle distribution shifts between test and training domains.

Open Domain Generalization: Open Domain Generalization (ODG) presents more complex challenges than Open Set Recognition (OSR) and Open Set Domain Adaptation (OSDA) due to its inductive nature and lack of information about the target domain. ODG in supervised learning requires models to generalize across unseen target distributions without prior exposure to the target domain during training, pushing the boundaries of model generalization capabilities. Early domain generalization (DG) research focused on domain adaptation (DA) models to address domain distribution discrepancies. Domain augmentation reduces these discrepancies by generating synthetic domains and integrating them into the existing domain set, enhancing model generalization. The field has advanced with diverse DG strategies, including self-supervised, ensemble, and meta-learning.

The notion of ODG was first introduced in Shu et al. (2021), extending domain-augmented meta-learning. MEDIC Wang et al. (2023b) proposes a comprehensive approach, including domain and class-wise gradient matching, to establish a balanced decision boundary across closed-set classes. ODG-Net Bose et al. (2023) synthesizes images using disentangled style and content information and trains an open-set classifier. Recent studies by Zhu & Li (2021) and Yang et al. (2022) have expanded the ODG framework to include single-source domain scenarios. Recently, Singha et al. (2024) has introduced a new language-guided paradigm to solve the ODG problem in the vision-language modeling (VLM) perspective using an unknown class prompt. This is the first work in ODG with VLM using CLIP, and our proposed method also counterparts the VLM with a meta-learning method. These developments highlight the ongoing evolution of ODG methodologies as researchers strive to improve models' ability to generalize without prior target domain knowledge.

2.2 Meta Learning

Meta-learning approaches have been effectively addressing the learning of deep learning models under data-scarce scenarios and can be classified into metric-based methodsVinyals et al. (2017);Snell et al. (2017), model-based methodsMishra et al. (2018);Graves et al. (2014) and gradient-based learning methodsRavi & Larochelle (2016); Nichol et al. (2018). Model-agnostic meta-learning (MAML)Finn et al. (2017) is the gradient-based learning approach in which the model can adapt to new tasks with minimal fine-tuning after being trained on various tasks. In Domain generalization, meta-learning is efficiently utilized to tackle the domain shifts. Li et al. (2018) proposes MAML-based domain generalization (MLDG), where the model is trained on different source domains and tested on unseen target domains. Zhao et al. (2023), utilized meta prompt learning, where the parameters are regularised after every update to make the model generalizable to unseen domains. Li et al. (2023), GRAM learns prompt initialization and a gradient regulating function for cross-domain generalization.

2.3 Vision Language Models and Prompt Learning

Multi-modal vision-language models (VLMs) have significantly advanced image recognition tasks with minimal task-specific fine-tuning. VLMs such as CLIP Radford et al. (2021) and VisualBERT Li et al. (2019b) use advanced language models like BERT Devlin et al. (2018) and GPT Radford et al. (2018) alongside con-

volutional neural networks and vision transformers Vaswani et al. (2017) for visual analysis. Traditionally, VLMs relied on manually crafted textual prompts, which can be complex and tiresome. Prompt learning methods Zhou et al. (2022b;a); Bulat & Tzimiropoulos (2023); Khattak et al. (2023a) have gained traction for tailoring prompts effectively for downstream tasks by treating token embeddings as learnable variables constrained by image features.

Recently, CLIP has been employed to tackle challenges in domain adaptation (DA) Singha et al. (2023) and domain generalization (DG) Zhang et al. (2021); Bose et al. (2024). However, CLIP's text encoder, trained with positive instances, fails to recognize instances with negation. To address this, CLIPN Wang et al. (2023a) introduces a "no-text encoder" that assimilates out-of-distribution (OOD) samples. ODG-CLIP Singha et al. (2024) assigns OOD samples from diverse unseen domains to the "unknown" class and applies prompt learning, generating open-set samples using stable-diffusion controlled by positive and negative prompts. *In our proposed* MetaPrompt *, we aim to perform open-set DG with meta-learning, focusing on learning domain-agnostic features for prompt learning.*

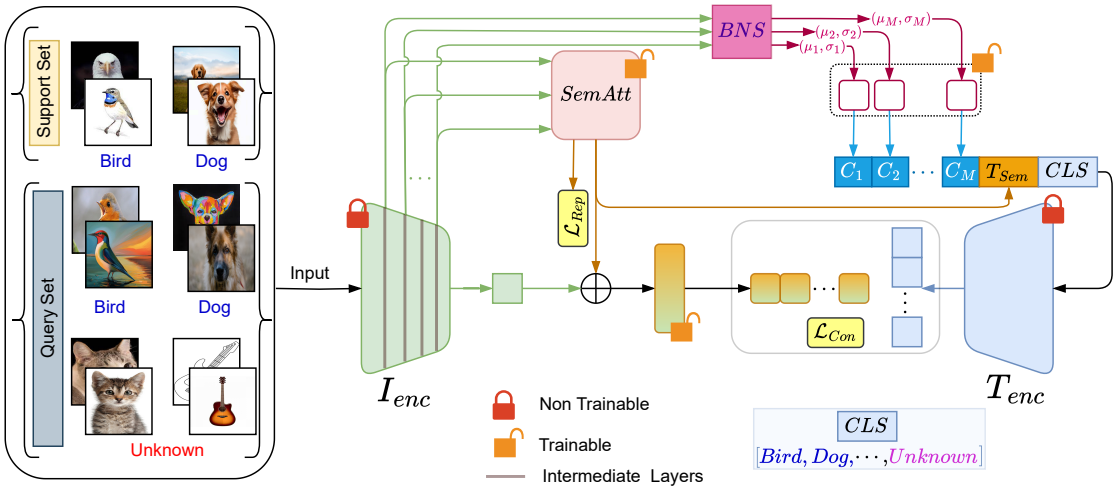

Figure 1: The architecture of our proposed MetaPrompt , where I_{enc} and T_{enc} denote the image and text encoders from the frozen pre-trained CLIP, respectively. We extract the BatchNorm features from the BatchNorm Statistics block (BNS). Also, we perform the prompt learning using the context tokens C_M and the semantic token T_{Sem} produced from the semantic attention block ($SemAtt$, shown in Fig 2).

3 Methodology

This section first discusses the mathematical notation and goals of open domain generalization (ODG). Afterwards, we explain our proposed methodology and network optimization in Sections 3.2 and 3.3, respectively.

3.1 Preliminaries

ODG aims to develop a model that can generalize to a new or unseen target domain using data from M different source domains. Let $\mathcal{X}$ denote the input space and $\mathcal{Y}$ represent the label space. We denote the samples from the source domains as $\{\mathcal{D}^{\mathcal{S}^i}\}_{i=1}^{M}$, where $\mathcal{D}^{\mathcal{S}^i} = \{(x_j^{\mathcal{S}^i}, y_j^{\mathcal{S}^i})\}_{j=1}^{n_i} \sim p_{\mathcal{X}\mathcal{Y}}^{\mathcal{S}^i}$. Here, $x \in \mathcal{X} \subseteq \mathbb{R}^d$ represents an input image, $y \in \mathcal{Y}$ denotes the class associated with x, and $p_{\mathcal{X}\mathcal{Y}}^{\mathcal{S}^i}$ denotes the joint distribution in the i-th source domain. Each source domain $\mathcal{D}^{\mathcal{S}^i}$ is partitioned into a support set $\mathcal{D}_{sup}^{\mathcal{S}^i}$ and a query set $\mathcal{D}_{que}^{\mathcal{S}^i}$. The support set $\mathcal{D}_{sup}^{\mathcal{S}^i}$ is used for learning the model parameters: $\mathcal{D}_{sup}^{\mathcal{S}^i} = \{(x_{j_{sup}}^{\mathcal{S}^i}, y_{j_{sup}}^{\mathcal{S}^i})\}_{j=1}^{n_{sup}^{\mathcal{S}^i}}$. The query set $\mathcal{D}_{que}^{\mathcal{S}^i}$ is used for evaluating the model's performance: $\mathcal{D}_{que}^{\mathcal{S}^i} = \{(x_{j_{que}}^{\mathcal{S}^i}, y_{j_{que}}^{\mathcal{S}^i})\}_{j=1}^{n_{que}^{\mathcal{S}^i}}$. The goal is to learn a model $f : \mathcal{X} \rightarrow \mathcal{Y}$ that performs well on a new or unseen target domain $\mathcal{D}^{\mathcal{T}} = \{(x_j^{\mathcal{T}}, y_j^{\mathcal{T}})\}_{j=1}^{n_{\mathcal{T}}}$ with

joint distribution denoted as $p^{\mathcal{T}}_{\mathcal{XY}}$. Also, source and target domains follow different distributions such as $p^{\mathcal{S}}_{\mathcal{XY}} \neq p^{\mathcal{T}}_{\mathcal{XY}}$. The key challenge in training our MetaPrompt is that $p^{\mathcal{T}}_{\mathcal{XY}}$ is unknown.

3.2 Proposed Methodology

In Figure 1, we present an overview of our proposed MetaPrompt . We utilize the frozen pre-trained encoders of CLIP Radford et al. (2021). Specifically, the image and text encoders are denoted as I_{enc} and T_{enc}, respectively. Motivated by the success of CLIP in domain generalization Zhang et al. (2021); Bose et al. (2024) and domain adaptation Ge et al. (2022); Singha et al. (2023) tasks, our MetaPrompt framework is designed to train a few learnable layers on top of the pre-trained CLIP encoders for the detection of out-of-distribution (OOD) samples under varying target distribution.

Image and text encoding: For input images x, the pre-trained CLIP's image encoder I_{enc} provides the latent image features $I_{enc}(x)$. Additionally, we engineered the pre-trained CLIP image encoder to extract intermediate features from its layers, denoted as $\{I_{enc}\}_{l=1}^{L}$ and pass through the Semantic Attention block Sem_{Att}. We then concatenate both the latent image features and output of Sem_{Att} through operator $\oplus$, which are subsequently passed through a learnable linear layer, denoted as G, for contrastive training with the text features to achieve domain generalization.

The text encoder of CLIP comprises transformer layers, as proposed in Vaswani et al. (2017), which process the image-conditioned features, as depicted in Figure 1. The text features are obtained from the pre-trained text encoder of CLIP by passing M context tokens $[C_1, C_2, \cdots, C_M]$ along with the semantic token T_{sem} and the class tokens $[CLS]$. Precisely, T_{enc} processes the input vector collectively represented as $[C_1, C_2, \cdots, C_M][T_{Sem}][CLS]$, conditioned on the corresponding input image feature $I_{enc}(x)$. As discussed, we utilize the intermediate layers of the pre-trained image encoder I_{enc}, generating attentive features, which we further leverage for prompt learning, as detailed in the subsequent paragraphs.

Domain Agnostic Semantic Attention Sem_{Att}: To learn more abstract domain agnostic semantic features, we propose the semantic attention block, denoted as Sem_{Att} in Figure 1, which takes the intermediate features of the pre-trained image encoder of CLIP. The detailed understanding of our proposed domain agnostic semantic attention block is shown in Figure 2, which consists of upsampling layers for dimension matching between the features of intermediate layers of pre-trained CLIP image encoder I_{enc} followed by the convolutional layer. After that, we use flatted the obtained convolution maps via global average pooling layer GAP, which finally served at three instances, i.e., final visual latent space, semantic token T_{sem} for prompt learning, and discovery loss $\mathcal{L}_{Rep}$. We define the semantic token T_{sem} in Equation 1, where it takes the features obtained from the GAP layer and passes through a single linear layer Ω. It is essential to note that the multi-scale features from the intermediate layers of the image encoder of pre-trained CLIP I_{enc} played a crucial role in dismantling the domain agnostic properties across the seen and unseen classes of the target domains.

$$T_{sem} = \Omega\Big(Sem_{Att}(\{I_{enc}\}_{i=1}^{L}(x))\Big) \tag{1}$$

Style-guided Prompt Learning: Here, we discuss the generation of prompt tokens conditioned to the input image features. We divide our prompt generation method into two steps: i) incorporating BatchNorm (BN) features, i.e., style and content information from the input image x, and ii) adding of semantic token T_{sem} for the final prompt generation. As shown in Figure 1, the BatchNorm statistics (BNS) module extracts the (μ_M, σ_M) corresponding to multi-scale features from L intermediate layers of CLIP's image encoder I_{enc} with $M \leq L$. Thereafter, we pass these multi-scale BN features to the learnable layers of the meta networks $\phi_{i=1}^{M}$ for generating the M context tokens $[C_1, C_2, \cdots, C_M]$, mathematically defined in Equation 2.

$$C_m = \phi\Big(BNS(\{I_{enc}\}_{i=1}^{L}(x))\Big)_{j=1}^{M} = \phi_j(\mu_i, \sigma_i)_{i,j=1}^{L,M} \tag{2}$$

where $m \in \{1, M\}$. These style-guided context tokens C_Ms are further appended with the attention-based semantic token T_{sem} obtained from the Sem_{Att} block, defined in Equation 1 and class tokens $[CLS]$. On accumulating these tokens, we pass them through the frozen text encoder of pre-trained CLIP T_{enc}, which

generates the text encoding for contrastive learning with the image encoding $P(x)$. The generated text encoding learns the prompts concerning the known classes and open-set unknown samples, which we called the new class "`unknown`".

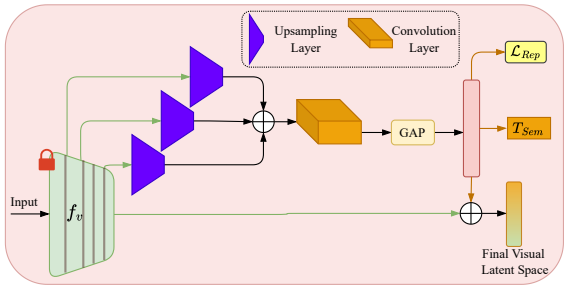

Figure 2: Detailed on the semantic attention block *SemAtt*, which generates the semantic token T_{sem} from the intermediate layers of pre-trained CLIP's image encoder, I_{enc}. $\oplus$ and GAP denote the concatenation operator and global average pooling, respectively.

Algorithm 1: Pseudocode for MetaPrompt

Input: θ, θ_{sup}, θ_{que}, α, α_1, α_2
Output: Trained Model weights θ
while no converge **do**
  Sample: $\mathcal{D}^{\mathcal{S}}_{sup}$ and $\mathcal{D}^{\mathcal{S}}_{que}$ sets from $\mathcal{D}^{\mathcal{S}}$
  for n episodes **do**
    $pred_{sup} = \theta(\mathcal{D}^{\mathcal{S}}_{sup})$;
    $\theta_{sup} \leftarrow \theta - \alpha_1 \times \nabla_{\theta} L_1(pred_{sup}, GT_{sup})$;
    $pred_{que} = \theta_{sup}(\mathcal{D}^{\mathcal{S}}_{sup})$;
    $\theta_{que} \leftarrow \theta - \alpha_2 \times \nabla_{\theta|\theta_{sup}} L_2(pred_{que}, GT_{que})$;
  end for
  Momentum Update: $\theta \leftarrow \alpha\theta_{sup} + (1-\alpha)\theta_{que}$;
end while
return θ

3.3 Meta-learning for ODG

In this section, we discuss the heuristic approach to tackle the Open Domain Generalization (ODG) problem using a meta-learning setup. We define the optimization functions, i.e., the contrastive loss $\mathcal{L}_{Con}$ and the representation loss $\mathcal{L}_{Rep}$, which are integral to our proposed MetaPrompt framework.

3.3.1 Episodic Learning

Episodic learning forms the core of the meta-learning process, where the model is trained on multiple tasks or episodes. Each episode is composed of a support set and a query set. The support set provides the model with examples of tasks, while the query set is used to evaluate the model's generalization capability. By alternating between these sets during training, the model learns to generalize across various tasks, enhancing its ability to deal with unseen classes in ODG.

3.3.2 Functioning of Support and Query Sets in Training MetaPrompt

In the MetaPrompt framework, training is based on the concept of episodic learning, where each episode mimics a task the model may encounter during testing. An episode consists of two key components: a *support set* and a *query set*. The support set serves as a small labeled dataset representing a specific task, allowing the model to learn underlying patterns and relationships between input images and their corresponding labels during each episode. This training helps the model adapt to new tasks by generalizing from the few examples provided, a capability crucial for open-domain generalization (ODG), where handling unseen or unknown classes effectively is essential. Meanwhile, the query set evaluates the model's performance within the same episode by presenting samples not seen during the current training phase. This evaluation assesses the model's ability to generalize from the support set to new, unseen instances—an ability critical in ODG scenarios. By alternating between learning from the support set and being evaluated on the query set, the model improves its generalization capabilities across different tasks, better equipping it to handle novel or unseen data during actual deployment.

3.3.3 Loss Functions

Contrastive Loss ($\mathcal{L}_{Con}$): Contrastive loss aligns text and image embeddings within a shared latent space, which is crucial for tasks involving both modalities. It ensures that embeddings of similar pairs (e.g., text and image from the same class) are close together, while embeddings of dissimilar pairs are far apart.

In MetaPrompt, this loss is applied to both the support and query sets. The goal is to minimize the distance between embeddings of matching pairs and maximize the distance between non-matching pairs. This encourages the model to develop a robust embedding space that effectively generalizes across different tasks and instances.

$$\mathcal{L}_{Con} = \min_{\phi,\Omega,P,\theta} \left(\mathop{\mathbb{E}}_{(x,y)\in p(\mathcal{D}^{\mathcal{S}}_{sup})} -\log p(y|x) + \mathop{\mathbb{E}}_{(x,y)\in p(\mathcal{D}^{\mathcal{S}}_{que})} -\log p(y|x) \right) \tag{3}$$

where $p(y|x)$ is defined in Equation 4 with $< . >$ representing the cosine similarity function and τ as a temperature hyper-parameter.

$$p(y|x) = \frac{\exp^{(<(T_{enc}(\phi(I_{enc}(x))),I_{enc}(x))/\tau>)}}{\sum\limits_{y\in\mathcal{Y}} \exp^{(<(T_{enc}(\phi(I_{enc}(x))),I_{enc}(x))/\tau>)}} \tag{4}$$

Representation Loss ($\mathcal{L}_{Rep}$): The representation loss focuses on enhancing the separability between known and unknown classes. It uses an unsupervised contrastive approach to ensure that samples from the same class are clustered together while those from different classes are pushed apart in the latent space. This loss is particularly important in ODG settings, where the model must distinguish between known classes (which it has seen during training) and open-set classes (which are entirely new). By enforcing clear boundaries in the latent space, the representation loss helps the model avoid confusion between these classes.

$$\mathcal{L}_{Rep} = \frac{1}{|A_{sup}|} \sum_{(i,j\in A_{sup})}^{A_{sup}} l_{i,j} + \frac{1}{|A_{que}|} \sum_{(i,j\in A_{que})}^{A_{que}} l_{i,j} \tag{5}$$

where $l_{i,j} = -\log \frac{e^{(<z_i,z_j>)\tau}}{\sum_{k=1}^{N+M} \mathbb{1}_{[k\neq i]} e^{(<z_i,z_k>)\tau}}$ and $< \cdot >$ denotes the cosine similarity function. Here, z, A_{sup} and A_{que} represent the embedding space, positive pairs in the support set and positive pairs between the support and query sets, respectively. The representation loss $\mathcal{L}_{Rep}$, by enforcing similar samples to cluster together while keeping dissimilar samples apart, further refines the model's ability to distinguish between known and unknown classes.

Total Loss $\mathcal{L}_{Total}$: The total loss function used to train the learnable layers of our proposed MetaPrompt is a combination of the contrastive loss and the representation loss, as defined in Equation 6.

$$\mathcal{L}_{Total} = \mathcal{L}_{Con} + \lambda \mathcal{L}_{Rep} \tag{6}$$

where λ is a hyper-parameter that controls the trade-off between the contrastive and representation losses. By minimizing $\mathcal{L}_{Total}$, the model is trained to not only align the text and image embeddings in the latent space but also to effectively separate known and open-set samples, thereby enhancing its generalization capability in open-domain scenarios.

In Section 3.2, we provide a detailed explanation of the meta-training procedure, along with the training algorithm of our proposed MetaPrompt , which illustrates how these loss functions are utilized during the training process.

4 Experimental Evaluations

Datasets: We evaluate our proposed MetaPrompt with six benchmark datasets for the open-domain generalization, PACS Li et al. (2017b), VLCS Li et al. (2017c), Office-Home Venkateswara et al. (2017), Digits-DG Zhou et al. (2020), Multi-Dataset Shu et al. (2021) and Mini-DomainNet Peng et al. (2019). **Office-Home** Venkateswara et al. (2017) have 15,500 images from 65 classes across four domains, i.e., Art,

Clipart, Product, and Real. **PACS** Li et al. (2017a) contains $\approx$ 10K images of seven classes spanning four domains: Artpaint, Cartoon, Sketch, and Photo. **VLCS** Li et al. (2017c) combines images from PASCAL VOC 2007 Everingham et al. (2010), Caltech Fei-Fei et al. (2004), LabelMe Russell et al. (2008), and SUN Xiao et al. (2010), featuring with five classes. **Digits-DG** Zhou et al. (2020) consists of handwritten digit datasets MNIST LeCun et al. (1998), MNIST-M Ganin & Lempitsky (2015b), SVHN Netzer et al. (2011), and SYN Ganin & Lempitsky (2015b). **Multi-Dataset** Shu et al. (2021) is made up of Office-31, STL-10, Visda2017, and four domains from the DomainNet dataset. Peng et al. (2019): Includes 600K images across six domains—real, painting, clipart, quickdraw, infograph, and sketch—divided into 345 classes, with each domain containing 48K to 172K images.

Architecture Details: We present the architecture overview of our proposed MetaPrompt in Figure 1. The image encoder is based on ResNet-50, and the text encoder utilizes a transformer model. The prompts are learned through a learnable projector, which inputs the BatchNorm features (μ, σ) from intermediate layers of the frozen CLIP image encoder. This learnable projector consists of a single linear layer followed by a ReLU activation layer to generate context tokens, which are then processed by the text encoder to produce the final text embeddings. In addition to the generation of image conditional context tokens $[C_1, C_2, \cdots, C_M]$, we incorporate semantic information of the given input image captured through the *SemAtt* module, which generates the semantic token T_{sem}. The *SemAtt* module uses multi-scale features from the CLIP image encoder (ResNet-50), downsamples them to match the spatial dimensions of the last ResNet-50 layer, and concatenates them, as shown in Figure 2. This concatenated output is processed by a single convolution layer, a ReLU activation layer, and global average pooling (GAP). The GAP layer's output is then passed through a multi-layer perceptron (MLP) to generate the feature embedding corresponding to the input image. This MLP output generates the semantic token T_{sem} through another learnable single-layer MLP for unsupervised representation loss. It creates the final visual latent space by elementwise addition with the ResNet-50 latent space. Including the semantic token T_{sem} leverages global semantic content information for contrastive learning with the final latent visual embedding.

4.1 Meta-training step

We adopt the MAML-based meta-training strategy Finn et al. (2017) for the overall training of our proposed MetaPrompt model. As described in Section 3.2, the overall parameters of MetaPrompt are denoted as $\theta = \theta_s + \theta_q$, where θ_s and θ_q represent the parameters associated with the training models for the support and query sets, respectively. During the optimization of MetaPrompt for each episode, we randomly sample six classes with k samples per class, four of which come from the known classes, and two are treated as pseudo unknown classes, referred to as `'unknown'`. For n episodes, we optimize MetaPrompt following the training steps outlined in Algorithm 1.

The parameter update for θ_q involves training prompt tokens to make the pre-trained CLIP model aware of the concept of `'unknown'`, facilitating the detection of outliers or open-set samples during inference. Meanwhile, the parameter update for θ_s adjusts the prompt for the seen classes during meta-training. The overall model parameters θ are updated as a momentum update of θ_s and θ_q. Consequently, our model parameters θ converge, enabling the model to perform domain generalization in the presence of outliers effectively. We train our MetaPrompt for 20 epochs using the Adam optimizer with an initial learning rate of 10^{-2}, employing a cosine annealing scheduler after ten epochs. Additionally, we set the value of λ (defined in Equation 6) to 0.5. The number of context tokens M is set to four. All experiments are conducted with three different seeds, and the results are reported.

4.2 Comparison to the Literature

This section compares our MetaPrompt with the benchmark baselines for both the open-set DG and closed-set DG. In the case of open-set DG, we consider three types of state-of-the-art baseline methods and compare the performance of our proposed MetaPrompt with them. In type-I, we denote the performances of conventional CNN-based (ResNet-18 specifically) ODG methods such as Cumix Mancini et al. (2020a), MixStyle Zhou et al. (2021b), DAML Shu et al. (2021), ODG-Net Bose et al. (2023), and MEDIC Wang et al. (2023b). In type-II, we evaluate the efficacy of our MetaPrompt against zero-shot CLIP combined with state-of-the-art ODG methods like OpenMax Bendale & Boult (2016) and OSDA Panareda Busto &

Gall (2017). Finally, in type-III, we compare our METAPROMPT with CLIP-based prompt learning methods such as CoOp Zhou et al. (2022b), CoCoOp Zhou et al. (2022a), MaPLe Khattak et al. (2023a), LASP Bulat & Tzimiropoulos (2023), STYLIP Bose et al. (2024), CLIPN Wang et al. (2023a), and ODG-CLIP Singha et al. (2024). To classify the OOD samples, we employ a confidence-driven approach with CoCoOp, MaPLe, PromptSRC, and STYLIP, whereas CLIPN uses a learnable "no" text encoder to identify OOD instances. In contrast, ODG-CLIP considers all novel class samples as a single 'unknown' class.

Additionally, we perform experiments in a closed-set setting using the leave-one-out domain protocol, i.e., $M-1$ domains for training and M^{th} domain for testing. We compare our METAPROMPT against non-CLIP-based methods such as SWAD Cha et al. (2021b), EoA Arpit et al. (2022), DandelionNet Hu et al. (2023), and ODG-Net Bose et al. (2023). We also compare our METAPROMPT with zero-shot CLIP and other prompt learning-based approaches.

Table 1: Comparative analysis for PACS, VLCS, Office-Home, Digits-DG, Multi-Dataset, and Mini-DomainNet in ODG setting on average ACC and HM over all the domain combinations following leave-one-domain-out protocol. We report the best results in **bold**. Results reported in blue color are added for revision.

	Methods	Venue	PACS		VLCS		OfficeHome		Digits-DG		Multi-Dataset		Mini-DomainNet		Average	
			Acc	HM	Acc	HM	Acc	HM	Acc	HM	Acc	HM	Acc	HM	Acc	HM
CNN	Cumix Mancini et al. (2020a)	ECCV'20	57.85	41.05	52.46	50.11	51.67	49.40	58.13	54.20	42.18	46.91	50.27	39.16	52.09	46.81
CNN	MixStyle Zhou et al. (2021b)	ICLR'21	63.35	48.30	52.30	50.61	53.52	49.53	60.23	56.35	42.18	46.91	50.43	40.25	53.67	48.66
CNN	DAML Shu et al. (2021)	CVPR'21	65.49	51.88	53.53	51.59	56.45	53.34	59.51	55.61	46.61	51.71	52.81	43.63	55.73	51.29
CNN	ODG-Net Bose et al. (2023)	TMLR'23	68.80	55.81	57.24	56.09	59.40	56.69	63.85	60.98	49.48	54.56	-	-	59.75	56.83
CNN	MEDIC Wang et al. (2023b)	ICCV'23	89.81	83.03	57.28	55.73	60.26	57.91	83.28	66.30	50.74	53.13	55.29	45.71	66.11	60.30
CLIP	CLIP Radford et al. (2021)	-	95.16	76.77	91.84	72.94	81.43	63.62	77.08	61.95	77.88	72.19	84.50	68.94	84.65	69.40
CLIP	CLIP + OpenMax Bendale & Boult (2016)	-	93.45	79.13	92.09	73.67	81.00	61.54	76.93	62.78	78.34	73.26	81.89	69.40	83.95	69.96
CLIP	CLIP + OSDA Panareda Busto & Gall (2017)	-	92.62	75.40	90.21	70.89	82.58	67.35	80.53	65.70	74.45	75.22	82.00	73.62	83.73	71.36
CLIP	CoOp Zhou et al. (2022b)	IJCV'22	78.77	26.87	92.02	39.26	73.85	36.26	58.54	34.81	66.03	44.34	61.13	68.34	71.72	41.65
CLIP	CoCoOp Zhou et al. (2022a)	CVPR'22	85.76	32.93	89.47	37.01	75.38	34.38	52.77	33.50	64.84	47.57	60.63	56.30	71.48	40.28
CLIP	MaPLe Khattak et al. (2023a)	CVPR'23	93.97	48.47	89.70	43.33	79.47	33.06	70.54	43.83	69.34	62.20	74.67	60.57	79.62	48.58
CLIP	LASP Bulat & Tzimiropoulos (2023)	CVPR'23	88.45	30.37	90.67	39.41	76.13	34.52	60.89	35.23	66.78	50.22	62.34	61.56	74.21	41.89
CLIP	PromptSRC Khattak et al. (2023b)	ICCV'23	94.53	43.32	90.13	42.78	80.21	36.40	75.34	44.25	65.51	59.45	73.60	62.56	79.89	48.13
CLIP	STYLIP Bose et al. (2024)	WACV'24	95.36	50.74	90.75	65.66	84.73	60.97	80.59	58.15	79.88	71.99	80.22	69.11	85.26	62.77
CLIP	CLIPN Wang et al. (2023a)	ICCV'23	96.24	45.00	84.82	50.72	84.55	42.83	81.70	45.56	77.16	62.60	77.38	66.92	83.64	52.27
CLIP	ODG-CLIP Singha et al. (2024)	CVPR'24	**99.53**	99.70	95.71	86.53	**98.32**	96.08	91.53	78.27	84.60	90.00	**95.68**	94.48	94.23	90.84
CLIP	Meta-MaPLe	-	92.35	84.44	89.42	73.56	86.33	78.61	91.23	71.69	81.79	78.75	79.48	69.81	86.77	76.14
CLIP	Meta-STYLIP	-	95.67	88.39	93.25	78.87	91.57	87.35	92.18	72.73	84.23	83.44	86.77	78.08	90.61	81.47
CLIP	Meta-ODG-CLIP	-	99.78	99.95	96.52	88.44	98.66	98.29	92.94	80.16	86.51	92.33	96.43	95.58	95.14	92.45
CLIP	METAPROMPT + Stable Diffusion	-	99.13	99.95	96.53	92.85	97.58	98.89	95.27	83.69	88.65	94.14	96.19	98.79	95.56	94.72
CLIP	METAPROMPT (ours)	-	98.87	**99.89**	**95.94**	**89.79**	96.83	**97.57**	**93.15**	**80.06**	**86.63**	**91.76**	94.75	**96.52**	**94.36**	**92.60**

Table 2: Closed-set domain generalization (leave-one-domain-out) performance on the PACS, VLCS, Office-Home, Digits-DG, and Mini-DomainNet datasets. We report the best results in **bold**.

	Methods	Venue	PACS	VLCS	OfficeHome	Digit-DG	MiniDomainNet	Average
CNN	SWAD Cha et al. (2021a)	NeurIPS'21	88.10	79.10	70.60	-	-	79.27
CNN	EoA Arpit et al. (2022)	NeurIPS'22	88.60	79.10	72.50	-	-	80.07
CNN	DandelionNet Hu et al. (2023)	ICCV'23	89.20	81.60	70.40	-	-	80.40
CNN	ODG-Net Bose et al. (2023)	TMLR'23	90.66	79.85	72.92	86.75	50.16	76.07
CLIP	CLIP Radford et al. (2021)	-	94.89	82.14	78.40	64.59	78.73	79.75
CLIP	CoOp Zhou et al. (2022b)	IJCV'22	97.11	83.34	81.33	77.11	72.30	82.23
CLIP	CoCoOp Zhou et al. (2022a)	CVPR'22	96.54	85.02	81.05	79.36	71.51	82.70
CLIP	MaPLe Khattak et al. (2023a)	CVPR'23	97.72	86.75	83.52	80.25	73.87	84.42
CLIP	LASP Bulat & Tzimiropoulos (2023)	ICCV'23	97.02	87.25	84.13	79.92	70.67	83.80
CLIP	STYLIP Bose et al. (2024)	WACV'24	98.17	87.21	85.94	81.62	80.43	86.67
CLIP	PromptSRC Khattak et al. (2023b)	ICCV'23	98.02	86.34	83.89	82.40	76.10	85.35
CLIP	ODG-CLIP Singha et al. (2024)	CVPR'24	**99.83**	95.74	96.91	96.38	96.65	97.10
CLIP	METAPROMPT (ours)	-	99.17	**95.92**	**97.35**	**96.56**	**97.20**	**97.24**

Open-set DG: In Table 1, we present the performance comparison of our METAPROMPT against state-of-the-art methods for classifying seen and unknown classes in domain generalization. We find that METAPROMPT shows significant improvement over non-CLIP based methods in terms of accuracy and HM scores at least by 28.25% and 32.30% respectively. Built on top of pre-trained CLIP, we evaluate METAPROMPT against zero-shot CLIP, CLIP + OpenMax, and CLIP + OSDA, noting a rise up in accuracy and HM scores at least of 9.71% and 21.24%. In comparison to recent prompt learning approaches, i.e., CoOp, CoCoOp, MaPLe, LASP, and PromptSRC and STYLIP, which is not mainly based on ODG solutions, our METAPROMPT outperforms them by at least 29.83% in terms of a harmonic score of closed and open-set recognition. The most closely related methods to our METAPROMPT are CLIPN and ODG-CLIP. CLIPN

uses a trainable "no" text encoder to distinguish outliers from seen samples. However, it does not directly focus on the ODG problem, and ODG-CLIP is the first CLIP-based VLM, specifically for ODG, solved by using an unknown class prompt. MetaPrompt surpasses the considered baselines with a significant margin of 0.11% and 2.24% on closed-set accuracy and HM scores, respectively, on average over all datasets. When, we combine our method MetaPrompt with the synthetic data generated by the Stable Diffusion process as used in ODG-CLIP, we see an increase in the overall accuracy of the closed-set and the open-set setups. This is due to the diverse generation of open and closed set samples that further helps in meta-learning of the prompts to understand the openness.

Closed-set DG: We report the generalization performance of our MetaPrompt for the closed-set environment in Table 2. We observe a similar trend in performance when comparing MetaPrompt against CNN-based methods: SWAD by 17.97+%, EoA by 17.17+%, DandelionNet by 16.84+%, and ODG-Net by 21.17+%. In addition, MetaPrompt surpasses zero-shot CLIP, CoOp, CoCoOp, MaPLe, LASP, StyLIP, PromptSRC, and ODG-CLIP by 17.5%, 15%, 14.5%, 12.8%, 13.4%, 10.6%, 11.9% and 0.1%, respectively, on the average over the five datasets of DomainBed benchmark. We also find that MetaPrompt outperforms the referred state-of-the-art methods on the VLCS, OfficeHome, Digit-DG, and Mini-DomainNet datasets at least by 0.18%, 0.44%, 0.18% and 0.55%, respectively. The enhanced performance in MetaPrompt can be attributed to improved visual feature extraction and our novel method of prompt learning, which promotes a more cohesive alignment between image and prompt characteristics. By simultaneously tackling both open-set and closed-set classification tasks, we enhance the discriminative nature of the embedding space. This dual focus ensures the model performs well in distinguishing known classes (closed-set) while effectively identifying and handling unknown classes (open-set). This results in a well-balanced and cohesive performance across open-set and closed-set scenarios, a synergy often absent in alternative models.

4.3 Ablation Studies

Importance of different learnable components: We ablate our proposed MetaPrompt to evaluate the effectiveness of its components: representation loss $\mathcal{L}_{Rep}$, the domain-agnostic semantic attention module (Sem_{Att}), and the semantic token (T_{sem}), as shown in Table 3. Omitting $\mathcal{L}_{Rep}$ results in an average HM score of 75.16% across five datasets. Including both $\mathcal{L}_{Rep}$ and Sem_{Att}, but excluding T_{sem}, improves the score by 2.54%. This highlights the significance of $\mathcal{L}_{Rep}$ in enhancing the model's ability to distinguish between known and unknown classes.

Table 3: Ablation of our proposed MetaPrompt with its components on the five benchmark datasets, where w/o denotes the MetaPrompt without the respective component. We report best scores in **bold**.

Components	PACS		VLCS		OfficeHome		Digits-DG		M-Dataset		M-DomainNet		Average	
	Acc	HM	Acc	HM	Acc	HM	Acc	HM	Acc	HM	Acc	HM	Acc	HM
w/o $\mathcal{L}_{Rep}$	93.59	82.55	90.32	72.21	87.68	80.33	91.16	67.49	80.72	73.24	88.46	88.57	88.66	77.40
w/o T_{sem}	95.20	84.49	92.27	75.35	89.94	83.52	92.35	68.36	84.41	76.78	90.28	90.18	90.74	79.78
w/o Sem_{Att}	95.43	88.33	92.54	78.97	90.36	86.75	92.43	71.78	84.56	80.18	91.04	92.35	91.06	83.06
with T_{sem} only	94.56	80.71	90.41	72.03	85.60	81.34	92.04	72.35	80.31	79.27	89.25	86.25	88.70	78.66
MetaPrompt (Full)	**98.87**	**99.89**	**95.94**	**89.79**	**96.83**	**97.57**	**93.15**	**80.06**	**86.63**	**91.76**	**94.75**	**96.52**	**94.36**	**92.60**

Next, we include domain-agnostic semantic information from the Sem_{Att} block, resulting in a 3.5% improvement in classifying open samples compared to the previous setting. Finally, training MetaPrompt with all components results in a significant boost in open-domain generalization. We achieve the highest HM scores across all settings, with improvements of 11.6%, 11.1%, 10.8%, 8.3%, and 11.6% on the PACS, VLCS, OfficeHome, Digit-DG, and Multi-Dataset benchmarks, respectively. These results suggest that incorporating representation loss, semantic tokens, and domain-agnostic semantic information enhances the classification of in-distribution and out-of-distribution samples, effectively bridging the gap between the two.

Comparison with prompt-learning based methods under meta-training setup: MetaPrompt performs consistently better than MaPLe and StyLIP across the five datasets (PACS, VLCS, Office Home, Digits-DG and Multi-Dataset) as shown in Figure 3. This is possible since the SemAtt block generates the T_{Sem} prompt, which encodes the global semantic information and, after being meta-trained, can determine the 'known' or 'unknown' samples. This further influences the overall latent space of the image features towards fine-grained open-set detection. Since in other methods, there are no schemes associated with the latent space of the image and the prompt embeddings, thus their performance is worse compared to our

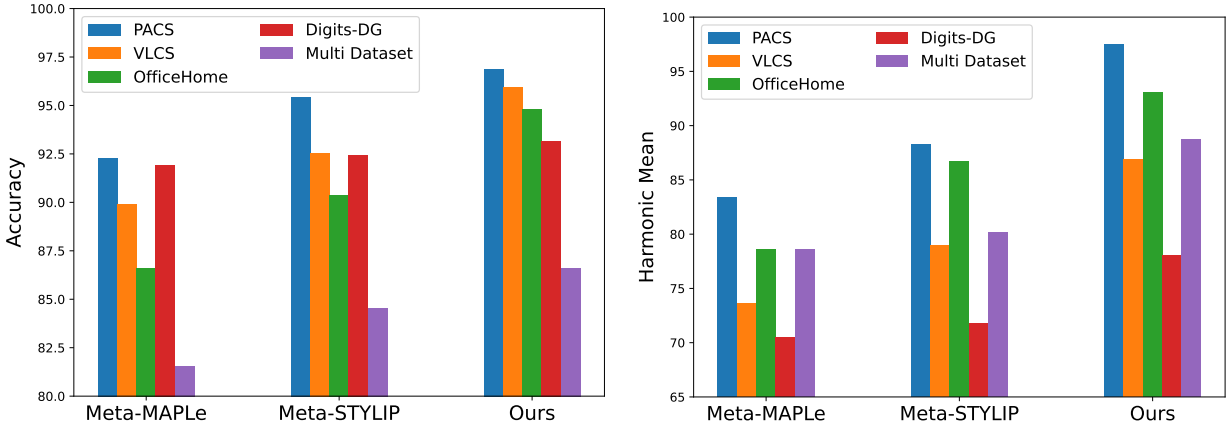

Figure 3: Performance comparison (**Left:** Accuracy, and **Right:** Harmonic Mean) of our proposed MetaPrompt with the meta-learning setup in the MAPLe Khattak et al. (2023a) and StyLIP Bose et al. (2024).

model. In Table 1, we show a complete quantitative analysis of the efficacy of our meta-training setup over the methods MaPLe, StyLIP, and ODG-CLIP. We see that when ODG-CLIP is trained in our meta-training setup, the overall closed and open set accuracy increases compared to the performance of ODG-CLIP without any meta-training. This leads to the conclusion that our meta-training setup is useful to make the learnable prompts distinguish between the close and open samples.

Ablation with varying number of training shots: Our proposed MetaPrompt is trained with fewer samples using a meta-learning-based approach. To evaluate the efficacy of MetaPrompt based on the number of training samples, we conduct experiments with varying numbers of training samples. In Figure 4, we report the accuracy and harmonic mean for different numbers of shots, i.e., 5, 10, 15, and 20, on the PACS, VLCS, OfficeHome, Digit-DG, and Multi-Dataset. We observe that the generalization performance increases with the number of training shots.

Zero-shot openness performance: In Table 4, we show the zero-shot (ZS) performance of our MetaPrompt for detecting unknown classes into clusters of their type, assuming the availability of label information for the unknown classes. The results indicate that our method without meta-training performs poorly compared to our method with meta-training, highlighting the efficacy of the meta-learning approach in detecting and segregating unknown classes using learnable prompts. We also report the per-class open set accuracy performance of MetaPrompt without the representation loss L_{Rep}, observing that unknown class samples fail to form well-clustered groups in the metric space, resulting in poorer performance compared to MetaPrompt with both meta-training and representation loss.

Table 4: Ablation of our MetaPrompt for the Zero-Shot open-set accuracy of each class over the PACS, VLCS, OfficeHome, Digit-DG, and Multi-Dataset. The model is trained in two configurations: once without the Meta-Training algorithm and once without the representation loss L_{Rep}, denoted as w/o.

Methods	PACS	VLCS	OfficeHome	Digits-DG	Multi-Dataset
MetaPrompt w/o meta-training	27.66	19.78	22.67	17.75	23.67
MetaPrompt w/o L_{Rep}	56.64	43.32	53.76	31.49	46.61
MetaPrompt (Full)	**98.24**	**82.49**	**93.37**	**70.16**	**91.99**

t-SNE Visualization for open-sample clustering: In Figure 5, we present the t-SNE visualizations of the metric space for the complete MetaPrompt compared to MetaPrompt without the representation loss L_{Rep}. The left panel shows the t-SNE obtained using MetaPrompt without L_{Rep}, while the right panel depicts the t-SNE from the complete MetaPrompt with L_{Rep}. These visualizations highlight the efficacy of L_{Rep} in separating unknown classes into distinct clusters, thereby improving the detection of out-of-distribution samples.

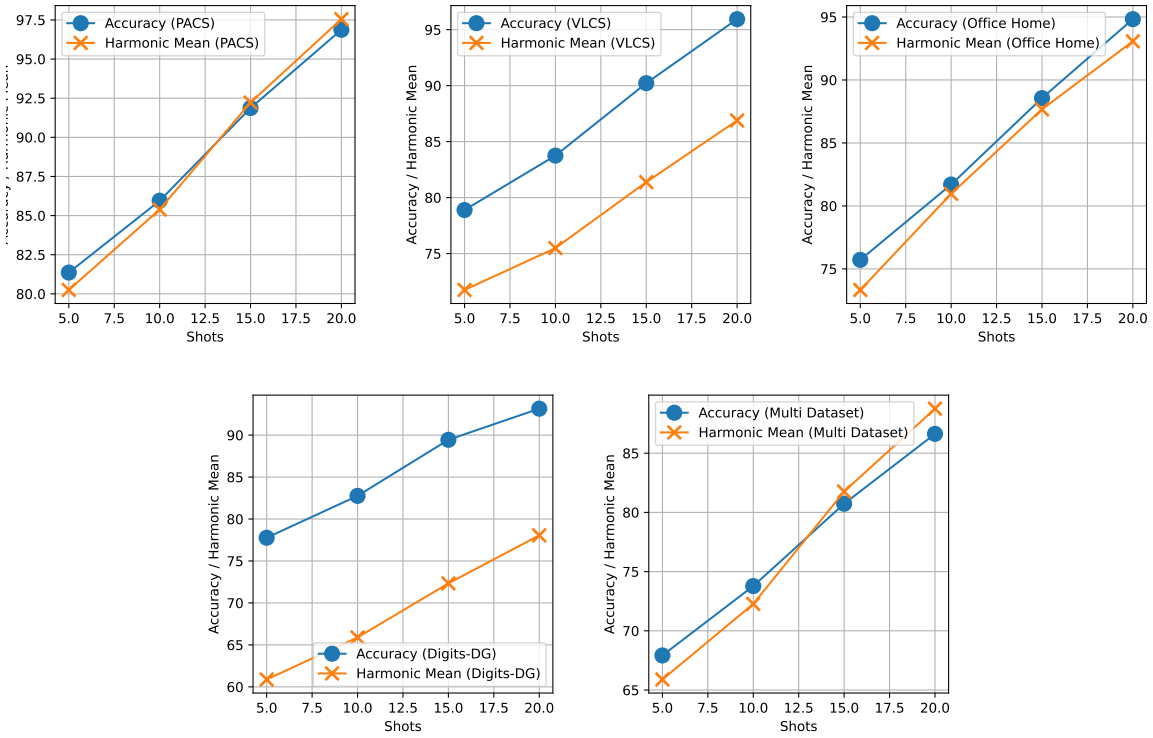

Figure 4: Ablation of our proposed MetaPrompt on varying the number of shots for the five datasets, i.e., PACS, VLCS, OfficeHome, Digit-DG, and Multi-Datasets.

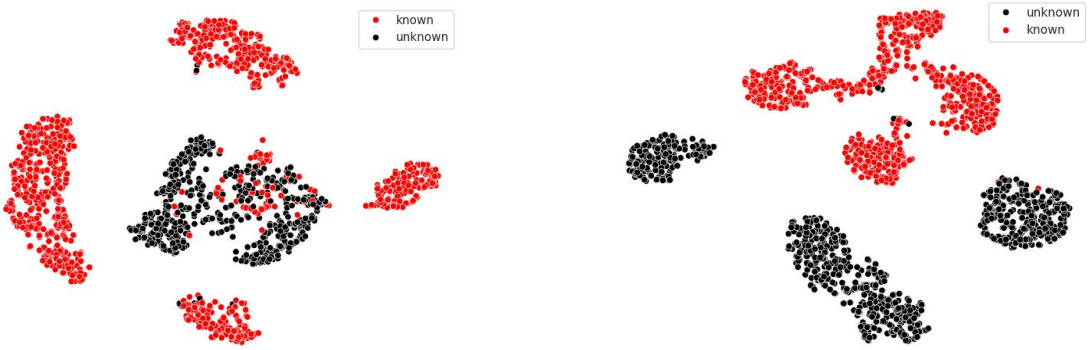

Figure 5: Comparing the t-SNE visualization obtained from our MetaPrompt under the setting of without (**left**) and with (**right**) use of the representation losses defined in Equation 5

Computational Complexity: We provide insights over the computational complexity of our proposed MetaPrompt method. We have demonstrated the efficacy of MetaPrompt in comparison to state-of-the-art ODG methods. Additionally, we provide an analysis of the computational overhead inherent in our MetaPrompt approach for the OfficeHome dataset in the Table 5 below. This shows MetaPrompt have the least number of parameters with the lowest GFLOPS compared to the current state-of-art methods. Thus reducing the overall training time and testing time.

Method	Parameters (#M)	GFLOPs	Training time (min)	Testing time (min)
ODG-CLIP	142	253.6	65	1.3
Meta-ODG-CLIP	156	255.4	70	1.3
Ours	12	47.5	27	0.6

Table 5: Comparison of model methods in terms of parameters, GFLOPs, training time, and testing time.

5 Conclusion and Future Scopes

This paper presents a novel meta-learning-based open-domain generalization method named MetaPrompt. We leverage the pre-trained CLIP model and perform prompt learning constrained on the input image to detect out-of-distribution instances. In MetaPrompt , we extract features from the intermediate layers of CLIP's image encoder to learn BatchNorm statistics, aiding in the adaptation to unseen target domains by learning domain-agnostic features. Additionally, we obtain semantic attention tokens from these intermediate layers to generate semantic-aware context tokens for text embeddings. These tokens are then concatenated with the final image features from CLIP for contrastive training with the text embeddings. Combined with meta-learning, this image-conditioned, semantic-aware prompt learning setup excels in generalizing open-set classification for diverse unseen target distributions. Empirically, we report results for both open-set and closed-set DG scenarios with six benchmark datasets. Our proposed MetaPrompt surpasses all the state-of-the-art methods by a significant margin. In future work, we aim to extend our approach to challenging tasks such as open-set domain generalization for dense prediction and object detection.

References

Devansh Arpit, Huan Wang, Yingbo Zhou, and Caiming Xiong. Ensemble of averages: Improving model selection and boosting performance in domain generalization. *Advances in Neural Information Processing Systems*, 35:8265–8277, 2022.

Mahsa Baktashmotlagh, Mehrtash T Harandi, Brian C Lovell, and Mathieu Salzmann. Unsupervised domain adaptation by domain invariant projection. In *Proceedings of the IEEE international conference on computer vision*, pp. 769–776, 2013.

Abhijit Bendale and Terrance E Boult. Towards open set deep networks. In *Proceedings of the IEEE conference on computer vision and pattern recognition*, pp. 1563–1572, 2016.

Shirsha Bose, Ankit Jha, Hitesh Kandala, and Biplab Banerjee. Beyond boundaries: A novel data-augmentation discourse for open domain generalization. *Transactions on Machine Learning Research*, 2023. ISSN 2835-8856. URL `https://openreview.net/forum?id=jpZmhiIys1`.

Shirsha Bose, Ankit Jha, Enrico Fini, Mainak Singha, Elisa Ricci, and Biplab Banerjee. Stylip: Multi-scale style-conditioned prompt learning for clip-based domain generalization. In *Proceedings of the IEEE/CVF Winter Conference on Applications of Computer Vision*, pp. 5542–5552, 2024.

Adrian Bulat and Georgios Tzimiropoulos. Lasp: Text-to-text optimization for language-aware soft prompting of vision & language models. In *Proceedings of the IEEE/CVF Conference on Computer Vision and Pattern Recognition*, pp. 23232–23241, 2023.

Junbum Cha, Sanghyuk Chun, Kyungjae Lee, Han-Cheol Cho, Seunghyun Park, Yunsung Lee, and Sungrae Park. Swad: Domain generalization by seeking flat minima. *Advances in Neural Information Processing Systems*, 34:22405–22418, 2021a.

Junbum Cha, Sanghyuk Chun, Kyungjae Lee, Han-Cheol Cho, Seunghyun Park, Yunsung Lee, and Sungrae Park. Swad: Domain generalization by seeking flat minima. *Advances in Neural Information Processing Systems*, 34:22405–22418, 2021b.

Guangyao Chen, Peixi Peng, Xiangqian Wang, and Yonghong Tian. Adversarial reciprocal points learning for open set recognition. *IEEE Transactions on Pattern Analysis and Machine Intelligence*, 44(11):8065–8081, 2021.

Jacob Devlin, Ming-Wei Chang, Kenton Lee, and Kristina Toutanova. Bert: Pre-training of deep bidirectional transformers for language understanding. *arXiv preprint arXiv:1810.04805*, 2018.

Xuefeng Du, Zhaoning Wang, Mu Cai, and Yixuan Li. Vos: Learning what you don't know by virtual outlier synthesis. *arXiv preprint arXiv:2202.01197*, 2022.

Mark Everingham, Luc Van Gool, Christopher KI Williams, John Winn, and Andrew Zisserman. The pascal visual object classes (voc) challenge. *International journal of computer vision*, 88(2):303–338, 2010.

Li Fei-Fei, Rob Fergus, and Pietro Perona. Learning generative visual models from few training examples: An incremental bayesian approach tested on 101 object categories. In *2004 conference on computer vision and pattern recognition workshop*, pp. 178–178. IEEE, 2004.

Chelsea Finn, Pieter Abbeel, and Sergey Levine. Model-agnostic meta-learning for fast adaptation of deep networks. In *International conference on machine learning*, pp. 1126–1135. PMLR, 2017.

Stanislav Fort, Jie Ren, and Balaji Lakshminarayanan. Exploring the limits of out-of-distribution detection. *Advances in Neural Information Processing Systems*, 34:7068–7081, 2021.

Yaroslav Ganin and Victor Lempitsky. Unsupervised domain adaptation by backpropagation. In *International conference on machine learning*, pp. 1180–1189. PMLR, 2015a.

Yaroslav Ganin and Victor Lempitsky. Unsupervised domain adaptation by backpropagation. In *International conference on machine learning*, pp. 1180–1189. PMLR, 2015b.

Chunjiang Ge, Rui Huang, Mixue Xie, Zihang Lai, Shiji Song, Shuang Li, and Gao Huang. Domain adaptation via prompt learning. *arXiv preprint arXiv:2202.06687*, 2022.

ZongYuan Ge, Sergey Demyanov, Zetao Chen, and Rahil Garnavi. Generative openmax for multi-class open set classification. *arXiv preprint arXiv:1707.07418*, 2017.

Alex Graves, Greg Wayne, and Ivo Danihelka. Neural turing machines, 2014.

Lanqing Hu, Meina Kan, Shiguang Shan, and Xilin Chen. Dandelionnet: Domain composition with instance adaptive classification for domain generalization. In *Proceedings of the IEEE/CVF International Conference on Computer Vision*, pp. 19050–19059, 2023.

Chao Jia, Yinfei Yang, Ye Xia, Yi-Ting Chen, Zarana Parekh, Hieu Pham, Quoc Le, Yun-Hsuan Sung, Zhen Li, and Tom Duerig. Scaling up visual and vision-language representation learning with noisy text supervision. In *International Conference on Machine Learning*, pp. 4904–4916. PMLR, 2021.

Muhammad Uzair Khattak, Hanoona Rasheed, Muhammad Maaz, Salman Khan, and Fahad Shahbaz Khan. Maple: Multi-modal prompt learning. In *Proceedings of the IEEE/CVF Conference on Computer Vision and Pattern Recognition (CVPR)*, pp. 19113–19122, June 2023a.

Muhammad Uzair Khattak, Syed Talal Wasim, Muzammal Naseer, Salman Khan, Ming-Hsuan Yang, and Fahad Shahbaz Khan. Self-regulating prompts: Foundational model adaptation without forgetting. In *Proceedings of the IEEE/CVF International Conference on Computer Vision*, pp. 15190–15200, 2023b.

Shu Kong and Deva Ramanan. Opengan: Open-set recognition via open data generation. In *Proceedings of the IEEE/CVF International Conference on Computer Vision*, pp. 813–822, 2021.

Yann LeCun, Léon Bottou, Yoshua Bengio, and Patrick Haffner. Gradient-based learning applied to document recognition. *Proceedings of the IEEE*, 86(11):2278–2324, 1998.

Da Li, Yongxin Yang, Yi-Zhe Song, and Timothy M Hospedales. Deeper, broader and artier domain generalization. In *Proceedings of the IEEE international conference on computer vision*, pp. 5542–5550, 2017a.

Da Li, Yongxin Yang, Yi-Zhe Song, and Timothy M Hospedales. Deeper, broader and artier domain generalization. In *Proceedings of the IEEE international conference on computer vision*, pp. 5542–5550, 2017b.

Da Li, Yongxin Yang, Yi-Zhe Song, and Timothy M Hospedales. Deeper, broader and artier domain generalization. In *Proceedings of the IEEE international conference on computer vision*, pp. 5542–5550, 2017c.

Da Li, Yongxin Yang, Yi-Zhe Song, and Timothy Hospedales. Learning to generalize: Meta-learning for domain generalization. In *Proceedings of the AAAI conference on artificial intelligence*, volume 32, 2018.

Da Li, Jianshu Zhang, Yongxin Yang, Cong Liu, Yi-Zhe Song, and Timothy M Hospedales. Episodic training for domain generalization. In *Proceedings of the IEEE/CVF International Conference on Computer Vision*, pp. 1446–1455, 2019a.

Haoliang Li, YuFei Wang, Renjie Wan, Shiqi Wang, Tie-Qiang Li, and Alex Kot. Domain generalization for medical imaging classification with linear-dependency regularization. *Advances in neural information processing systems*, 33:3118–3129, 2020.

Jingjing Li, Erpeng Chen, Zhengming Ding, Lei Zhu, Ke Lu, and Heng Tao Shen. Maximum density divergence for domain adaptation. *IEEE Transactions on Pattern Analysis and Machine Intelligence*, 43 (11):3918–3930, 2021. doi: 10.1109/TPAMI.2020.2991050.

Juncheng Li, Minghe Gao, Longhui Wei, Siliang Tang, Wenqiao Zhang, Mengze Li, Wei Ji, Qi Tian, Tat-Seng Chua, and Yueting Zhuang. Gradient-regulated meta-prompt learning for generalizable vision-language models, 2023.

Liunian Harold Li, Mark Yatskar, Da Yin, Cho-Jui Hsieh, and Kai-Wei Chang. Visualbert: A simple and performant baseline for vision and language. *arXiv preprint arXiv:1908.03557*, 2019b.

Massimiliano Mancini, Zeynep Akata, Elisa Ricci, and Barbara Caputo. Towards recognizing unseen categories in unseen domains. In *European Conference on Computer Vision*, pp. 466–483. Springer, 2020a.

Massimiliano Mancini, Zeynep Akata, Elisa Ricci, and Barbara Caputo. Towards recognizing unseen categories in unseen domains. In *European Conference on Computer Vision*, pp. 466–483. Springer, 2020b.

Yifei Ming, Ziyang Cai, Jiuxiang Gu, Yiyou Sun, Wei Li, and Yixuan Li. Delving into out-of-distribution detection with vision-language representations. *Advances in Neural Information Processing Systems*, 35: 35087–35102, 2022.

Nikhil Mishra, Mostafa Rohaninejad, Xi Chen, and Pieter Abbeel. A simple neural attentive meta-learner, 2018.

Yuval Netzer, Tao Wang, Adam Coates, Alessandro Bissacco, Bo Wu, and Andrew Y Ng. Reading digits in natural images with unsupervised feature learning. 2011.

Alex Nichol, Joshua Achiam, and John Schulman. On first-order meta-learning algorithms, 2018.

Debabrata Pal, Shirsha Bose, Biplab Banerjee, and Yogananda Jeppu. Morgan: Meta-learning-based few-shot open-set recognition via generative adversarial network. In *Proceedings of the IEEE/CVF Winter Conference on Applications of Computer Vision*, pp. 6295–6304, 2023.

Pau Panareda Busto and Juergen Gall. Open set domain adaptation. In *Proceedings of the IEEE international conference on computer vision*, pp. 754–763, 2017.

Xingchao Peng, Qinxun Bai, Xide Xia, Zijun Huang, Kate Saenko, and Bo Wang. Moment matching for multi-source domain adaptation. In *Proceedings of the IEEE/CVF international conference on computer vision*, pp. 1406–1415, 2019.

Alec Radford, Karthik Narasimhan, Tim Salimans, Ilya Sutskever, et al. Improving language understanding by generative pre-training. *https://www.mikecaptain.com/resources/pdf/GPT-1.pdf*, 2018.

Alec Radford, Jong Wook Kim, Chris Hallacy, Aditya Ramesh, Gabriel Goh, Sandhini Agarwal, Girish Sastry, Amanda Askell, Pamela Mishkin, Jack Clark, et al. Learning transferable visual models from natural language supervision. In *International Conference on Machine Learning*, pp. 8748–8763. PMLR, 2021.

Sachin Ravi and H. Larochelle. Optimization as a model for few-shot learning. In *International Conference on Learning Representations*, 2016. URL `https://api.semanticscholar.org/CorpusID:67413369`.

Bryan C Russell, Antonio Torralba, Kevin P Murphy, and William T Freeman. Labelme: a database and web-based tool for image annotation. *International journal of computer vision*, 77(1):157–173, 2008.

Yang Shu, Zhangjie Cao, Chenyu Wang, Jianmin Wang, and Mingsheng Long. Open domain generalization with domain-augmented meta-learning. In *Proceedings of the IEEE/CVF Conference on Computer Vision and Pattern Recognition*, pp. 9624–9633, 2021.

Mainak Singha, Harsh Pal, Ankit Jha, and Biplab Banerjee. Ad-clip: Adapting domains in prompt space using clip. *arXiv preprint arXiv:2308.05659*, 2023.

Mainak Singha, Ankit Jha, Shirsha Bose, Ashwin Nair, Moloud Abdar, and Biplab Banerjee. Unknown prompt the only lacuna: Unveiling clip's potential for open domain generalization. In *Proceedings of the IEEE/CVF Conference on Computer Vision and Pattern Recognition*, pp. 13309–13319, 2024.

Jake Snell, Kevin Swersky, and Richard S. Zemel. Prototypical networks for few-shot learning, 2017.

Ashish Vaswani, Noam Shazeer, Niki Parmar, Jakob Uszkoreit, Llion Jones, Aidan N. Gomez, Lukasz Kaiser, and Illia Polosukhin. Attention is all you need. *CoRR*, abs/1706.03762, 2017. URL `http://arxiv.org/abs/1706.03762`.

Sagar Vaze, Kai Han, Andrea Vedaldi, and Andrew Zisserman. Open-set recognition: A good closed-set classifier is all you need? *arXiv preprint arXiv:2110.06207*, 2021.

Hemanth Venkateswara, Jose Eusebio, Shayok Chakraborty, and Sethuraman Panchanathan. Deep hashing network for unsupervised domain adaptation. In *Proceedings of the IEEE conference on computer vision and pattern recognition*, pp. 5018–5027, 2017.

Oriol Vinyals, Charles Blundell, Timothy Lillicrap, Koray Kavukcuoglu, and Daan Wierstra. Matching networks for one shot learning, 2017.

Hualiang Wang, Yi Li, Huifeng Yao, and Xiaomeng Li. Clipn for zero-shot ood detection: Teaching clip to say no. In *Proceedings of the IEEE/CVF International Conference on Computer Vision*, pp. 1802–1812, 2023a.

Xiran Wang, Jian Zhang, Lei Qi, and Yinghuan Shi. Generalizable decision boundaries: Dualistic meta-learning for open set domain generalization. In *Proceedings of the IEEE/CVF International Conference on Computer Vision*, pp. 11564–11573, 2023b.

Ziqi Wang, Marco Loog, and Jan van Gemert. Respecting domain relations: Hypothesis invariance for domain generalization. In *2020 25th International Conference on Pattern Recognition (ICPR)*, pp. 9756–9763. IEEE, 2021.

Jianxiong Xiao, James Hays, Krista A Ehinger, Aude Oliva, and Antonio Torralba. Sun database: Large-scale scene recognition from abbey to zoo. In *2010 IEEE computer society conference on computer vision and pattern recognition*, pp. 3485–3492. IEEE, 2010.

Shiqi Yang, Yaxing Wang, Kai Wang, Shangling Jui, and Joost van de Weijer. One ring to bring them all: Towards open-set recognition under domain shift. *arXiv preprint arXiv:2206.03600*, 2022.

Ryota Yoshihashi, Wen Shao, Rei Kawakami, Shaodi You, Makoto Iida, and Takeshi Naemura. Classification-reconstruction learning for open-set recognition. In *Proceedings of the IEEE/CVF Conference on Computer Vision and Pattern Recognition*, pp. 4016–4025, 2019.

Xin Zhang, Yusuke Iwasawa, Yutaka Matsuo, and Shixiang Shane Gu. Amortized prompt: Lightweight fine-tuning for CLIP in domain generalization. *CoRR*, abs/2111.12853, 2021. URL `https://arxiv.org/abs/2111.12853`.

Cairong Zhao, Yubin Wang, Xinyang Jiang, Yifei Shen, Kaitao Song, Dongsheng Li, and Duoqian Miao. Learning domain invariant prompt for vision-language models, 2023.

Da-Wei Zhou, Han-Jia Ye, and De-Chuan Zhan. Learning placeholders for open-set recognition. In *Proceedings of the IEEE/CVF conference on computer vision and pattern recognition*, pp. 4401–4410, 2021a.

Kaiyang Zhou, Yongxin Yang, Timothy Hospedales, and Tao Xiang. Learning to generate novel domains for domain generalization. In *European conference on computer vision*, pp. 561–578. Springer, 2020.

Kaiyang Zhou, Yongxin Yang, Yu Qiao, and Tao Xiang. Domain generalization with mixstyle. *arXiv preprint arXiv:2104.02008*, 2021b.

Kaiyang Zhou, Jingkang Yang, Chen Change Loy, and Ziwei Liu. Conditional prompt learning for vision-language models. In *Proceedings of the IEEE/CVF Conference on Computer Vision and Pattern Recognition*, pp. 16816–16825, 2022a.

Kaiyang Zhou, Jingkang Yang, Chen Change Loy, and Ziwei Liu. Learning to prompt for vision-language models. *International Journal of Computer Vision*, 130(9):2337–2348, 2022b.

Ronghang Zhu and Sheng Li. Crossmatch: Cross-classifier consistency regularization for open-set single domain generalization. In *International Conference on Learning Representations*, 2021.