Coupled Segmentation and Edge Learning via Dynamic Graph Propagation

Zhiding Yu*, **Rui Huang***†, **Wonmin Byeon**, **Sifei Liu**, **Guilin Liu**, **Thomas Breuel**, **Anima Anandkumar**, **Jan Kautz**
NVIDIA

Abstract

Image segmentation and edge detection are both central problems in perceptual grouping. It is therefore interesting to study how these two tasks can be coupled to benefit each other. Indeed, segmentation can be easily transformed into contour edges to guide edge learning. However, the converse is nontrivial since general edges may not always form closed contours. In this paper, we propose a principled end-to-end framework for coupled edge and segmentation learning, where edges are leveraged as pairwise similarity cues to guide segmentation. At the core of our framework is a recurrent module termed as dynamic graph propagation (DGP) layer that performs message passing on dynamically constructed graphs. The layer uses learned gating to dynamically select neighbors for message passing using max-pooling. The output from message passing is further gated with an edge signal to refine segmentation. Experiments demonstrate that the proposed framework is able to let both tasks mutually improve each other. On Cityscapes validation, our best model achieves 83.7% mIoU in semantic segmentation and 78.7% maximum F-score in semantic edge detection. Our method also leads to improved zero-shot robustness on Cityscapes with natural corruptions (Cityscapes-C).

1 Introduction

Image segmentation and edge detection have been widely studied as important perception problems. The two problems are closely related. In fact, segmentation subsumes edge detection since any segmentation contour makes a closed boundary of a region. The converse is however not true since general edges do not always form closed contours. Nevertheless, edge detection can serve as an auxiliary task to improve segmentation performance since edges provide important pairwise similarity cues for segmentation. Early works tend to focus on the grouping and contrast of pixels from a perceptual similarity perspective. Martin et al. [1] proposed the Berkeley Segmentation Dataset, a popular benchmark for segmentation and boundary detection that inspired many impactful works in perceptual grouping [2–5]. The recent surge of deep learning renders powerful representations with learned features using convolutional neural networks (CNNs) [6]. This has led to great advances in both areas [7–12], but the two tasks are often considered separately.

In light of the status quo, we consider coupled edge and segmentation learning. Our goal is two-fold: (1) Multi-task learning - being able to produce high quality edge detection and segmentation. (2) Mutual improvement - the two tasks can help each other with non-trivial performance gains. Designing a principled framework is however nontrivial. The key question is how sparse edge signals can be effectively transformed into dense region-level ones to interact with segmentation. To this end, we propose a learnable recurrent message passing layer where semantic edges are considered as explicitly learned gating signals to refine segmentation. An overview of our framework is shown

*Equal contribution. Correspondence to Zhiding Yu <zhidingy@nvidia.com>.
†Work partially done during an internship at NVIDIA.

35th Conference on Neural Information Processing Systems (NeurIPS 2021).

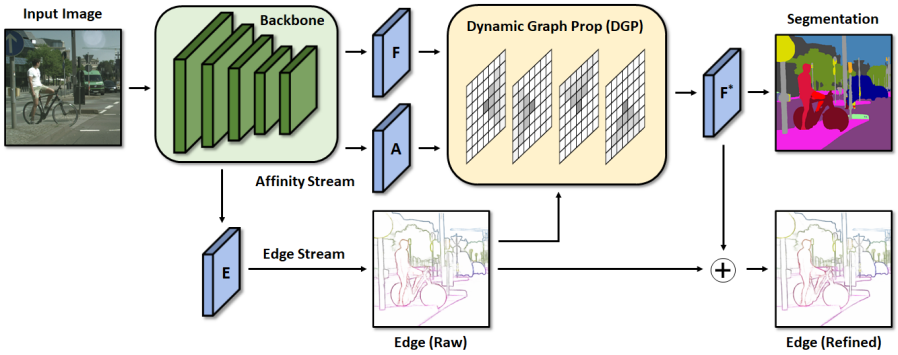

Figure 1: **Framework Overview.** The backbone network provides the encoded features as well as an edge stream that produces a semantic edge map. The DGP layer takes them as inputs and uses learnable message passing to produce a refined feature map (F^*) to predict segmentation and edges.

in Fig. 1. Specifically, the dynamic message passing layer uses affinity gates to select the neighbor for message passing using max-pooling. It conducts message passing sweeps in each of the four directions: left to right, right to left, top to bottom and bottom to top. The message passing is jointly gated by both the affinity and edge gates, therefore allowing edge cues to naturally influence long-range dense predictions. As such, our framework presents a context module that is clean, compact yet powerful. Our technical contributions can be summarized as follows:

- We formulate recurrent message passing as dynamic graph propagation (DGP). We show that such a formulation simplifies the required normalization in propagation networks [13]. It also dynamically finds graph structures that encodes pixel affinities and improves dense prediction.
- We propose a double-gate design where message passing is jointly gated by both the affinity and edge gates to refine the segmentation feature map. We show that this design together with the dynamic 1-way connection in DGP better couples segmentation and edge learning.
- We obtain state-of-the-art results on joint semantic segmentation and edge detection. We also show that DGP leads to strong zero-shot robustness to natural corruptions with significant improvement over prior methods on Corrupted Cityscapes (Cityscapes-C).

Multitasking segmentation and edge learning is desirable for several reasons: 1) There are many downstream applications where both are needed, such as occlusion reasoning [14], localization [15], proposal generation [16–19] and conditional generation [20]. 2) There are many challenging cases where segmentation quality is poor but edge quality is far more superior, e.g. segmentation tends to be inferior near object boundaries since they are often optimized for IoU rather than precision [21]. In these cases, edge learning can potentially capture details missed by segmentation. 3) Implicitly improved model generalization as a result of the coupled learning [22].

2 Related Work

Semantic Segmentation. There is a rich set of prior work in semantic segmentation. Long et al., [7] proposed fully convolutional end-to-end training of semantic segmentation and pointed out its connection to recognition [6]. Chen et al. [8] introduced atrous convolution and atrous spatial pyramid pooling (ASPP) to capture multi-scale image contexts. Another contemporary work is the wide ResNet-38 which explores a relatively shallower but wider backbone [23]. It has also been shown that context plays an important role in segmentation, including context encoding [24, 25], multi-scale context [26–28] as well as relational context [29, 30]. More recently, there has been a surge of interests in segmentation with Transformers [31–34]

Boundary/Edge Detection. Similar to segmentation, boundary/edge detection have been widely studied as perceptual grouping problems in early literature [1–3]. Recent methods tend to resort to CNNs. For example, Bertasius et al. proposed a multi-scale deep network architecture for top-down contour detection, where as Xie et al. [11] further introduced holistically-nested edge detection (HED) for end-to-end edge learning. Besides detecting binary edges, Hariharan et al. [35] proposed

the Semantic Boundaries Dataset (SBD) which has become a popular benchmark for semantic edge detection. Compared to binary edge detection, semantic edge detection involves the semantic classification of edge pixels in addition to localization which presents additional challenges to existing frameworks. A series of works including HFL [36], CASENet [12], SEAL [37] and STEAL [38] have followed up [35] and pushed the boundaries.

Multi-task Segmentation and Edge Learning. Multi-task segmentation and edge learning remains under-studied but is not entirely new. Edges have been pairwise similarity cues to improve segmentation [3, 39, 18] and superpixels [4]. It was shown that edges can be transformed into dense regions through the Laplacian Eigenmaps of boundary transformed affinity [36, 5, 40]. Despite being robust, these methods are generally slow and not end-to-end trainable. For more recent CNN based models, end-to-end multi-task learning on a shared backbone is a natural choice [41]. In addition, proper regularization between segmentation and edge has been shown to improve the performance of both tasks. For example, Takikawa et al. [21] use softmax with temperature to impose consistency between segmentation and semantic edges. Zhen et al. [42] correlate semantic segmentation and edge detection tasks with a consistency loss. Our work goes beyond multi-tasking and let the two task more deeply coupled through dynamic graph propagation.

Structured Dense Prediction. Segmentation is a dense prediction task where structured information can be useful. Structured prediction models such as Markov random fields (MRFs) [43], conditional random fields (CRFs) [44–46] and energy minimization [47, 48] have widely proved helpful in segmentation problems by imposing contrast-sensitive smoothness. In addition, structured inference can also be unfolded as network layers for end-to-end training [49, 50], therefore combining the advantages from both ends. Recently, there is an increasing trend to directly model the message passing process itself using multi-dimensional RNN [51–53], graph RNN [54, 55] and spatial propagation network (SPN) [13, 56, 57]. A common advantage is that these methods render more context-aware prediction with larger receptive fields while preserving local details similar to CRFs. Their ability to train end-to-end allows more powerful representation of inter-pixel similarities and thus better dense prediction quality. Our work can be broadly categorized into this category. It is worth mentioning that the contrast sensitive smoothness term in CRF and propagation networks [52, 13] is an implicit modeling of edge signals by learning to relax smoothness constraints at high contrast areas. There have also been variants of SPN [58] that take binary edge as gate regularization. However, none of these works have explicitly addressed multi-tasking learning with category-aware edges whereas the proposed DGP framework presents a novel and effective solution to this problem.

3 Multi-task network

As a first step towards coupled segmentation and edge learning, we introduce two novel multi-task networks that are able to perform multi-task learning for both segmentation and edge detection. An overview of their architectures is shown in Fig. 2. The rest of the paper follows these notations and covers more details for each module.

Backbone. A CNN giving a semantic feature map (denoted as $\boldsymbol{F}$) encoding the segmentation information. There could be multiple choices of the backbone networks, ranging from the popular architectures of DeepLabv2 [8], DeepLabv3 [27] to latest state-of-the-arts such as DeepLabv3+ [28] and Dual-Attention Network [30]. Adopting powerful backbones will surely benefit the system-level performance, but the major purpose of this work does not completely lie in achieving state-of-the-arts. We are more interested in showing the effectiveness of a proposed framework on standard backbones. To this end, we consider both CASENet [12] and ResNet-38 [23] as the standard backbones for benchmarking. Both of them comprehensively covers the feature map resolutions of 1, $1/2$, $1/4$ and $1/8$, with the last resolution being a rule of thumb adopted by many segmentation networks. For both networks, we adopt atrous spatial pyramid pooling layers with dilation rate $[6, 12, 18, 24, 30, 36]$ to capture context information. We set the output channels to be 128 to produce a semantic feature map, fowllowed by either direct segmentation prediction (baselines) or the proposed DGP layer.

Affinity stream. Convolution layers that aggregate the cross-layer information of the backbone and produces an affinity feature map (denoted as $\boldsymbol{A}$) to encode the affinity of pairwise neighboring pixels. This stream is only used with the presence of recurrent message passing layer (including its related baselines). The stream aims to model the simialrity of pair-wise neighboring pixels and serve as a major input to the gating signal in recurrent message passing layer. Compared to edge stream, the

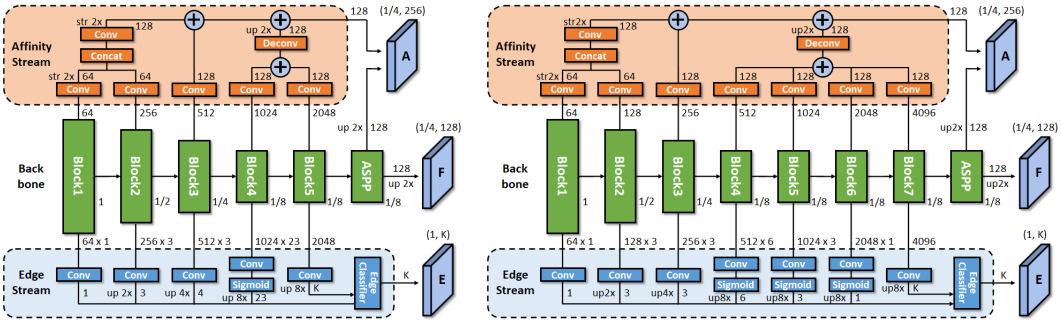

Figure 2: An overview of the architecture for the proposed multi-task Network. Left: architecture with the CASENet backbone. Right: architecture with the ResNet-38 backbone. Each residual block of the backbone is marked with corresponding output scales $(1, 1/2, 1/4, 1/8)$. In addition, the output feature maps $\boldsymbol{A}$, $\boldsymbol{F}$ and $\boldsymbol{E}$ are marked with (scale, channel number). Best viewed in color.

affinity stream seeks to capture coarser-level inter-pixel affinity with slightly deeper convolutions and higher dimensions. The resulting feature map $\boldsymbol{A}$ is a 256 dimensional tensor concatenated by ASPP and the side convolutional feature maps from the affinity stream.

Edge stream. Dense skip-layer features with abundant details that are combined with edge classification layer through shared concatenation [12] to produce a semantic edge map (denoted as $\boldsymbol{E}$). We design an improved edge stream over CASENet [12] to better leverage detail information at multiple scales/levels with dense side connections. Unlike CASENet where the bottom blocks only provide 1-channel side features, we densely obtain side features from every sub-block residual modules. In CASENet, this gives side features with a total number of 31 dimensions. Similar rules apply to ResNet-38, where the side feature has a total number of 17 dimensions We also found that applying sigmoid after side features with resolution $1/8$ greatly benefits edge training from two aspects: (1) It helps to stabilize and prevent gradient explosions from dense skip connections. (2) It removes the typical aliasing edge issue caused by upsampling/deconvolution, and produces elegant smooth edges. Even though we do not explicitly apply techniques such as edge alignment [37] in this work, the proposed backbone is able to produce high quality edge predictions under noisy labels. We also notice that it is better to remove sigmoid for side features with higher resolutions. Edge prediction is multi-tasked alongside with ASPP using 1×1 convolution on top of Res Block5. This returns the K classes coarse edge predictions. Similar to CASENet, we upsample all side features together with the K-dimensional edge predictions to full image resolution and apply shared concatenation, where side features are repetitively shared and concatenated with each class for K times, followed by a K-way 3×3 group convolution to produce semantic edges.

Dynamic graph propagation. Learnable recurrent message passing layer that takes the above three branches as input to produce a refined semantic feature map (denoted as $\boldsymbol{F}^*$). More details regarding this module will be introduced in the next section.

4 Coupled segmentation and edge learning

Although the multi-task network is able to jointly produce segmentation and edge prediction, we are interested in letting these two tasks better coupled to mutually improve each other. To this end, we look into recent spatial propagation networks where edges can be transformed into gating signals that produce long range influence to segmentation. We first give the notations and definitions:

4.1 Notations and Settings

We start with a two-dimensional recurrent network architecture with a linear propagation module passing messages (memories) spatially over a feature map. We define a 4-way message passing: 1. Left→ Right (Mode L), Right→Left (Mode R), Top→Bottom (Mode T) and Bottom→Top (Mode B). Each way of message passing will separately generate a hidden state map $\boldsymbol{H}$ which can be approximately viewed as a refined (smoothed) version of $\boldsymbol{F}$. Finally, we take an element-wise max

operation to ensemble them where the model automatically selects the optimal direction with highest neural activation for each pixel:

$$\boldsymbol{F}^* \leftarrow \boldsymbol{H} \triangleq \max\left(\boldsymbol{H^L}, \boldsymbol{H^R}, \boldsymbol{H^T}, \boldsymbol{H^B}\right) \tag{1}$$

To perform message passing in each way, one often needs to pre-define a graph that encodes the message passing paths. For tractability and and computation issues, such graph is often sparsely defined with locally connections between immediate neighboring pixels. We follow spatial propagation network (SPN) [13] by defining a three-way local connection, as illustrated on the hand side of Fig. 3. The advantage of such design is obvious: Taking Mode R propagation as an example, one just needs to initiate the message passing from the right most column, and recurrently pass the message from right to left column by column. In this case, the hidden state of each pixel is directly influenced by the three immediate neighboring pixels on the right column. Details of the propagation under Mode R is illustrated on the left hand side of Fig. 3.

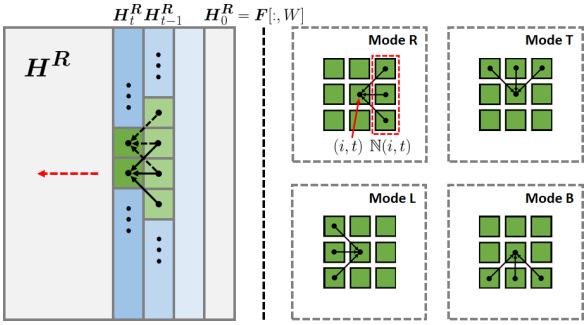

Figure 3: Illustration of spatial propagation. Left: propagation under Right→Left mode. Right: the defined graphs and neighbors of different propagation modes.

Let $\boldsymbol{F} \in \mathbb{R}^{H\times W\times C}$ be the feature map input to the propagation module, $\boldsymbol{H} \in \mathbb{R}^{H\times W\times C}$ the propagation latent space on top of $\boldsymbol{F}$. In addition, let $\boldsymbol{h}_{i,t}$ and $\boldsymbol{f}_{i,t}$ denote the hidden state and feature of the i th pixel located at recurrence t[3] on $\boldsymbol{H}$ and $\boldsymbol{F}$, respectively. We denote $\{\boldsymbol{p}_{i,t}^k | k \in \mathbb{N}(i,t)\}$ the set of learnable propagation gating weights for hidden state $\boldsymbol{h}(i,t)$ where $\mathbb{N}(i,t)$ is the set of neighbors of pixel (i,t). In this case, the spatial propagation in each mode is defined as:

$$\boldsymbol{h}_{i,t} = \left(1 - \sum_{k\in\mathbb{N}(i,t)} \boldsymbol{p}_{i,t}^k\right) \odot \boldsymbol{f}_{i,t} + \sum_{k\in\mathbb{N}(i,t)} \boldsymbol{p}_{i,t}^k \odot \boldsymbol{h}_{k,t-1} \tag{2}$$

where $\odot$ is element-wise product, and $\boldsymbol{h}_{k,t-1}$ is the hidden state of pixel (i,t)'s neighbors from the previous recurrence. $\{\boldsymbol{p}_{i,t}^k | k \in \mathbb{N}(i,t)\}$ is expandable to an affinity matrix, revealing the global and dense message passing among all the pixels of $\boldsymbol{F}$.

4.2 Dynamic graph propagation (DGP)

As a linear module, the above operation requires careful normalization of among $\{\boldsymbol{p}_{i,t}^k | k \in \mathbb{N}(i,t)\}$. In particular, $\sum_{k\in\mathbb{N}(i,t)} \boldsymbol{p}_{i,t}^k \leq 1$ should be satisfied since the energy of the hidden state signal gets unbounded easily under the recurrence operation. To normalize the gating weights, one may consider a linear self-normalization scheme [13] where the constraint $\sum_{k\in\mathbb{N}(i,t)} |p_{i,t}^k| \leq 1$ is imposed to guarantee the stableness of the propagation[4] via dividing each $p_{i,t}^k$ with $\sum_{k\in\mathbb{N}(i,t)} |p_{i,t}^k|$.

But the above formulation also leads to certain limitations. For example, the linear form allows $p_{i,t}^k$ to be both positive and negative, which potentially encourages $p_{i,t}^k$ to be large towards either positive or negative side rather than being monotonic. In addition, when $p_{i,t}^k \geq 0$, $\sum_{k\in\mathbb{N}(i,t)} \boldsymbol{p}_{i,t}^k = 1$ which means that such formulation considers zero unary input from $\boldsymbol{f}_{i,t}$. Therefore, another choice is to constrain $p_{i,t}^k$ with a probabilistic output:

$$\boldsymbol{p}_{i,t}^k = \frac{\exp(\hat{\boldsymbol{p}}_{i,t}^k)}{\sum_{k\in\mathbb{N}(i,t)} \exp(\hat{\boldsymbol{p}}_{i,t}^k)} \odot \sigma(\hat{\boldsymbol{p}}_{i,t}^k), \tag{3}$$

where $\hat{\boldsymbol{p}}_{i,t}^k$ is defined as:

$$\hat{\boldsymbol{p}}_{i,t}^k = \boldsymbol{W}_{\boldsymbol{a}}^\top [\boldsymbol{A}_{i,t}; \boldsymbol{A}_{k,t-1}], \tag{4}$$

[3]There is a one-to-one correspondence between (i,t) and pixel index (h,w). But the mapping varies subject to the propagation mode. In Mode R for example, t corresponds to column with $w = W - t$ whereas $h = i + 1$.

[4]Similar property holds when the same constraint is applied to each dimension of $\boldsymbol{p}_{i,t}^k$ in Equation (2).

and $\sigma(\cdot)$ is the Sigmoid function. Note that $\hat{\boldsymbol{p}}^k_{i,t}$ is the raw gating activation without normalization, and is obtained via a linear projection on the concatenated affinity stream features.

The above formation satisfies both $\sum_{k\in\mathbb{N}(i,t)} \boldsymbol{p}^k_{i,t} \leq 1$ and $\boldsymbol{p}^k_{i,t} \geq 0$, while partially considering the unary input with the Sigmoid term. Yet the framework is a bit complicated with many non-linear terms. To this end, we take one more step to further sparsifying and simplifying the gating response by considering a softmax-with-temperature formulation and taking the limit of $T \to 0$:

$$\boldsymbol{p}^k_{i,t} = \lim_{T\to 0} \frac{\exp(\hat{\boldsymbol{p}}^k_{i,t})/T}{\sum_{k\in\mathbb{N}(i,t)} \exp(\hat{\boldsymbol{p}}^k_{i,t})/T} \odot \sigma(\hat{\boldsymbol{p}}^k_{i,t}) \tag{5}$$

Substituting Equation (5) into Equation (2), we have:

$$\boldsymbol{h}_{i,t} = \Big(1 - \sigma(\boldsymbol{p}^*_{i,t})\Big) \odot \boldsymbol{f}_{i,t} \ + \sigma(\boldsymbol{p}^*_{i,t}) \odot \boldsymbol{h}^*_{i,t}, \tag{6}$$

where the n-th dimension of $\boldsymbol{p}^*_{i,t}$ and $\boldsymbol{h}^*_{i,t}$ are defined as:

$$k^* \triangleq \underset{k\in\mathbb{N}(i,t)}{\arg\max}\{\hat{\boldsymbol{p}}^k_{i,t}[n]\} \quad \boldsymbol{p}^*_{i,t}[n] = \hat{\boldsymbol{p}}^{k^*}_{i,t}[n] \quad \boldsymbol{h}^*_{i,t}[n] = \boldsymbol{h}_{k^*,t-1}[n]. \tag{7}$$

Equation (6) essentially leads to a dynamic graph propagation (DGP) framework where one performs message passing on a dynamic graph structure by picking neighbor with the highest response. Intuitively, DGP captures a compact structure that has close relation to directed minimum spanning tree, Chu–Liu/Edmonds' algorithm [59] and the recently proposed tree filters [60, 61]. Such structure presents an inductive bias that benefits segmentation by filtering out noisy prediction and following only strong signals. Figure 4 illustrates DGP where we show three example paths on three feature channels. Each channel independently takes different paths depending on its own neighbor affinities.

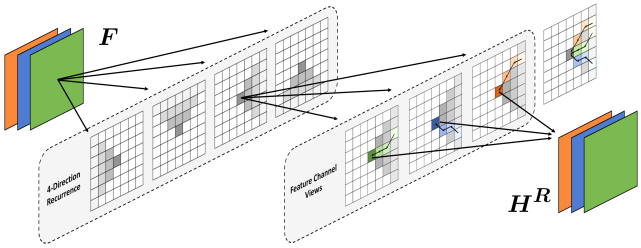

Figure 4: Illustration of dynamic graph propagation.

4.3 Coupling edge prediction with segmentation

To deeply couple edge prediction with segmentation, we further incorporate edge signal into the above dynamic graph propagation by proposing a double-gate framework:

$$\boldsymbol{h}_{i,t} = \Big(1 - \sigma(\boldsymbol{p}^*_{i,t}) \odot \sigma(\boldsymbol{g}_{i,t})\Big) \odot \boldsymbol{f}_{i,t} + \sigma(\boldsymbol{p}^*_{i,t}) \odot \sigma(\boldsymbol{g}_{i,t}) \odot \boldsymbol{h}^*_{i,t}, \tag{8}$$

where $\boldsymbol{g}_{i,t}$ is defined as:

$$\boldsymbol{g}_{i,t} \triangleq \boldsymbol{W_e} * \boldsymbol{E}[i-1:i+1, t-1:t+1] \tag{9}$$

Note that the edge gating signal is obtained by via a 3×3 convolution on the K-channel edge activation map $\boldsymbol{E}$, which outputs a vector $\boldsymbol{g}$ sharing the same dimension (128) as $\boldsymbol{p}^*$. This way, edges are able to actively influence segmentation via edge-sensitive gating on message passing.

We also hope that the refined segmentation activation after DGP can alternatively serve as a shape regularizer of the edge prediction. To this end, we output a K-channel edge regularization feature from $\boldsymbol{F}_m$ using 1×1 convolution, followed by another 3×3 convolution to fuse with $\boldsymbol{E}$ to produce a refined edge map $\boldsymbol{E}^*$. This is illustrated in Fig. 1 on the bottom right. One shall see that the above coupled design let the two tasks greatly improve each other, and we term the final framework CSEL.

4.4 Training loss

The training loss for CSEL is a multi-task combination of cross-entropy (BCE) losses for multi-label edge learning and the cross-entropy (CE) loss for segmentation:

$$\mathcal{L} = \mathcal{L}_{Seg} + \mathcal{L}_{Edge} = \mathcal{L}_{CE}(\text{Conv}(\boldsymbol{F}^*)) + \lambda(\mathcal{L}_{BCE}(\boldsymbol{E^*}) + \mathcal{L}_{BCE}(\boldsymbol{E})) \tag{10}$$

where λ is the parameter controlling the weight of segmentation loss. For segmentation, we use a 3×3 convolution to linearly project the 128-channel activation $\boldsymbol{F}^*$ into a K-channel before the loss.

5 Experiments

5.1 Datasets and metric

Cityscapes. Cityscapes [62] contains 2975 training images, 500 validation images and 1525 private testing images with 19 pre-defined semantic classes. The dataset has been widely adopted as the standard benchmark for both semantic segmentation and semantic edge detection. Following a number of previous works [12, 37, 38, 21], we comprehensively conduct ablation and quantitative studies for both segmentation and edge detection on the validation set.

SBD. The Semantic Boundaries Dataset [35] contains both category-level and instance level semantic segmentation annotations. The dataset contains 11355 images (8498 for training and 2857 for testing) from the trainval set of PASCAL VOC2011 [63], and follows the 20-class VOC definition.

PASCAL VOC 2012 [64] is a semantic segmentation dataset with 1464 (training) and 1449 (val) and 1456 (test) images. We use the augmented dataset with 10582 training images, as in [28]. The dataset contains 20 foreground object classes and 1 background class.

COCO Panoptic [10] contains the mask annotations for both things and stuff, with a split setting (118K train 2017 images and 5K validation 2017 images) following the detection community.

Evaluation metrics. For evaluation, We consider intersection-over-union (IoU) for segmentation, and the maximum F-score (MF) at optimal dataset scale (ODS) for edge detection[5]. We also consider the boundary F-score proposed in [21] for direct comparison on edge detection task.

5.2 Implementation details

Data loading. During training, we unify the training crop size as 1024×1024 for Cityscapes, 472×472 for SBD and VOC12, and 464×464 for COCO Panoptic. All models are trained with 150k iterations on Cityscapes with batch size 8, 30k iterations on SBD and VOC12 with batch size 16, and 220k iterations on COCO Panoptic with batch size 16. We also perform data-augmentation with random mirror, scaling (scale factors in $[0.5, 2.0]$) and color jittering.

Optimization. we apply an SGD optimizer with a weight decay of 5×10^{-4} during training. For baselines and methods that involving CSEL, we additionally apply a second ADAM optimizer to the propagation layers. In our case, we empirically found that ADAM optimizer is more capable of optimizing the propagation layers with better performance.

Learning rate and loss. The base learning rates for methods with ResNet-101/ResNet-38 backbones are unified as 3.0×10^{-8}/7.0×10^{-8} across Cityscapes, SBD and VOC12. On COCO Panoptic, the base learning rate is unified as 5.0×10^{-8} for all comparing methods. Unless indicated, the segmentation weight λ in Eq (7) is empirically set it to 0.5 to balance $\mathcal{L}_{Seg}$ and $\mathcal{L}_{Edge}$. We found our method not sensitive to λ, and setting $\lambda = 0.5$ works excellently for all backbones and datasets.

Using Mapillary Vistas. On Cityscapes, a number of literature consider large-scale pretraining on Mapillary Vistas (MV) [65], which is shown to considerably benefit the segmentation performance. Unless indicated, our method does not adopt Mapillary Vistas pre-training for fair comparison.

5.3 Experiments on Cityscapes

Ablation study (semantic segmentation). Table 1 shows the ablation studies on semantic segmentation where we consider apple-to-apple compared methods that are trained following the same backbones and training protocols: 1) **ST**: Single task segmentation network without propagation layer but keeping the 128-channel feature map $\boldsymbol{F}$. 2) **MT**: The same as ST but naively multi-tasking segmentation with edge detection. 3) **SPN** [13]: Implementation of SPN with the 3-way propagation on $\boldsymbol{F}$, where gating signal is computed using the affinity stream $\boldsymbol{A}$. 4) **SPN+Edge**: Coupling SPN with edge learning following exactly the same double gate design. 5) **DGP**: Baseline which

Table 1: Ablation study of Semantic segmentation on Cityscapes validation set.

method	ResNet-101	ResNet-38
ST	77.9	78.55
MT	78.4	79.43
SPN	80.0	-
SPN+Edge	80.4	-
DGP	81.3	-
CSEL$^-$	80.9	-
CSEL	82.8	82.8
CSEL-Ms	**83.7**	**83.4**

[5] we follow [37] by applying exactly the same parameters and settings.

Table 2: Main results of semantic segmentation and semantic edge learning on Cityscapes.

(a) Main semantic segmentation results on the Cityscapes validation set.

Method	Backbone	MV	mIoU
PSPNet [26]	ResNet-101		78.8
DeepLabV3+ [28]	ResNet-101		78.8
CCNet [66]	ResNet-101		80.5
GSCNN [21]	ResNet-101		74.7
DANet [30]	ResNet-101		81.5
RPCNet [42]	ResNet-101		82.1
CSEL	ResNet-101		**83.7**
SGPN [57]	ResNet-38		80.9
GSCNN† [21]	ResNet-38		80.8
VRec-JP (LR) [67]	ResNet-38		81.4
Axial-DeepLab [68]	AxiaiRes-XL		81.1
CSEL	ResNet-38		**83.4**

(b) Main semantic segmentation results on the Cityscapes test set.

Method	Backbone	MV	mIoU
PSPNet [26]	ResNet-101		78.4
PSANet [69]	ResNet-101		80.1
ASPP [27]	ResNet-101		80.1
BFP [58]	ResNet-101		81.4
DA-Net [30]	ResNet-101		81.5
OCR [29]	ResNet-101		81.8
CCNet [66]	ResNet-101		81.9
RPCNet [42]	ResNet-101		81.8
CSEL	ResNet-101		**82.1**
GSCNN	ResNet-38	✓	82.9
CSEL	ResNet-38	✓	**83.5**

(c) Main results of semantic edge detection on the Cityscapes validation set. Results measured by Maximum F-Score (MF) at optimal data scale.

Method	Backbone	MF (IS)	MF (Non-IS)
CASENet [12]	ResNet-101	68.1	68.9
SEAL [37]	ResNet-101	69.1	-
STEAL [38]	ResNet-101	69.7	71.4
RPCNet [42]	ResNet-101	-	78.2
CSEL	ResNet-101	**78.1**	78.3
CSEL	ResNet-38	-	**78.7**

contains the proposed DGP layer without the double gate design. 6) **CSEL$^-$**: Baseline which is the same as CSEL except for removing the edge loss. 7) **CSEL**: Our full method with single scale inference. 8) **CSEL-MS**: CSEL with multiscale inference at $\{0.5, 0.75, 1.0, 1.25, 1.5, 1.75, 2.0\}$. We also consider both instance-sensitive (IS) and non-instance-sensitive (Non-IS) settings where the edge training/evaluation labels are with/without instance-edges.

Discussions. We make sure that the comparisons are apples to apples and fair, by using the same backbones and training recipes (such as learning rate, crop size, batch size, and number of iterations) for all comparing methods.The DGP baseline can be considered as an apples to apples counterpart of SPN, whereas the CSEL$^-$ baseline is a further study to understand whether the improvement in CSEL purely comes from the enriched representation with edge features. One could observe several trends from the results: 1) The proposed multi-task network consistently outperforms its single task counterpart. 2) CSEL outperforms both SPN and SPN+Edge with the dynamic graph propagation and edge gating. 3) The dynamic graph design in DGP alone helps it to achieve 81.3% mIoU, outperforming both SPN and SPN+Edge by 1.3% and 0.9%, respectively. 4) The incorporation of edge guidance with the double gate design further leads to another non-trivial 1.5% improvement. Simply adding the edge feature does not improve the segmentation quality. In fact, CSEL$^-$ is even slightly lower than DGP where no edge features are involved. This reflects the importance of edge signal as a structural guidance than making the representation more expressive.

Comparison to state-of-the-art (semantic segmentation). We also compare CSEL to state-of-the art semantic segmentation models and list the results in Table 2a and 2b. For clarity, we divide to table into two parts with models using the same type of backbone putting together. Among the comparing methods, CSEL obtains the best results using both ResNet-101 and ResNet-38 backbones.

Ablation study (edge detection). We additionally conduct experiments on edge detection. We first show an ablation study in Table 3, where **ST** indicates single-task edge detection network with the proposed edge stream. **MT** indicates naive multi-task training of both segmentation and edge. **MT** leads to slight performance degradation on the edge detection task compared to single-task training on edge detection. However, the degradation is marginal compared to the significant improvement of the edge quality introduced by deep coupling of the two tasks in CSEL. Again, this shows the considerable benefit of coupled learning with both segmentation and edge detection.

Table 3: Ablation study of edge detection on the Cityscapes validation set. Results measured by MF and scaled by %.

Method	Res101 (IS)	Res101 (Cls)	Res38 (Cls)
ST	74.66	74.87	75.42
MT	74.48	74.62	75.38
CSEL	77.58	77.67	78.19
CSEL-Ms	**78.09**	**78.32**	**78.73**

Comparison to state-of-the-art (edge detection). We also compare to state-of-the-art semantic edge detection methods in Table 2c where we present the training/evaluation protocols in two categories (IS and Non-IS) following SEAL. Note that we evaluate the results with the edge thinning protocol. One could see that our method achieves the best performance in both settings with significant performance gain from the coupled edge and segmentation learning, as well as the benefit from the dynamic graph propagation module. Besides the evaluation protocol from SEAL, we also follow a separate edge evaluation protocol from

Table 4: Results of boundary evaluation on Cityscapes validation set following [21]. Results are measured by the boundary F-score at different thresholds.

Method / Threshold	12px	9px	5px	3px
DeepLabV3+ [28]	80.1	78.7	74.7	69.7
GSCNN [21]	81.8	80.7	77.6	73.6
CSEL-Res101	84.9	83.9	81.0	76.9
CSEL-Res38	**86.7**	**85.7**	**83.1**	**79.3**

GSCNN [21] in Table 4, where we used the original evaluation code base from GSCNN. One could observe that in all threshold settings, our CSEL (ResNet-101) outperforms other methods whereas CSEL (ResNet-38) gives additional improvement.

5.4 Experiments on SBD

We also evaluate CSEL on the SBD dataset and compare with previous state-of-the-art semantic edge detection models. The main results are presented in Table 5. Note that we used the re-annotated SBD test set from [37] to pursue more precise semantic edge evaluation. From the table, one could see CSEL outperforms other state-of-the-art methods in both IS and Non-IS settings.

Table 5: Semantic edge detection on the re-annotated SBD test set. Results are measured by MF and scaled by %. † indicates results are reported by [38].

Method	Backbone	MF (IS)	MF (Non-IS)
CASENet [12]	ResNet-101	63.6	63.5†
SEAL [37]	ResNet-101	67.0	66.8†
STEAL [38]	ResNet-101	65.8	68.2
DFF	ResNet-101	68.0	-
CSEL	ResNet-101	**73.1**	**73.2**

5.5 Experiments on PASCAL VOC12

We evaluate CSEL on the PASCAL VOC12 dataset and report the main results of semantic segmentation in Table 6. The performance is evaluated as the mean IoU over the 20 PASCAL VOC classes plus the background class. We compare CSEL with previous competitive methods that are state-of-the-art (DeepLabv3+) or considerably related (SPN/DFN). CSEL achieves considerable improvement these methods.

Table 6: Results on VOC12 validation set.

Method	Backbone	mIoU
DT-EdgeNet [52]	ResNet-101	69.96
SPN (3-way) [13]	ResNet-101	75.28
DFN [41]	ResNet-101	80.60
DeepLabv3+ [28]	ResNet-101	80.57
CSEL	ResNet-101	**83.30**

5.6 Experiments on COCO Panoptic

We further conduct experiments on the full COCO Panoptic dataset. Several earlier methods have reported results on COCO-Stuff 10K which is an earlier version of COCO with much less data. However, this does not lead to significant differences with VOC12 in both the size and the diversity of data. We therefore adopt the full COCO Panoptic dataset which is significantly larger and is widely accepted by the detection and instance/panoptic segmentation communities. We hope that our work present solid baselines that inspires subsequent research on this benchmark.

Table 7: Results on COCO Panoptic val2017.

Method	Backbone	mIoU
ST	ResNet-101	53.95
MT	ResNet-101	54.14
SPN	ResNet-101	56.49
SPN-Edge	ResNet-101	56.51
CSEL	ResNet-101	**57.03**

Specifically, we convert the instance segmentation annotations to semantic segmentation ones, and compare segmentation methods with or without the proposed CSEL module. All comparing methods adopt the same CASENet (ResNet-101) architecture. Other hyperparameters are kept exactly the same. Models are trained on the train2017 split and tested on val2017 with single scale inference.

From the results in Table 7, one could see that adding CSEL leads to consistently improved results over the naïve segmentation baselines. In addition, multi-task learning with both segmentation and edge losses also slightly outperforms the single segmentation. Finally, CSEL slightly outperforms SPN with reduced gain compared to results on Cityscapes. We hypothesize that the reduced gain is partly caused by the noisier mask annotations on COCO Panoptic which makes edge learning more challenging and decreases the edge gate quality.

5.7 Robustness Against Natural Corruptions

We hypothesize that CSEL also brings robustness to the segmentation model. We show that this is the case and empirically verify on Cityscapes-C in Table 8. Specifically, we follow the standard corruption package provided by [70] to corrupt the Cityscapes validation images. This expands the Cityscapes validation set with 16 types of algorithmically generated corruptions from 4 major categories: "Noise", "Blur", "Weather" and "Digital". Each corruption type also contains 5 severity levels, leading to 2500 evaluation images for each type alone[6].

Our result shows that CSEL overall improves the robustness significantly, especially compared to ResNet-38 and GSCNN [21] which share the same backbone. On the other hand, the method does

[6] We only consider level 1-3 for the "Noise" category following [71].

still show some vulnerability to certain type of corruptions, particularly those belonging to the "Noise" category. However, this trend is aligned with ResNet-38 and GSCNN and we hypothesize that it may be partly related to the specific design of ResNet-38 based on this pattern.

Table 8: **Main results on Cityscapes-C.** "DLv3+", "MBv2", "R" and "X" refer to DeepLabv3+, MobileNetv2, ResNet and Xception. The mIoUs of compared methods are reported from [71].

Arch.	Clean	Blur				Noise				Digital				Weather			
		Motion	Defoc	Glass	Gauss	Gauss	Impul	Shot	Speck	Bright	Contr	Satur	JPEG	Snow	Spatt	Fog	Frost
DLv3+ (MBv2)	72.0	53.5	49.0	45.3	49.1	6.4	7.0	6.6	16.6	51.7	46.7	32.4	27.2	13.7	38.9	47.4	17.3
DLv3+ (R50)	76.6	58.5	56.6	47.2	57.7	6.5	7.2	10.0	31.1	58.2	54.7	41.3	27.4	12.0	42.0	55.9	22.8
DLv3+ (R101)	77.1	59.1	56.3	47.7	57.3	13.2	13.9	16.3	36.9	59.2	54.5	41.5	37.4	11.9	47.8	55.1	22.7
DLv3+ (X41)	77.8	61.6	54.9	51.0	54.7	**17.0**	**17.3**	**21.6**	**43.7**	63.6	56.9	51.7	38.5	18.2	46.6	57.6	20.6
DLv3+ (X65)	78.4	63.9	59.1	**52.8**	59.2	15.0	10.6	19.8	42.4	65.9	59.1	46.1	31.4	19.3	**50.7**	63.6	23.8
DLv3+ (X71)	78.6	**64.1**	60.9	52.0	60.4	14.9	10.8	19.4	41.2	68.0	58.7	47.1	**40.2**	18.8	50.4	64.1	20.2
ICNet	65.9	45.8	44.6	47.4	44.7	8.4	8.4	10.6	27.9	41.0	33.1	27.5	34.0	6.3	30.5	27.3	11.0
FCN8s	66.7	42.7	31.1	37.0	34.1	6.7	5.7	7.8	24.9	53.3	39.0	36.0	21.2	11.3	31.6	37.6	19.7
DilatedNet	68.6	44.4	36.3	32.5	38.4	15.6	14.0	18.4	32.7	52.7	32.6	38.1	29.1	12.5	32.3	34.7	19.2
ResNet-38	77.5	54.6	45.1	43.3	47.2	13.7	16.0	18.2	38.3	60.0	50.6	46.9	14.7	13.5	45.9	52.9	22.2
PSPNet	78.8	59.8	53.2	44.4	53.9	11.0	15.4	15.4	34.2	60.4	51.8	30.6	21.4	8.4	42.7	34.4	16.2
GSCNN	80.9	58.9	58.4	41.9	60.1	5.5	2.6	6.8	24.7	75.9	61.9	70.7	12.0	12.4	47.3	67.9	32.6
CSEL (R38)	**82.8**	63.7	**66.4**	44.3	**66.4**	15.1	6.4	17.5	40.4	**79.7**	**66.0**	**78.3**	17.1	**19.5**	41.4	**78.5**	**33.0**

6 Conclusion

We proposed a unified framework for coupled segmention and edge learning. Our work revisits the two long-standing and important perceptual grouping problems - semantic segmentation and edge detection. Our method (CSEL) includes a novel end-to-end multi-task network, a recurrent dynamic graph propagation layer, as well as deep coupling of the two tasks on top on top of them. Finally, results show that careful coupling of the tasks leads to significant improvement on both of them.

Broader Impact

Our method coupled two long-standing important vision problems, semantic segmentation and edge detection, under a unified framework. Besides the various practical benefits from deeply coupling these two tasks, we expect the research to inspire considerable insights, interests and revisits on perceptual grouping, mid-level representations and structured prediction. The result of the research is likely to find diverse scene understanding applications such as autonomous driving and robot navigation. Like many other discriminative recognition models, our method inevitably faces challenges from input data quality and underlying data biases. The model behavior is subject to various factors such as data distributions, domain gaps, label quality and fairness. We encourage researchers to focus on the "in the wild" robustness when the above challenges are present.

Acknowledgement

We thank the NVIDIA GPU Cloud (NGC) team for the computing support of this work. We also thank the anonymous reviewers and the other NVIDIA colleagues who helped to improve this work with discussions and constructive suggestions.

References

[1] David Martin, Charless Fowlkes, Doron Tal, Jitendra Malik, et al. A database of human segmented natural images and its application to evaluating segmentation algorithms and measuring ecological statistics. In *ICCV*, 2001. 1, 2

[2] David R Martin, Charless C Fowlkes, and Jitendra Malik. Learning to detect natural image boundaries using local brightness, color, and texture cues. *IEEE Trans. PAMI*, 2004. 1

[3] Pablo Arbelaez, Michael Maire, Charless Fowlkes, and Jitendra Malik. Contour detection and hierarchical image segmentation. *IEEE Trans. PAMI*, 2010. 2, 3

[4] Piotr Dollár and C Lawrence Zitnick. Fast edge detection using structured forests. *IEEE Trans. PAMI*, 2014. 3

[5] Jordi Pont-Tuset, Pablo Arbelaez, Jonathan T Barron, Ferran Marques, and Jitendra Malik. Multiscale combinatorial grouping for image segmentation and object proposal generation. *IEEE Trans. PAMI*, 2016. 1, 3

[6] Alex Krizhevsky, Ilya Sutskever, and Geoffrey E Hinton. Imagenet classification with deep convolutional neural networks. In *NeurIPS*, 2012. 1, 2

[7] Jonathan Long, Evan Shelhamer, and Trevor Darrell. Fully convolutional networks for semantic segmentation. In *CVPR*, 2015. 1, 2

[8] Liang-Chieh Chen, George Papandreou, Iasonas Kokkinos, Kevin Murphy, and Alan L Yuille. Deeplab: Semantic image segmentation with deep convolutional nets, atrous convolution, and fully connected crfs. *IEEE Trans. PAMI*, 2017. 2, 3

[9] Kaiming He, Georgia Gkioxari, Piotr Dollár, and Ross Girshick. Mask r-cnn. In *ICCV*, 2017.

[10] Alexander Kirillov, Kaiming He, Ross Girshick, Carsten Rother, and Piotr Dollár. Panoptic segmentation. *arXiv:1801.00868*, 2018. 7

[11] Saining Xie and Zhuowen Tu. Holistically-nested edge detection. In *ICCV*, 2015. 2

[12] Zhiding Yu, Chen Feng, Ming-Yu Liu, and Srikumar Ramalingam. Casenet: Deep category-aware semantic edge detection. In *CVPR*, 2017. 1, 3, 4, 7, 8, 9

[13] Sifei Liu, Shalini De Mello, Jinwei Gu, Guangyu Zhong, Ming-Hsuan Yang, and Jan Kautz. Learning affinity via spatial propagation networks. In *NeurIPS*, 2017. 2, 3, 5, 7, 9

[14] Patrik Sundberg, Thomas Brox, Michael Maire, Pablo Arbeláez, and Jitendra Malik. Occlusion boundary detection and figure/ground assignment from optical flow. In *CVPR*, 2011. 2

[15] Xin Yu, Sagar Chaturvedi, Chen Feng, Yuichi Taguchi, T Lee, Clinton Fernandes, and Srikumar Ramalingam. Vlase: Vehicle localization by aggregating semantic edges. In *IROS*, 2018. 2

[16] C Lawrence Zitnick and Piotr Dollár. Edge boxes: Locating object proposals from edges. In *ECCV*, 2014. 2

[17] Pablo Arbeláez, Jordi Pont-Tuset, Jonathan T Barron, Ferran Marques, and Jitendra Malik. Multiscale combinatorial grouping. In *CVPR*, 2014.

[18] Kevis-Kokitsi Maninis, Jordi Pont-Tuset, Pablo Arbeláez, and Luc Van Gool. Convolutional oriented boundaries. In *ECCV*, 2016. 3

[19] Kevis-Kokitsi Maninis, Jordi Pont-Tuset, Pablo Arbeláez, and Luc Van Gool. Convolutional oriented boundaries: From image segmentation to high-level tasks. *IEEE Trans. PAMI*, 2018. 2

[20] Ting-Chun Wang, Ming-Yu Liu, Jun-Yan Zhu, Guilin Liu, Andrew Tao, Jan Kautz, and Bryan Catanzaro. Video-to-video synthesis. In *Advances in Neural Information Processing Systems (NeurIPS)*, 2018. 2

[21] Towaki Takikawa, David Acuna, Varun Jampani, and Sanja Fidler. Gated-scnn: Gated shape cnns for semantic segmentation. In *ICCV*, 2019. 2, 3, 7, 8, 9

[22] Lin Yen-Chen, Andy Zeng, Shuran Song, Phillip Isola, and Tsung-Yi Lin. Learning to see before learning to act: Visual pre-training for manipulation. In *ICRA*, 2020. 2

[23] Zifeng Wu, Chunhua Shen, and Anton Van Den Hengel. Wider or deeper: Revisiting the resnet model for visual recognition. In *Pattern Recognition*, 2019. 2, 3

[24] Hexiang Hu, Zhiwei Deng, Guang-Tong Zhou, Fei Sha, and Greg Mori. Labelbank: Revisiting global perspectives for semantic segmentation. *arXiv:1703.09891*, 2017. 2

[25] Hang Zhang, Kristin Dana, Jianping Shi, Zhongyue Zhang, Xiaogang Wang, Ambrish Tyagi, and Amit Agrawal. Context encoding for semantic segmentation. In *CVPR*, 2018. 2

[26] Hengshuang Zhao, Jianping Shi, Xiaojuan Qi, Xiaogang Wang, and Jiaya Jia. Pyramid scene parsing network. In *CVPR*, 2017. 2, 8

[27] Liang-Chieh Chen, George Papandreou, Florian Schroff, and Hartwig Adam. Rethinking atrous convolution for semantic image segmentation. *arXiv:1706.05587*, 2017. 3, 8

[28] Liang-Chieh Chen, Yukun Zhu, George Papandreou, Florian Schroff, and Hartwig Adam. Encoder-decoder with atrous separable convolution for semantic image segmentation. In *ECCV*, 2018. 2, 3, 7, 8, 9

[29] Yuhui Yuan, Xilin Chen, and Jingdong Wang. Object-contextual representations for semantic segmentation. *arXiv:1909.11065*, 2019. 2, 8

[30] Jun Fu, Jing Liu, Haijie Tian, Zhiwei Fang, and Hanqing Lu. Dual attention network for scene segmentation. In *CVPR*, 2019. 2, 3, 8

[31] Sixiao Zheng, Jiachen Lu, Hengshuang Zhao, Xiatian Zhu, Zekun Luo, Yabiao Wang, Yanwei Fu, Jianfeng Feng, Tao Xiang, Philip HS Torr, et al. Rethinking semantic segmentation from a sequence-to-sequence perspective with transformers. In *CVPR*, 2021. 2

[32] Wenhai Wang, Enze Xie, Xiang Li, Deng-Ping Fan, Kaitao Song, Ding Liang, Tong Lu, Ping Luo, and Ling Shao. Pyramid vision transformer: A versatile backbone for dense prediction without convolutions. *arXiv preprint arXiv:2102.12122*, 2021.

[33] Ze Liu, Yutong Lin, Yue Cao, Han Hu, Yixuan Wei, Zheng Zhang, Stephen Lin, and Baining Guo. Swin transformer: Hierarchical vision transformer using shifted windows. *arXiv:2103.14030*, 2021.

[34] Xiangxiang Chu, Zhi Tian, Yuqing Wang, Bo Zhang, Haibing Ren, Xiaolin Wei, Huaxia Xia, and Chunhua Shen. Twins: Revisiting the design of spatial attention in vision transformers. *arXiv preprint arXiv:2104.13840*, 2021. 2

[35] Bharath Hariharan, Pablo Arbeláez, Lubomir Bourdev, Subhransu Maji, and Jitendra Malik. Semantic contours from inverse detectors. In *ICCV*, 2011. 2, 3, 7

[36] Gedas Bertasius, Jianbo Shi, and Lorenzo Torresani. High-for-low and low-for-high: Efficient boundary detection from deep object features and its applications to high-level vision. In *ICCV*, 2015. 3

[37] Zhiding Yu, Weiyang Liu, Yang Zou, Chen Feng, Srikumar Ramalingam, BVK Vijaya Kumar, and Jan Kautz. Simultaneous edge alignment and learning. In *ECCV*, 2018. 3, 4, 7, 8, 9

[38] David Acuna, Amlan Kar, and Sanja Fidler. Devil is in the edges: Learning semantic boundaries from noisy annotations. In *CVPR*, 2019. 3, 7, 8, 9

[39] Xuming He, Richard S Zemel, and Miguel Á Carreira-Perpiñán. Multiscale conditional random fields for image labeling. In *CVPR*, 2004. 3

[40] Gedas Bertasius, Jianbo Shi, and Lorenzo Torresani. Semantic segmentation with boundary neural fields. In *CVPR*, 2016. 3

[41] Changqian Yu, Jingbo Wang, Chao Peng, Changxin Gao, Gang Yu, and Nong Sang. Learning a discriminative feature network for semantic segmentation. In *CVPR*, 2018. 3, 9

[42] Mingmin Zhen, Jinglu Wang, Lei Zhou, Shiwei Li, Tianwei Shen, Jiaxiang Shang, Tian Fang, and Long Quan. Joint semantic segmentation and boundary detection using iterative pyramid contexts. In *CVPR*, 2020. 3, 8

[43] Charles A Bouman, Ken Sauer, and Suhail Saquib. Markov random fields and stochastic image models. In *1995 IEEE International Conference on Image Processing*, 1995. 3

[44] John Lafferty, Andrew McCallum, and Fernando CN Pereira. Conditional random fields: Probabilistic models for segmenting and labeling sequence data. In *ICML*, 2001. 3

[45] Sanjiv Kumar and Martial Hebert. Discriminative random fields. *IJCV*, 2006.

[46] Philipp Krähenbühl and Vladlen Koltun. Efficient inference in fully connected crfs with gaussian edge potentials. In *NeurIPS*, 2011. 3

[47] Yuri Boykov, Olga Veksler, and Ramin Zabih. Fast approximate energy minimization via graph cuts. *IEEE Trans. PAMI*, 2001. 3

[48] Yuri Boykov and Gareth Funka-Lea. Graph cuts and efficient nd image segmentation. *IJCV*, 2006. 3

[49] Shuai Zheng, Sadeep Jayasumana, Bernardino Romera-Paredes, Vibhav Vineet, Zhizhong Su, Dalong Du, Chang Huang, and Philip HS Torr. Conditional random fields as recurrent neural networks. In *ICCV*, 2015. 3

[50] Guosheng Lin, Chunhua Shen, Anton Van Den Hengel, and Ian Reid. Efficient piecewise training of deep structured models for semantic segmentation. In *CVPR*, 2016. 3

[51] Wonmin Byeon, Thomas M Breuel, Federico Raue, and Marcus Liwicki. Scene labeling with lstm recurrent neural networks. In *CVPR*, 2015. 3

[52] Liang-Chieh Chen, Jonathan T Barron, George Papandreou, Kevin Murphy, and Alan L Yuille. Semantic image segmentation with task-specific edge detection using cnns and a discriminatively trained domain transform. In *CVPR*, 2016. 3, 9

[53] Bing Shuai, Zhen Zuo, Bing Wang, and Gang Wang. Scene segmentation with dag-recurrent neural networks. *IEEE transactions on pattern analysis and machine intelligence*, 40(6):1480–1493, 2017. 3

[54] Xiaodan Liang, Xiaohui Shen, Jiashi Feng, Liang Lin, and Shuicheng Yan. Semantic object parsing with graph lstm. In *ECCV*, 2016. 3

[55] Ashesh Jain, Amir R Zamir, Silvio Savarese, and Ashutosh Saxena. Structural-rnn: Deep learning on spatio-temporal graphs. In *Proceedings of the IEEE Conference on Computer Vision and Pattern Recognition*, pages 5308–5317, 2016. 3

[56] Xiangyu Xu, Deqing Sun, Sifei Liu, Wenqi Ren, Yu-Jin Zhang, Ming-Hsuan Yang, and Jian Sun. Rendering portraitures from monocular camera and beyond. In *ECCV*, 2018. 3

[57] Sifei Liu, Xueting Li, Varun Jampani, Shalini De Mello, and Jan Kautz. Learning propagation for arbitrarily-structured data. In *Proceedings of the IEEE International Conference on Computer Vision*, pages 652–661, 2019. 3, 8

[58] Henghui Ding, Xudong Jiang, Ai Qun Liu, Nadia Magnenat Thalmann, and Gang Wang. Boundary-aware feature propagation for scene segmentation. In *ICCV*, 2019. 3, 8

[59] Yoeng-Jin Chu. On the shortest arborescence of a directed graph. *Scientia Sinica*, 14:1396–1400, 1965. 6

[60] Lin Song, Yanwei Li, Zeming Li, Gang Yu, Hongbin Sun, Jian Sun, and Nanning Zheng. Learnable tree filter for structure-preserving feature transform. In *NeurIPS*, 2019. 6

[61] Lin Song, Yanwei Li, Zhengkai Jiang, Zeming Li, Xiangyu Zhang, Hongbin Sun, Jian Sun, and Nanning Zheng. Rethinking learnable tree filter for generic feature transform. In *NeurIPS*, 2020. 6

[62] Marius Cordts, Mohamed Omran, Sebastian Ramos, Timo Rehfeld, Markus Enzweiler, Rodrigo Benenson, Uwe Franke, Stefan Roth, and Bernt Schiele. The cityscapes dataset for semantic urban scene understanding. In *CVPR*, 2016. 7

[63] M. Everingham, L. Van Gool, C. K. I. Williams, J. Winn, and A. Zisserman. The PASCAL Visual Object Classes Challenge 2011 (VOC2011) Results. http://www.pascal-network.org/challenges/VOC/voc2011/workshop/index.html. 7

[64] Mark Everingham, SM Ali Eslami, Luc Van Gool, Christopher KI Williams, John Winn, and Andrew Zisserman. The pascal visual object classes challenge: A retrospective. *International journal of computer vision*, 111(1):98–136, 2015. 7

[65] Gerhard Neuhold, Tobias Ollmann, Samuel Rota Bulo, and Peter Kontschieder. The mapillary vistas dataset for semantic understanding of street scenes. In *ICCV*, 2017. 7

[66] Zilong Huang, Xinggang Wang, Lichao Huang, Chang Huang, Yunchao Wei, and Wenyu Liu. Ccnet: Criss-cross attention for semantic segmentation. In *Proceedings of the IEEE/CVF International Conference on Computer Vision*, pages 603–612, 2019. 8

[67] Yi Zhu, Karan Sapra, Fitsum A Reda, Kevin J Shih, Shawn Newsam, Andrew Tao, and Bryan Catanzaro. Improving semantic segmentation via video propagation and label relaxation. In *CVPR*, 2019. 8

[68] Huiyu Wang, Yukun Zhu, Bradley Green, Hartwig Adam, Alan Yuille, and Liang-Chieh Chen. Axial-deeplab: Stand-alone axial-attention for panoptic segmentation. In *European Conference on Computer Vision*, pages 108–126. Springer, 2020. 8

[69] Hengshuang Zhao, Yi Zhang, Shu Liu, Jianping Shi, Chen Change Loy, Dahua Lin, and Jiaya Jia. Psanet: Point-wise spatial attention network for scene parsing. In *Proceedings of the European Conference on Computer Vision (ECCV)*, pages 267–283, 2018. 8

[70] Claudio Michaelis, Benjamin Mitzkus, Robert Geirhos, Evgenia Rusak, Oliver Bringmann, Alexander S. Ecker, Matthias Bethge, and Wieland Brendel. Benchmarking robustness in object detection: Autonomous driving when winter is coming. *arXiv preprint arXiv:1907.07484*, 2019. 9

[71] Christoph Kamann and Carsten Rother. Benchmarking the robustness of semantic segmentation models. In *CVPR*, 2020. 9, 10

7 Checklist

1. For all authors...
   (a) Do the main claims made in the abstract and introduction accurately reflect the paper's contributions and scope? [Yes]
   (b) Did you describe the limitations of your work? [Yes] Please see result analysis on Cityscapes-C.
   (c) Did you discuss any potential negative societal impacts of your work? [Yes] Please see Broader Impact.
   (d) Have you read the ethics review guidelines and ensured that your paper conforms to them? [Yes]
2. If you are including theoretical results...
   (a) Did you state the full set of assumptions of all theoretical results? [N/A]
   (b) Did you include complete proofs of all theoretical results? [N/A]
3. If you ran experiments...
   (a) Did you include the code, data, and instructions needed to reproduce the main experimental results (either in the supplemental material or as a URL)? [No] Going through legal approval process at this moment. Will release source code upon approval.
   (b) Did you specify all the training details (e.g., data splits, hyperparameters, how they were chosen)? [Yes] Please refer to implementation details in both the main paper and the supplementary.
   (c) Did you report error bars (e.g., with respect to the random seed after running experiments multiple times)? [No] We observed stable mIoU results for semantic segmentation models.
   (d) Did you include the total amount of compute and the type of resources used (e.g., type of GPUs, internal cluster, or cloud provider)? [Yes] Please refer to appendix.
4. If you are using existing assets (e.g., code, data, models) or curating/releasing new assets...
   (a) If your work uses existing assets, did you cite the creators? [Yes]
   (b) Did you mention the license of the assets? [Yes] The data used in our work is open source and can be used for adademic research.
   (c) Did you include any new assets either in the supplemental material or as a URL? [No]
   (d) Did you discuss whether and how consent was obtained from people whose data you're using/curating? [N/A] The data used in our work is open source and can be used for adademic research.
   (e) Did you discuss whether the data you are using/curating contains personally identifiable information or offensive content? [N/A] The data does not contain personally identifiable information or offensive content.
5. If you used crowdsourcing or conducted research with human subjects...
   (a) Did you include the full text of instructions given to participants and screenshots, if applicable? [N/A]
   (b) Did you describe any potential participant risks, with links to Institutional Review Board (IRB) approvals, if applicable? [N/A]
   (c) Did you include the estimated hourly wage paid to participants and the total amount spent on participant compensation? [N/A]