Does Entity Abstraction Help Generative Transformers Reason?

Anonymous authors
Paper under double-blind review

Abstract

We study the utility of incorporating entity type abstractions into pre-trained Transformers and test these methods on four NLP tasks requiring different forms of logical reasoning: (1) compositional language understanding with text-based relational reasoning (CLUTRR), (2) abductive reasoning (ProofWriter), (3) multi-hop question answering (HotpotQA), and (4) conversational question answering (CoQA). We propose and empirically explore three ways to add such abstraction: (i) as additional input embeddings, (ii) as a separate sequence to encode, and (iii) as an auxiliary prediction task for the model. Overall, our analysis demonstrates that models with abstract entity knowledge performs better than without it. The best abstraction aware models achieved an overall accuracy of 88.8% and 91.8% compared to the baseline model achieving 62.9% and 89.8% on CLUTRR and ProofWriter respectively. However, for HotpotQA and CoQA, we find that F1 scores improve by only 0.5% on average. Our results suggest that the benefit of explicit abstraction is significant in formally defined logical reasoning settings requiring many reasoning hops, but point to the notion that it is less beneficial for NLP tasks having less formal logical structure.

1 Introduction

Transformer language models (TLMs; Vaswani et al. 2017) have enabled rapid progress in natural language processing (NLP). When pre-trained on large corpora (such as the web) to predict the next tokens or a set of masked tokens from an input sequence, TLMs can capture linguistic knowledge (Peters et al., 2018; Goldberg, 2019; Tenney et al., 2019b), and yield state-of-the-art performance on many NLP tasks with little to no task supervision (Devlin et al., 2019; Radford et al., 2018; 2019; Brown et al., 2020). However, it is not clear if these models can capture higher level knowledge such as reasoning skills that can be re-used in arbitrary contexts, and in ways that leverage the compositionality of those skills (Lake & Baroni, 2018; Liška et al., 2018), something logical reasoners can do relatively well on a smaller scale (De Raedt et al., 2007; Fierens et al., 2015). Simple compositional tasks such as SCAN (Lake & Baroni, 2018), CLUTRR (Sinha et al., 2019), and ProofWritter (Clark et al., 2020; Tafjord et al., 2021) can help diagnose the compositional generalization behavior of language models. Recent work on some of these datasets showed that TLMs still struggle to learn reasoning strategies that can be re-used in out-of training distribution settings (Lake & Baroni, 2018; Gontier et al., 2020).

Humans do abstraction to simplify reasoning and become very efficient. This is particularly true in mathematics when manipulating variables instead of numbers. Manipulating abstract concepts allows humans to generalize knowledge across domains. If we look at how logical reasoners operate, we find that they have an important abstraction component (going from grounded entities to higher level concepts) before logical reasoning can start (De Raedt et al., 2007). Going from an original text sequence to its higher-order meaning is an important part of the NLP pipeline (part of it being entity type tagging). Similarly in mathematics, the introduction of generic variables allows to progress in a logical reasoning process without keeping track of every (grounded) atomic entity. Overall, this idea that we call abstraction, seems to be an important part of logical reasoning. Recent work suggests that incorporating external knowledge about grounded entities could improve language models' abilities to reason and generalize (Ji et al., 2017; Zhang et al., 2019; Moosavi et al., 2020; Rosset et al., 2020). However the empirical effect of incorporating generic entity types

remains unclear, especially with recent studies suggesting that pre-trained models already encode some of that linguistic knowledge in their parameters (Hewitt & Manning, 2019; Liu et al., 2019a; Clark et al., 2019; Tenney et al., 2019a). In this work, we study the effect of explicitly providing entity type abstraction *in addition to* the original input to pre-trained Transformers.

We explore and evaluate different ways to incorporate entity type abstraction and observe that some methods are more effective than others. To construct the abstract representation incorporated into TLMs, we leverage entity type information given by fixed pre-trained models. This allows for automatic and reproducible data processing. In general, our approach is the following: given an input sequence, we use an entity tagger to label entity types in the sequence. We then use these labels to construct a copy of the original sequence in which all entities are replaced by their corresponding entity types. This new sequence can then be used as extra input (Sections 3.1 & 3.2) or as extra training signal to the model (Sections 3.3). In particular, we explore three different ways to augment pre-trained Transformers with this abstract knowledge:

1. by combining token embeddings from both the original and the abstract sequence before encoding (Section 3.1) (Figure 1a & 1b).
2. by encoding both the original and the abstract sequence and combining them before decoding the target output (Section 3.2) (Figure 1c & 1d).
3. by adding a second language model head on top of the Transformer decoder to predict the abstract sequence (Section 3.3) (Figure 1e).

A series of controlled experiments on two synthetic datasets show that models having access to abstract knowledge about entity types yield better performance at inference time both when interpolating and extrapolating to unseen lengths of reasoning chains. Since no (non-synthetic) natural language dataset systematically and explicitly requires long chains of reasoning, we used synthetic datasets in which we can control for the degree of compositional generalization required. Nevertheless, in order to understand if the benefits observed could also be applicable in more realistic settings, we ran a series of experiments on two question answering datasets requiring some degrees of multi-hop reasoning. Results on these more natural language datasets show that abstraction aware models are not significantly better than baseline models. We conclude that these "real-world" problems do not have strong enough logical structure to benefit from the abstraction technique and that the pre-trained weights of large language models seem to be "enough" for such natural language tasks, confirming previous results (Goldberg, 2019; Tenney et al., 2019a). It is only when tasked on logical problems that explicitly require reasoning depths unseen during training that abstraction becomes significantly beneficial.

Overall our work contributions are the following:

1. we introduce and compare empirically different ways to incorporate abstraction into pre-trained TLMs.
2. we show that incorporating abstract knowledge can significantly improve compositional generalization to unseen lengths of reasoning chains in multi-step reasoning tasks.
3. we show that abstraction aware models may not benefit much when language is more natural and less procedural.

We hope that our work will inspire future research in the field to look for simple inductive biases that can complement pre-trained models in their quest to achieve logical reasoning at scale.

2 Related Work

Augmenting neural language models with knowledge about entities has been a popular method to improve their functionality. Ji et al. (2017) trained an entity neural language model to predict sequences of entities with an LSTM (Hochreiter & Schmidhuber, 1997). At each sampling step, they predict the next word alongside a categorical variable indicating the current token's entity ID. They obtained lower perplexity and better results on co-reference resolution and entity prediction tasks than a variety of baselines. Similarly, Rosset et al. (2020) trained a GPT2 model (Radford et al., 2019) by giving it access to entity knowledge at the input level and as an additional pre-training loss. Their model achieved better factual correctness on benchmarks such as LAMA (Petroni et al., 2019), and performed better than a baseline GPT2 model in various question answering tasks. Inspired by this work and motivated by the goal of building better

reasoning language models, we instead focus on the prediction of entity *types* rather than entity *identifiers* taken from a fixed list of entities. This allows our solution to be robust to new entities. In addition, we explore and compare different ways to incorporate the entity knowledge in an encoder-decoder architecture.

Besides entity knowledge, other types of explicit information has also been given to language models. Prior work by Swayamdipta et al. (2018); Eriguchi et al. (2017); Nădejde et al. (2017) tried incorporating syntax information into language models by introducing an auxiliary loss to the model. Results show that models trained to also predict syntactic information achieved stronger performances on various tasks such as PropBank semantics and Neural Machine Translation. Inspired by this work, we also introduce an auxiliary loss but to predict entity types, and with an application towards reasoning tasks. Also working with syntax information, Sundararaman et al. (2019) incorporated POS tags into the input embedding of a BERT model. Results show improved BLEU score on machine translation and higher accuracy than baselines on the GLUE benchmark (Wang et al., 2018). Similarly, Sachan et al. (2021) augmented a pre-trained BERT model with a syntax graph neural network in order to encode syntax trees. Their results show that the quality of the trees are highly tied to the performance boost observed. Levine et al. (2020) trained a BERT-like model to learn word senses. They gave their model access to WordNet supersenses at the input level and as an additional training loss. They achieve better performance than other baselines on the SemEval Word Sense Disambiguation task (Raganato et al., 2017). Moosavi et al. (2020) propose to improve robustness to data biases by augmenting the training data with predicate-argument structures. They train a BERT-base model (Devlin et al., 2019) with PropBank-style semantic role labeling (Shi & Lin, 2019) on MultiNLI (Williams et al., 2018) and SWAG (Zellers et al., 2018) datasets. Their results show that incorporating predicate-argument structure in the input sequence (only during training) makes the model more robust to adversarial examples in MultiNLI. More recently, Porada et al. (2021) extended a RoBERTa model (Liu et al., 2019b) with hypernym abstraction based on WordNet to evaluate the plausibility of events. Their model is able to better predict human plausibility judgement than other RoBERTa baselines. **Although different in application, all these prior works leverage the general idea of explicitly giving more abstract knowledge to language models, hence showing how flexible and generic this strategy can be.** We take a similar approach with entity types, but in the hope of improving the reasoning skills of our baseline model.

A flurry of recent work has also examined ways to augment TLMs with entities from external knowledge bases (Zhang et al., 2019; Peters et al., 2019; Févry et al., 2020; Verga et al., 2020). However, most of the time, these solutions rely on external components such as knowledge graphs with pre-trained entity embeddings, and/or an additional memory. While they often use entity linking as a way to perform co-reference resolution, they do not incorporate higher level of abstractions such as entity types like we do here.

3 Introducing Abstraction Inductive Biases

In this section we describe five different ways to incorporate abstraction into a pre-trained encoder-decoder model. Given an input sequence X, we use `spacy` named entity tagger[1] to make a simplified copy X_s of the input. This is a more generic copy of X.

We run the `spacy` recognizer on X to extract entity tags such as *PERSON*, *ORG*, *GPE*, etc... For each entity type, we create n additional vocabulary entries (with randomly initialized embeddings) such as [`PERSON_1`, ..., `PERSON_n`, `ORG_1`, ..., `ORG_n`, ...]. Every token in X is then replaced by their (randomly numbered) entity tag to make the simplified sequence X_s. If the same entity is present multiple times in X, each occurrence will be replaced by the same entity tag in X_s. If no entity is found for a token in X, the original token's text is kept in X_s (*e.g.* "*Bob Smith has a cat that he loves. Bob also loves Alexandra.*" would be transformed into "*PERSON_11 has a cat that he loves. PERSON_11 also loves PERSON_3.*").

We select n greater than one as we believe that for some tasks it is important to differentiate between two entities of the same type. At the same time we select n to be much smaller than the total number of entities in the dataset, thus forcing abstraction. In particular, the hyper-parameter n is set to the smallest possible value such that each distinct entity within the *same* example gets a different entity tag. This is different

[1] https://spacy.io/models/en

Table 1: Different architectures for different abstraction strategies. X (blue) is the original sequence embedding, X_s (green) is the embedding of the simplified sequence with entities replaced by their entity type tags, "*ENC*" is the T5 encoder, H (blue) is the contextualized representation of sequence X, H_s (green) is the contextualized representation of sequence X_s, "*DEC*" is the T5 decoder, and Y is the target sequence to predict.

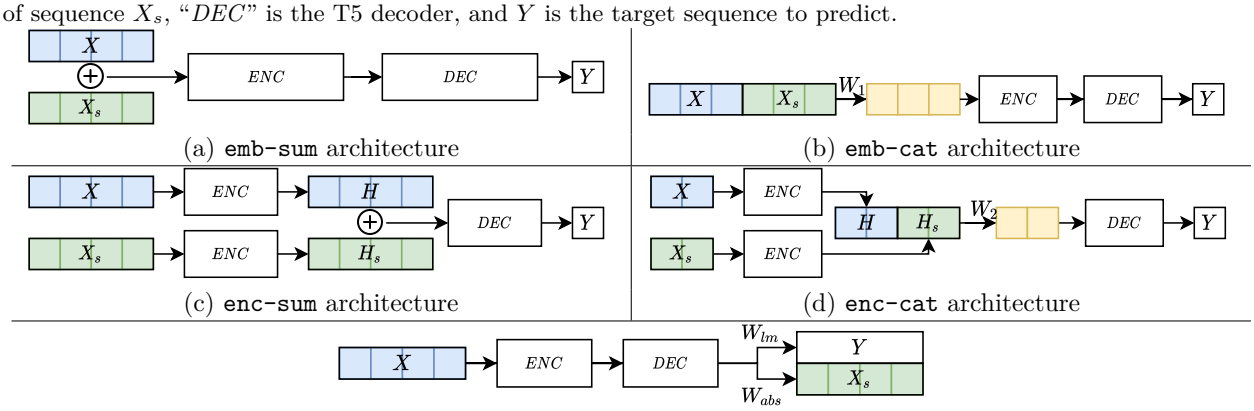

(a) `emb-sum` architecture (b) `emb-cat` architecture (c) `enc-sum` architecture (d) `enc-cat` architecture (e) `dec-loss` architecture

for each dataset depending on the number of unique entities per example. Individual values can be seen in Appendix A. If the same entity appears more than once in a single example, it will get the same tag every time within that example. Since we re-use the same finite set of entity tags across all examples, each entity tag will be used for different entity tokens, thus after seeing many examples, entity tags of the same type will likely have a similar embedding. We discuss some result highlighting this phenomenon in Appendix B.

In order to better understand the influence of having multiple tags for the same entity type, we also ran experiments in which we set $n = 1$, thus forcing all entities of the same type to be mapped to the same embedding. However we noticed both more variance and weaker performance of our models, so the rest of this work will focus on the $n > 1$ setting described above. Results can be seen in Appendix C.

In the following subsections, we describe different strategies to incorporate X_s into an encoder-decoder Transformer model.

3.1 Abstraction as an additional embedding

Our first strategy is to combine X_s with X at the embedding level. To do that, we construct X_s to be of the same length of X. If a `spacy` entity spans over multiple tokens (*e.g.* ["*Alex*", "*andra*", "*Smith*" "*is*", "*the*", "*wife*", "*of*", "*Bob*"]), we copy its entity tag at each sub-token positions (*e.g.* ["*PERSON_3*", "*PERSON_3*", "*PERSON_3*", "*is*", "*the*", "*wife*", "*of*", "*PERSON_11*"]). For each token within both sequences we either sum (`emb-sum` experiments) or concatenate (`emb-cat` experiments) their respective token embeddings.

sum. In `emb-sum` experiments (Figure 1a), if tokens do not have entity tags associated with them, we ignore their embedding to avoid summing the same embedding twice for non-entity tokens. We only sum embeddings of tokens that do have an abstract tag associated with them. This is to ensure that we only modify pre-trained embeddings that correspond to entity tokens. This is done by masking out the tokens in X_s that are the same in X. The input given to the model's encoder is then $emb(X) + mask \times emb(X_s) + positional$ with $emb()$ being the embedding matrix, $mask$ defined as the $X \neq X_s$ binary tensor, and $positional$ being the regular Transformer positional embedding. This resembles the setting used by Rosset et al. (2020), however their knowledge-aware embedding comes from a sequence of entities from a dictionary lookup, rather than a sequence of entity *types* from a pre-trained tagger. The advantage of our method is that it is robust to unseen entities of the same type.

concat. In `emb-cat` experiments (Figure 1b), if tokens do not have an entity tag associated with them, we replace their embedding with a generic (learnable) "*<grounded>*" token embedding. This ensures that all non-entity token embeddings gets modified in the same way compared to entity tokens. We eventually resize the concatenated embeddings with a learnable matrix $W_1 \in R^{2e \times e}$ with e being the model's embedding size. The input given to the model's encoder is then $[emb(X); emb(X_s)] \cdot W_1 + positional$ with $emb()$ being the

embedding matrix, $[;]$ defined as the concatenation operator, and *positional* being the regular Transformer positional embedding. In this setup the model has $2e^2 + e$ more parameters.

3.2 Abstraction as an additional sequence to encode

Our second strategy is to combine X_s with X at the encoding level. To do that, we again construct X_s to be of the same length of X. Similarly as above, if a `spacy` entity spans over multiple tokens, we copy its entity tag at each sub-token positions. We then encode both X and X_s with the same encoder weights to have two contextualized encodings: H and H_s respectively. For each token within both sequences we either sum (`enc-sum` experiments) or concatenate (`enc-cat` experiments) their respective contextualized encodings.

sum. For `enc-sum` experiments (Figure 1c), the input given to the model's decoder becomes $H + H_s$. Unlike in Section 3.1, in these experiments we do not mask any position because the encodings are contextualized over the entire sequence. All token representations were influenced by all other tokens because of the Transformer encoder attention mask. Thus even non-entity token representations were influenced by entity tokens.

concat. For `enc-cat` experiments (Figure 1d), we introduce a learnable matrix $W_2 \in R^{2d \times d}$ with d being the model's encoding size in order to resize the concatenated encodings, similarly to Section 3.1. The input given to the model's decoder is then $[H; H_s] \cdot W_2$ with $[;]$ defined as the concatenation operator. In this setup the model has $2d^2$ more parameters.

3.3 Abstraction as an auxiliary task

Our third strategy is to incorporate X_s into the model with an additional cross entropy loss (`dec-loss` experiments). The model will now be tasked to predict both the target output Y as well as the abstracted input X_s. To do that, we introduce a second language model head $W_{abs} \in R^{d \times vocab}$ (with d being the model's decoder size) on top of the model's decoder, initialized to have the same weights than the original language model head W_{lm}, and fine-tuned during training with a second cross-entropy loss. The final model's loss is then the average between the two cross entropy losses:

$$0.5 * \frac{1}{|X_s|} \sum_{i=0}^{|X_s|} P(X_s)_i * log(\text{softmax}(H^{dec} \cdot W_{abs}))_i$$
$$+0.5 * \frac{1}{|Y|} \sum_{j=0}^{|Y|} P(Y)_j * log(\text{softmax}(H^{dec} \cdot W_{lm}))_j,$$

with H^{dec} being the output tensor of the model's decoder. Note that X_s and Y have different lengths ($|X_s|$ and $|Y|$ respectively), which is why we differentiate indices between the two sums. By sharing the decoder weights (except for the additional language model head), we make sure that most of the network parameters are influenced by the additional cross-entropy loss. This acts as a regularizer and forces the model to "*know*" about entity types within its original parameters. In this setup, the model has $d * vocab$ more parameters. Figure 1e illustrates this strategy. While not in the scope of our initial experiments, we evaluated the performance of this model to predict abstract sequences with its additional language model head. Curious readers can refer to Appendix B for more details.

4 Experiments

In this section we describe the experiments we ran on various datasets. We start with the CLUTRR benchmark (Sinha et al., 2019) in Section 4.1 as controlled experiments in which we know how much compositional generalisation is required. We then test our models on the ProofWriter (Clark et al., 2020; Tafjord et al., 2021) dataset in Section 4.2. This allows to verify if entity type abstraction is beneficial in formally defined logical reasoning environments with simple language. We next report experiments on the multi-hop question answering task HotpotQA (Yang et al., 2018) in Section 4.3. This allows to test if entity type abstraction is beneficial in two-hop question answering settings with more natural language which is by nature more noisy.

Eventually, we also report results on the conversational question answering task CoQA (Reddy et al., 2019) in Section 4.4. This allows to test if entity type abstraction is beneficial in conversational settings in which the entity being discussed may be originally introduced much earlier in the conversation, thus requiring some entity linking before answering.

For all experiments we trained one model for each of the 5 different strategies presented in Section 3, in addition to a baseline model fine-tuned without any abstraction knowledge. We used the `AllenNLP` library (Gardner et al., 2017) with the HuggingFace `transformers` library (Wolf et al., 2019) PyTorch implementation of `T5-small` with 16-bit floating point precision. Each experiment was run on tesla V100 32gb GPUs with early stopping and a patience of 10 epochs on the validation set (defined as a 10% split of the training set). We report all hyper-parameters and library versions in Appendix A for reproducibility purposes.

4.1 Compositional generalization with CLUTRR

Although synthetic, CLUTRR is used because it allows for controlled experiments in which we can clearly measure both interpolation and extrapolation performance of our model. We generated $390,000$ examples that were roughly split 77/23 between training and testing. Each example consists of a unique (non-cyclic) family graph. The goal of this task is to infer the type of edge (family relation) between two nodes (two entities) that are the further apart in the input graph. The bigger the graph, the more hops are required to infer the missing edge. We express each family graph, along with its question and answer in text using a simple "*[e_1] is the [rel] of [e_2]*" template. Some examples of input/output sequence pairs can be seen in Appendix D.

We evaluate the generated answer accuracy. The answer is defined as the first sentence in the generated sequence. Since all answers during training were expressed using a simple template, we inverse this template to extract the $(\hat{e}1, \hat{rel}, \hat{e}2)$ triple from the generated answer. If the extraction fails, we consider the generated answer wrong. We then compare the extracted triple to the ground truth provided by the CLUTRR dataset. If the reference solution is $(e1, rel, e2)$, we accept both $(e1, rel, e2)$ and $(e2, inv_rel, e1)$ as valid solutions, with inv_rel being the inverse relation of rel. For instance, the inverse relation of "*father*" can be "*son*" or "*daughter*", we accept both.

4.1.1 Testing Compositional generalization

We carefully divided train and test sets to force the model to generalize to both unseen graph sizes (*i.e.*: unseen reasoning depth) and unseen $(e1, rel, e2)$ triples. Specifically, the training set is made of graphs with 2, 4 and 6 relations between 3, 5 and 7 entities respectively, while the test set is made of graphs with up to 10 relations between 11 entities. In addition, all possible entities and relations are seen during training but only 9.58% of $(e1, rel, e2)$ triples from the test set are also in the training set. This small overlap makes the test set harder than originally designed and allows to analyse the compositional generalization capacity of our model.

We fine-tuned a `T5-small` model on $300,000$ training examples of levels $2, 4$ and 6 and evaluate the model on 9 test sets of $10,000$ examples each for all levels from 2 to 10. The level is defined as the number of edges (relations) in the graph. The higher the level is, the bigger the graph is, the further apart the two entities to link are, and the greater the number of hops required to answer the query is. Specifically, we test levels $2, 4$ and 6 for compositional generalization, levels 3 and 5 for interpolation, and levels $7, 8, 9$ and 10 for extrapolation.

4.1.2 Results

Table 2 shows answer accuracy on each test set level for models trained with $n = 20$ tokens per entity type. As mentioned in Section 3, this helps keeping track of "who's who" in the abstracted sequence, which is important for solving a task such as CLUTRR. We see that the best model (`enc-sum`) strongly outperforms all other models with an average score of 88.8% compared to 62.9% for the baseline.

Table 2: Prediction accuracy on CLUTRR test set for all difficulty levels. Models have been trained on levels 2, 4, 6 with only 9.58% of all the $(e1, rel, e2)$ triples present in the test set. Per-level performance is colored in shades of green for better visualisation. The red boxed area indicates test problems at depths unseen during training.

CLUTRR	**2**	**3**	**4**	**5**	**6**	**7**	**8**	**9**	**10**	**avg.**
no abstraction	100%	84.4%	64.8%	61.5%	54.2%	56.6%	45.5%	42.6%	56.8%	**62.9%**(±0.18)
emb-sum	100%	85.3%	74.6%	59.3%	64.3%	67.7%	65.1%	58.9%	68.4%	**71.5%**(±0.13)
emb-cat	94.6%	60.0%	35.6%	42.0%	40.2%	74.3%	78.2%	77.9%	80.6	**64.8%**(±0.21)
enc-sum	**100%**	**94.8%**	**86.9%**	**89.9%**	**85.6%**	**87.2%**	**85.1%**	**84.3%**	**85.5%**	**88.8%**(±0.05)
enc-cat	100%	86.1%	72.6%	70.2%	66.7%	69.1%	63.8%	61.9%	74.0%	**73.8%**(±0.12)
dec-loss	100%	74.7%	64.9%	59.3%	56.2%	61.3%	52.8%	47.8%	61.3%	**64.2%**(±0.15)

sum -vs- concatenation. We can see that for both the embedding strategies (`emb-cat` & `emb-sum`) and the encoding strategies (`enc-cat` & `enc-sum`), summing representations together yields better performance than feeding their concatenation through a linear layer. One hypothesis is that in the `emb-cat` model, all pre-trained embeddings are modified by either a entity type token embedding or the "<grounded>" embedding, whereas the `emb-sum` model keeps most of its pre-trained embeddings unchanged. This result also suggests that sometimes, simpler methods are more effective.

embedding -vs- encoding. From Table 2 we also see that, on average, processing the abstract sequence through the encoder yields better performance than only processing it through the token embedder. This is expected as more layers of the Transformer can process the abstracted sequence.

learning the abstraction. In the last line of Table 2 the abstraction is given as output to the model. This experiment tests if learning how to abstract along-side the original task helps the model. We can see that learning to predict the abstract sequence can indeed help generalize as the average score increases from 62.9% for the baseline to 64.2% for the `dec-loss` model. However it is not the most effective method in this case. We believe this is because we test longer reasoning lengths (up to 10 steps), making the input sequence much longer than what is seen during training (up to 6 steps). This is because in CLUTRR, to make long reasoning chains the input family story gets longer. This penalizes the `dec-loss` model since it is designed to generate the abstracted version of the input, regardless of its length.

Overall, we can see that abstraction-aware models can all extrapolate better than the baseline model, suggesting that entity abstraction does help pre-trained Transformers to compositionally generalize. To verify that this is not just a feature of the CLUTRR dataset, we perform the same analysis on another synthetic dataset in the next section.

4.2 Abductive Reasoning with ProofWriter

Similarly to CLUTRR, the ProofWriter dataset (Tafjord et al., 2021) is a collection of synthetic facts and rules with derived conclusions. The goal of this task is to infer the truth value of an unknown statement given a series of known facts and 1-hop inference rules. Each example is made of a different set of facts, rules, and an unknown statement. The model then has to predict if the unknown statement is "*True*", "*False*", or "*Unknown*" according to the input knowledge. Each fact and rule is expressed in simple templated language given by a grammar. Some examples of input/output pairs can be seen in Appendix D.

The dataset also provides the required chain of inference required to arrive at the final answer. The number of such 1-hop inference steps is considered the "depth" of the example. For instance a depth-0 (D0) example simply requires to see if the unknown statement is present in the input list of fact or not; a depth-1 (D1) example requires to apply one inference rule to one fact to arrive at the answer; etc... The dataset contains examples of up to depth-5 (D5) inference chains. We test for compositional generalisation by training on examples of up to depth 2 reasoning chains (D0, D1, D2) and testing on examples for each depth from D0 to D5.

We fine-tuned `T5-small` models on the official training and development set from the depth <= 2 data folder and tested it on the test set from the depth <= 5 data folder; consisting of 70,076 training examples and 20,030 testing examples. We trained one model for each of the 5 different strategies presented in Section 3, in

Table 3: Prediction accuracy on different slices of the ProofWriter D5 test set for all our models and the originally reported numbers by Clark et al. (2020). Models have been trained on depth D0, D1, D2. Models are trained in the "open-world" assumption (OWA), except for the original Clark et al. (2020) model which was trained in the "closed-world" assumption (CWA). Per-depth performance is colored in shades of green for better visualisation. The red boxed area indicates test problems at depths unseen during training.

ProofWriter	**RoBERTa-large** Clark et al. (2020) CWA	**no abstraction** OWA	**emb-sum** OWA	**emb-cat** OWA	**enc-sum** OWA	**enc-cat** OWA	**dec-loss** OWA
Overall	83.9%(±0.29)	89.8%(±0.11)	90.9%(±0.07)	90.9%(±0.09)	88.4%(±0.08)	90.1%(±0.07)	**91.8%**(±0.07)
D0	**100.0%**	99.5%	99.2%	99.5%	98.9%	99.2%	99.4%
D1	**98.8%**	95.6%	93.5%	95.3%	89.5%	91.8%	95.1%
D2	**98.8%**	87.9%	81.0%	87.1%	75.3%	83.5%	86.6%
D3	71.1%	83.7%	84.6%	85.9%	81.7%	85.2%	**87.4%**
D4	43.4%	77.3%	**87.4%**	82.2%	84.7%	84.1%	85.0%
D5	37.2%	70.0%	**85.3%**	74.8%	84.0%	79.6%	80.6%

addition to a baseline model fine-tuned without any abstraction knowledge. Unlike in all other experiments, for ProofWriter examples, we did not use the generic `spacy` named entity tagger because it did not support the entity types covered by ProofWriter examples. Instead, we used the real abstraction labels provided by the grammar files[2], and defined the following abstraction tokens: "*PERSON*", "*ATTRIBUTE*", "*ANIMAL*", "*RELATION*".

Table 3 shows the prediction accuracy on different slices of the D5 test set for all our models. Although trained on an older version of the dataset ("closed-world" assumption - CWA), we also report the original performance by Clark et al. (2020). While not directly comparable because of the different version of the dataset, we can still see that our `T5-small` experiments all extrapolate (D3-D5) better than the original `RoBERTa-large` model despite having less parameters. `RoBERTa-large` performs better at depths seen during training (D0-D2), which may be due to the model size being bigger (hence having greater capacity to model questions of previously seen depths), however, without abstraction, the larger model struggles to generalize to unseen reasoning depths, unlike our models.

Most importantly, if we compare with our "no abstraction" baseline model, Table 3 also shows that our abstraction methods help extrapolate to unseen reasoning depths. While our baseline model performs 83.7%, 77.3%, and 70% on examples from D3, D4, D5 respectively; all other abstraction-aware models extrapolate better, with the best overall model (`dec-loss`) performing 87.4%, 85%, and 80.6% on D3, D4, D5 examples respectively.

We also note that, unlike in CLUTRR, in this dataset the depth of reasoning (D0-D5) is not tied to the input length. In ProofWriter, all examples have a similar average input length, regardless of the depth of reasoning required to predict the answer. Thus the `dec-loss` model is not penalized like it was the case in CLUTRR, which result in it being the best model overall.

Overall, we achieve new state-of-the-art results on the ProofWriter dataset when trained only on examples from D0-D2. This is suggesting that entity abstraction does help pre-trained Transformers to **compositionally generalize to unseen reasoning chains**. One important thing to note however is that both CLUTRR and ProofWriter sentences are relatively simple to abstract: 100% of the entities are correctly abstracted in both datasets. In the next sections we will see if explicit abstraction is still beneficial on more realistic but less formally defined tasks.

4.3 Multi-hop Question Answering with HotpotQA

In this section we report experiments on the multi-hop question answering (HotpotQA) dataset (Yang et al., 2018). HotpotQA contains natural language, making it more diverse and harder to get abstraction labels than CLUTRR. In addition, HotpotQA has 2-hop inference chains both in its training and testing data splits, thus we are not able to test generalisation to longer reasoning chains. Nevertheless, we believe it is a good compromise between natural language and multi-hop reasoning.

[2]https://tinyurl.com/proofwritergrammars

Table 4: Average test performance for all models on HotpotQA. Average and standard deviation computed with 3 random seeds.

HOTPOTQA	ExactMatch	F1	Precision	Recall
no abstraction	54.7%(±0.01)	68.9%(±0.01)	72.4%(±0.01)	69.1%(±0.01)
emb-sum	54.3%(±0.01)	68.4%(±0.01)	72.0%(±0.01)	68.6%(±0.01)
emb-cat	52.6%(±0.01)	66.5%(±0.01)	69.7%(±0.01)	67.0%(±0.01)
enc-sum	54.2%(±0.01)	68.5%(±0.01)	72.0%(±0.01)	68.7%(±0.01)
enc-cat	52.9%(±0.01)	67.2%(±0.01)	71.0%(±0.01)	67.3%(±0.01)
dec-loss	**55.7%**(±0.02)	**69.8%**(±0.01)	**73.3%**(±0.01)	**69.9%**(±0.01)

Table 5: Average test performance for all models on CoQA. Average and standard deviation computed with 3 random seeds.

CoQA	ExactMatch	F1
no abstraction	66.0%(±0.001)	74.4%(±0.000)
emb-sum	65.7%(±0.002)	74.2%(±0.002)
emb-cat	63.8%(±0.001)	72.3%(±0.001)
enc-sum	65.8%(±0.001)	74.1%(±0.002)
enc-cat	65.2%(±0.002)	73.8%(±0.002)
dec-loss	**66.4%**(±0.001)	**74.9%**(±0.001)

Used in the distractor setting, each example consists of a list of 10 Wikipedia paragraphs, a question that requires the model to combine information from two paragraphs, and the answer. Since concatenating all of the 10 paragraphs would result in a context size much larger than what regular Transformer models allowed (512 or 1024 tokens), we instead only took the two golden paragraphs as context, plus the question. While this beats the original purpose of retrieving the useful paragraphs, we are not interested in achieving state-of-the art on this benchmark. We are rather interested in using it to compare the usefulness of our approach on a more natural multi-hop question-answering setup. An example of input/output sequence pair can be seen in Appendix D.

Because the official test set is not public, we used the official validation set as our test set to compare our models and fine-tuned a `T5-small` model on 90% of the training set while keeping the remaining 10% as our custom validation set for early stopping. We trained one model for each of the 5 different strategies presented in Section 3, in addition to a baseline model fine-tuned without any abstraction knowledge.

Table 4 shows exact match, F1 scores, Precision and Recall on our test set. We can see from these results that the best model is the abstraction-aware `dec-loss` model (trained to predict both the answer and the input in its abstract form) with an F1 score of 69.8% against 68.9% for the baseline model. However, the baseline model is a strong candidate and the abstraction does not always benefit the model depending on how it is incorporated. This may be due to the fact that entity abstraction labels are harder to predict on natural language, and that entity type abstraction may not be required in problems with little to no formal logical structure. We further discuss this in Section 6.

4.4 Conversational Question Answering with CoQA

Eventually, motivated by the use of a generative model, we test the same abstraction strategy in a conversational setting. For that, we leveraged the conversational question answering dataset CoQA (Reddy et al., 2019). The task presented by this dataset is to understand a text passage and answer a series of inter-connected questions in a conversation. The conversation aspect introduces follow-up questions that forces the model to keep track of what entity is currently being referred to and to look back at previous interactions. Examples of input/output sequence pairs can be found in Appendix D. The dataset does not always explicitly forces multi-hop reasoning steps, but it could still happen (*i.e.* see the last CoQA example of Appendix D in which the model must perform a substraction between all subjects and the ones already mentioned). In addition, the conversational nature of this dataset often introduces a co-reference step to

be made before fetching the information from the paragraph in context. In this setting we will thus test if abstraction can help in this multi-step information retrieval procedure.

Similarly to HotpotQA, because the official test set is not public, we used the official validation set as our test set to compare our models and fine-tuned a `T5-small` model on 90% of the training set while keeping the remaining 10% as our custom validation set for early stopping. We trained one model for each of the 5 different strategies presented in Section 3, in addition to a baseline model fine-tuned without any abstraction knowledge.

Table 5 shows the exact match and F1 score on our test set. Although by a small margin, we can see that the best model is again the abstraction aware `dec-loss` model (trained to predict both the answer and the input in its abstract form) with an F1 score of 74.9% against 74.4% for the baseline. The baseline model is quite strong already and the benefit of abstraction is questionable in this case. We further discuss this result in the following section. As in previous experiments, the worst performing model is `emb-cat` and one of the best is the `enc-sum` model (after `dec-loss` in this case).

5 Discussion

In this section we aim to analyse further the results presented above by comparing them and measuring some key characteristic about each datasets.

Let's first summarize the results from all experiments. Overall, in all datasets (except for CLUTRR) the best model on average was the `dec-loss` model, which is trained to predict both the target output sequence and the input sequence in its abstracted form. As discussed previously, we believe that the reason why the `dec-loss` model did not perform as good as the other models in CLUTRR is because input sequence length is tied to the reasoning depth required to answer the question. Indeed, a question of level n ($2 \leq n \leq 10$) will have exactly n sentences in its input. Thus, during testing, the model must generate sequences of unseen lengths. Previous work showed that length generalization is a common weakness of classical language models (Murray & Chiang, 2018; Clark et al., 2020; Gontier et al., 2020; Anil et al., 2022; Press et al., 2022). Overall, our results suggest that **when input sequence length is relatively stable across all examples, the `dec-loss` abstraction strategy is beneficial to multi-step reasoning tasks**.

We then investigate why results on the two "natural", less procedural tasks (HotpotQA & CoQA) do not yield strong conclusions like in the synthetic cases of CLUTRR & ProofWriter. The first major difference between these datasets is that CLUTRR and ProofWriter are designed explicitly to test for compositional generalisation and reasoning extrapolation. In both datasets, the model is tested on examples of longer reasoning chains than what is observed during training. The language vocabulary is limited and the required reasoning depth is controlled. This is possible when working with tasks that are formally defined in a logical reasoning setting. On the other hand, HotpotQA and CoQA are designed from human written text (Wikipedia for Hotpot, human conversations for CoQA). This natural setting implies two things. (1) It is harder to control the reasoning depth required: all HotpotQA examples require to combine two pieces of information in order to answer the question. CoQA examples require to solve long co-reference resolution chains, however the test set does not contain longer chains of reasoning. (2) The language vocabulary is more noisy, making it harder to extract the useful information from a piece of text. These distinctions suggest that **entity type abstraction is mostly beneficial for formally defined logical tasks in which the model must reason at unseen depths during inference time**.

A second differentiating factor between these datasets is the quantity and quality of entity tags provided to the model. In an effort to estimate the influence of the tagger accuracy on our results, we compare each dataset in terms of the amount of entity tags they contain, as well as the accuracy of these tags. The reported performance of the entity tagger we used is 0.85 F1[3]. To further validate this metric, for each dataset, we estimate (i) the percentage of tokens tagged as entities, (ii) the correctness of the tagged entities (precision), and (iii) the amount of correctly tagged entities out of all the entities that should have been tagged (recall). We estimate these metrics by manual inspection of a random set of examples for each dataset and report the F1 metric in Table 6. We can see that the percentage of tokens tagged as entities is roughly the same

[3] https://tinyurl.com/encoreweblg

Table 6: Percentage of tokens being tagged as entities and estimated F1 score of the tagger on each dataset.

Dataset	Entity Tokens	F1
CLUTRR	22.2% (±0.019)	100% (±0)
ProofWriter	36.0% (±0.036)	100% (±0)
HotpotQA	37.0% (±0.085)	88.5% (±0.092)
CoQA	17.7% (±0.095)	88.4% (±0.085)

Table 7: Average CLUTRR answer accuracy for models trained with 0% noise and 10% noise.

	0% noise	**10% noise**
no abstraction	62.9%	
emb-sum	71.5%	78.3%
emb-cat	64.8%	26.2%
enc-sum	**88.8%**	**87.8%**
enc-cat	73.8%	55.7%
dec-loss	64.2%	68.7%

across datasets. In addition, the average quality of entity tags for HotpotQA and CoQA is in line with the reported 85% F1 performance of the tagger. However, we note that all entities in CLUTRR and ProofWriter are correctly labeled. This suggests that **the quality of the entity tagger can influence the benefits of performing entity type abstraction**.

To further estimate this influence, we ran experiments on the CLUTRR benchmark in which we added noise to the abstract labels, thus artificially simulating a weaker tagger. In particular, we modified 10% of the entities by either replacing their entity type or by deleting the tag altogether. We report in Table 7 the average answer accuracy of our models on the CLUTRR benchmark. The average is taken across all test levels from 2 to 10. Results show greater variance among the models we use. The stronger model without noise (`enc-sum`) is still the best model with noise. It is interesting to see that three models (`emb-sum`, `enc-sum`, `dec-loss`) still beat the baseline and do not lose much performance with noise. On the other hand, models like `emb-cat` or `dec-cat` see their performance greatly reduced and are under-performing the baseline. This confirms that **the tagger accuracy plays a role in the overall performance**, but also shows that **some methods are more robust against weaker tagging accuracy**.

Overall, the noisy entity tags represent only a part of the reason why explicit abstraction doesn't work as well for HotpotQA and CoQA as for CLUTRR and ProofWriter. As mentioned above, another reason why abstraction doesn't work on "realistic" datasets comes from the fact that "real-world" problems do not have strong enough logical structure which can benefit from the abstraction technique. It is only when tasked on more logical problems explicitly requiring reasoning depths unseen during training that abstraction becomes significantly beneficial.

6 Conclusion

Conclusion. We presented various ways to incorporate abstract knowledge into Transformer Language Models. Focusing on entity types, this work evaluated model performance on reasoning tasks requiring compositional generalization and multi-hop reasoning. Overall our results demonstrate three things: (i) incorporating abstract knowledge significantly improves reasoning and compositional generalization in both interpolation and extrapolation when the environment is formally defined in a logical reasoning setting; (ii) different ways to incorporate abstraction yields different performance boosts: `enc-sum` and `dec-loss` are generally performing better than others; (iii) abstraction is not beneficial when the task at hand is more natural, less procedural, and not requiring long reasoning chains. This last result is due to the noisy entity tagging from "off-the-shelf" taggers, and due to the nature of the task at hand.

Limitations. One limitation of our work is that the method we present requires annotated data which is not always available. Furthermore, this additional data processing can take time and may not scale well to larger datasets if implemented naively. Overall, we did not find significantly longer training time for all approaches except for the `dec-loss` model that was training on average 2 times longer than the other methods. The most important factor in training time was the dataset used rather than the method used. Models trained on natural language datasets CoQA and HotpotQA took days to train while models trained on CLUTRR and ProofWriter took a few hours.

Future Explorations. One hypothesis that results from our work is the following question: could *pre-training* Transformer models with additional abstraction data result in stronger performance when fine-tuned

with abstraction data like we do in this work? Although we could not train *from-scratch* a T5 model on its original C4 dataset (Raffel et al., 2020), we believe that augmenting C4 with abstract annotations like we do on a smaller scale and training T5 from scratch on this augmented dataset could potentially yield a stronger language model.

Another interesting future direction worth exploring would be the ethical benefit of incorporating explicit abstraction into large language models. Previous work showed that pre-trained language models can have some undesired societal biases (Henderson et al., 2018; Shwartz et al., 2020; Bender et al., 2021). Although not explored in this work, we believe that giving abstract entity types like we do in this work could have a positive societal impact on language models, potentially alleviating some of these biases. For instance, through abstraction, a model can be exposed to female and male names both being "*PERSON*"s and that a "*PERSON*" can equally be a "*manager*" or an "*assistant*" regardless of its gender. Similar exposure could be achieved with other abstraction types such as "*RELIGION*", "*JOB*", "*COUNTRY*", "*NATIONALITY*", etc... Benchmarks such as StereoSet (Nadeem et al., 2021) could be used to measure the beneficial impact that explicit abstraction can have.

References

Cem Anil, Yuhuai Wu, Anders Andreassen, Aitor Lewkowycz, Vedant Misra, Vinay Ramasesh, Ambrose Slone, Guy Gur-Ari, Ethan Dyer, and Behnam Neyshabur. Exploring length generalization in large language models. *arXiv preprint arXiv:2207.04901*, 2022.

Emily M Bender, Timnit Gebru, Angelina McMillan-Major, and Shmargaret Shmitchell. On the dangers of stochastic parrots: Can language models be too big? In *Proceedings of the 2021 ACM Conference on Fairness, Accountability, and Transparency*, pp. 610–623, 2021.

Tom B Brown, Benjamin Mann, Nick Ryder, Melanie Subbiah, Jared Kaplan, Prafulla Dhariwal, Arvind Neelakantan, Pranav Shyam, Girish Sastry, Amanda Askell, et al. Language models are few-shot learners. *arXiv preprint arXiv:2005.14165*, 2020.

Kevin Clark, Urvashi Khandelwal, Omer Levy, and Christopher D. Manning. What does BERT look at? an analysis of BERT's attention. In *Proceedings of the 2019 ACL Workshop BlackboxNLP: Analyzing and Interpreting Neural Networks for NLP*, pp. 276–286, Florence, Italy, August 2019. Association for Computational Linguistics. doi: 10.18653/v1/W19-4828. URL `https://aclanthology.org/W19-4828`.

Peter Clark, Oyvind Tafjord, and Kyle Richardson. Transformers as soft reasoners over language. In Christian Bessiere (ed.), *Proceedings of the Twenty-Ninth International Joint Conference on Artificial Intelligence, IJCAI-20*, pp. 3882–3890. International Joint Conferences on Artificial Intelligence Organization, 7 2020. doi: 10.24963/ijcai.2020/537. URL `https://doi.org/10.24963/ijcai.2020/537`. Main track.

Luc De Raedt, Angelika Kimmig, and Hannu Toivonen. Problog: A probabilistic prolog and its application in link discovery. In *Proceedings of the Twentieth International Joint Conference on Artificial Intelligence, IJCAI-07*, pp. 2462–2467. International Joint Conferences on Artificial Intelligence Organization, 2007.

Jacob Devlin, Ming-Wei Chang, Kenton Lee, and Kristina Toutanova. BERT: Pre-training of deep bidirectional transformers for language understanding. In *Proceedings of the 2019 Conference of the North American Chapter of the Association for Computational Linguistics*, pp. 4171–4186, Minneapolis, Minnesota, June 2019. Association for Computational Linguistics. doi: 10.18653/v1/N19-1423. URL `https://www.aclweb.org/anthology/N19-1423`.

Akiko Eriguchi, Yoshimasa Tsuruoka, and Kyunghyun Cho. Learning to parse and translate improves neural machine translation. In *Proceedings of the 55th Annual Meeting of the Association for Computational Linguistics (Volume 2: Short Papers)*, pp. 72–78, Vancouver, Canada, July 2017. Association for Computational Linguistics. doi: 10.18653/v1/P17-2012. URL `https://aclanthology.org/P17-2012`.

Thibault Févry, Livio Baldini Soares, Nicholas FitzGerald, Eunsol Choi, and Tom Kwiatkowski. Entities as experts: Sparse memory access with entity supervision. In *Proceedings of the 2020 Conference on Empirical*

Methods in Natural Language Processing (EMNLP), pp. 4937–4951, Online, November 2020. Association for Computational Linguistics. doi: 10.18653/v1/2020.emnlp-main.400. URL https://aclanthology.org/2020.emnlp-main.400.

Daan Fierens, Guy Van den Broeck, Joris Renkens, Dimitar Shterionov, Bernd Gutmann, Ingo Thon, Gerda Janssens, and Luc De Raedt. Inference and learning in probabilistic logic programs using weighted boolean formulas. *Theory and Practice of Logic Programming*, 15(3):358–401, 2015.

Matt Gardner, Joel Grus, Mark Neumann, Oyvind Tafjord, Pradeep Dasigi, Nelson F. Liu, Matthew Peters, Michael Schmitz, and Luke S. Zettlemoyer. Allennlp: A deep semantic natural language processing platform. 2017.

Yoav Goldberg. Assessing bert's syntactic abilities. *arXiv preprint arXiv:1901.05287*, 2019.

Nicolas Gontier, Koustuv Sinha, Siva Reddy, and Christopher Pal. Measuring systematic generalization in neural proof generation with transformers. In *Advances in Neural Information Processing Systems 33*. Curran Associates, Inc., 2020. URL https://arxiv.org/pdf/2009.14786.pdf.

Peter Henderson, Koustuv Sinha, Nicolas Angelard-Gontier, Nan Rosemary Ke, Genevieve Fried, Ryan Lowe, and Joelle Pineau. Ethical challenges in data-driven dialogue systems. In *Proceedings of the 2018 AAAI/ACM Conference on AI, Ethics, and Society*, pp. 123–129, 2018.

John Hewitt and Christopher D. Manning. A structural probe for finding syntax in word representations. In *Proceedings of the 2019 Conference of the North American Chapter of the Association for Computational Linguistics: Human Language Technologies, Volume 1 (Long and Short Papers)*, pp. 4129–4138, Minneapolis, Minnesota, June 2019. Association for Computational Linguistics. doi: 10.18653/v1/N19-1419. URL https://aclanthology.org/N19-1419.

Sepp Hochreiter and Jürgen Schmidhuber. Long short-term memory. *Neural computation*, 9(8):1735–1780, 1997.

Yangfeng Ji, Chenhao Tan, Sebastian Martschat, Yejin Choi, and Noah A. Smith. Dynamic entity representations in neural language models. In *Proceedings of the 2017 Conference on Empirical Methods in Natural Language Processing*, pp. 1830–1839, Copenhagen, Denmark, September 2017. Association for Computational Linguistics. doi: 10.18653/v1/D17-1195. URL https://aclanthology.org/D17-1195.

Brenden M. Lake and Marco Baroni. Generalization without systematicity: On the compositional skills of sequence-to-sequence recurrent networks. In *ICML*, pp. 2879–2888, 2018. URL http://proceedings.mlr.press/v80/lake18a.html.

Yoav Levine, Barak Lenz, Or Dagan, Ori Ram, Dan Padnos, Or Sharir, Shai Shalev-Shwartz, Amnon Shashua, and Yoav Shoham. SenseBERT: Driving some sense into BERT. In *Proceedings of the 58th Annual Meeting of the Association for Computational Linguistics*, pp. 4656–4667, Online, July 2020. Association for Computational Linguistics. doi: 10.18653/v1/2020.acl-main.423. URL https://aclanthology.org/2020.acl-main.423.

Adam Liška, Germán Kruszewski, and Marco Baroni. Memorize or generalize? searching for a compositional rnn in a haystack. *arXiv preprint arXiv:1802.06467*, 2018.

Nelson F. Liu, Matt Gardner, Yonatan Belinkov, Matthew E. Peters, and Noah A. Smith. Linguistic knowledge and transferability of contextual representations. In *Proceedings of the 2019 Conference of the North American Chapter of the Association for Computational Linguistics: Human Language Technologies, Volume 1 (Long and Short Papers)*, pp. 1073–1094, Minneapolis, Minnesota, June 2019a. Association for Computational Linguistics. doi: 10.18653/v1/N19-1112. URL https://aclanthology.org/N19-1112.

Yinhan Liu, Myle Ott, Naman Goyal, Jingfei Du, Mandar Joshi, Danqi Chen, Omer Levy, Mike Lewis, Luke Zettlemoyer, and Veselin Stoyanov. Roberta: A robustly optimized bert pretraining approach. *arXiv preprint arXiv:1907.11692*, 2019b.

Nafise Sadat Moosavi, Marcel de Boer, Prasetya Ajie Utama, and Iryna Gurevych. Improving robustness by augmenting training sentences with predicate-argument structures. *arXiv preprint arXiv:2010.12510*, 2020.

Kenton Murray and David Chiang. Correcting length bias in neural machine translation. In *Proceedings of the Third Conference on Machine Translation: Research Papers*, pp. 212–223, Brussels, Belgium, October 2018. Association for Computational Linguistics. doi: 10.18653/v1/W18-6322. URL `https://aclanthology.org/W18-6322`.

Moin Nadeem, Anna Bethke, and Siva Reddy. StereoSet: Measuring stereotypical bias in pretrained language models. In *Proceedings of the 59th Annual Meeting of the Association for Computational Linguistics and the 11th International Joint Conference on Natural Language Processing (Volume 1: Long Papers)*, pp. 5356–5371, Online, August 2021. Association for Computational Linguistics. doi: 10.18653/v1/2021.acl-long.416. URL `https://aclanthology.org/2021.acl-long.416`.

Maria Nădejde, Siva Reddy, Rico Sennrich, Tomasz Dwojak, Marcin Junczys-Dowmunt, Philipp Koehn, and Alexandra Birch. Predicting target language CCG supertags improves neural machine translation. In *Proceedings of the Second Conference on Machine Translation*, pp. 68–79, Copenhagen, Denmark, September 2017. Association for Computational Linguistics. doi: 10.18653/v1/W17-4707. URL `https://aclanthology.org/W17-4707`.

Matthew Peters, Mark Neumann, Luke Zettlemoyer, and Wen-tau Yih. Dissecting contextual word embeddings: Architecture and representation. In *Proceedings of the 2018 Conference on Empirical Methods in Natural Language Processing*, pp. 1499–1509, Brussels, Belgium, October-November 2018. Association for Computational Linguistics. doi: 10.18653/v1/D18-1179. URL `https://www.aclweb.org/anthology/D18-1179`.

Matthew E. Peters, Mark Neumann, Robert Logan, Roy Schwartz, Vidur Joshi, Sameer Singh, and Noah A. Smith. Knowledge enhanced contextual word representations. In *Proceedings of the 2019 Conference on Empirical Methods in Natural Language Processing and the 9th International Joint Conference on Natural Language Processing (EMNLP-IJCNLP)*, pp. 43–54, Hong Kong, China, November 2019. Association for Computational Linguistics. doi: 10.18653/v1/D19-1005. URL `https://aclanthology.org/D19-1005`.

Fabio Petroni, Tim Rocktäschel, Sebastian Riedel, Patrick Lewis, Anton Bakhtin, Yuxiang Wu, and Alexander Miller. Language models as knowledge bases? In *Proceedings of the 2019 Conference on Empirical Methods in Natural Language Processing and the 9th International Joint Conference on Natural Language Processing (EMNLP-IJCNLP)*, pp. 2463–2473, Hong Kong, China, November 2019. Association for Computational Linguistics. doi: 10.18653/v1/D19-1250. URL `https://www.aclweb.org/anthology/D19-1250`.

Ian Porada, Kaheer Suleman, Adam Trischler, and Jackie Chi Kit Cheung. Modeling event plausibility with consistent conceptual abstraction. In *Proceedings of the 2021 Conference of the North American Chapter of the Association for Computational Linguistics: Human Language Technologies*, pp. 1732–1743, Online, June 2021. Association for Computational Linguistics. doi: 10.18653/v1/2021.naacl-main.138. URL `https://aclanthology.org/2021.naacl-main.138`.

Ofir Press, Noah Smith, and Mike Lewis. Train short, test long: Attention with linear biases enables input length extrapolation. In *International Conference on Learning Representations*, 2022. URL `https://openreview.net/forum?id=R8sQPpGCv0`.

Alec Radford, Karthik Narasimhan, Tim Salimans, and Ilya Sutskever. Improving language understanding by generative pre-training. *URL https://s3-us-west-2. amazonaws. com/openai-assets/researchcovers/languageunsupervised/language understanding paper. pdf*, 2018.

Alec Radford, Jeffrey Wu, Rewon Child, David Luan, Dario Amodei, and Ilya Sutskever. Language models are unsupervised multitask learners. *OpenAI Blog*, 1(8), 2019.

Colin Raffel, Noam Shazeer, Adam Roberts, Katherine Lee, Sharan Narang, Michael Matena, Yanqi Zhou, Wei Li, and Peter J Liu. Exploring the limits of transfer learning with a unified text-to-text transformer. *Journal of Machine Learning Research*, 21(1), 2020.

Alessandro Raganato, Jose Camacho-Collados, and Roberto Navigli. Word sense disambiguation: A unified evaluation framework and empirical comparison. In *Proceedings of the 15th Conference of the European Chapter of the Association for Computational Linguistics: Volume 1, Long Papers*, pp. 99–110, 2017.

Siva Reddy, Danqi Chen, and Christopher D Manning. Coqa: A conversational question answering challenge. *Transactions of the Association for Computational Linguistics*, 7:249–266, 2019.

Corby Rosset, Chenyan Xiong, Minh Phan, Xia Song, Paul Bennett, and Saurabh Tiwary. Knowledge-aware language model pretraining. *arXiv preprint arXiv:2007.00655*, 2020.

Devendra Sachan, Yuhao Zhang, Peng Qi, and William L. Hamilton. Do syntax trees help pre-trained transformers extract information? In *Proceedings of the 16th Conference of the European Chapter of the Association for Computational Linguistics: Main Volume*, pp. 2647–2661, Online, April 2021. Association for Computational Linguistics. doi: 10.18653/v1/2021.eacl-main.228. URL `https://aclanthology.org/2021.eacl-main.228`.

Peter Shaw, Ming-Wei Chang, Panupong Pasupat, and Kristina Toutanova. Compositional generalization and natural language variation: Can a semantic parsing approach handle both? In *Proceedings of the 59th Annual Meeting of the Association for Computational Linguistics and the 11th International Joint Conference on Natural Language Processing (Volume 1: Long Papers)*, pp. 922–938, Online, August 2021. Association for Computational Linguistics. doi: 10.18653/v1/2021.acl-long.75. URL `https://aclanthology.org/2021.acl-long.75`.

Peng Shi and Jimmy Lin. Simple bert models for relation extraction and semantic role labeling. *arXiv preprint arXiv:1904.05255*, 2019.

Vered Shwartz, Rachel Rudinger, and Oyvind Tafjord. "you are grounded!": Latent name artifacts in pre-trained language models. In *Proceedings of the 2020 Conference on Empirical Methods in Natural Language Processing (EMNLP)*, pp. 6850–6861, Online, November 2020. Association for Computational Linguistics. doi: 10.18653/v1/2020.emnlp-main.556. URL `https://aclanthology.org/2020.emnlp-main.556`.

Koustuv Sinha, Shagun Sodhani, Jin Dong, Joelle Pineau, and William L. Hamilton. CLUTRR: A diagnostic benchmark for inductive reasoning from text. In *Proceedings of the 2019 Conference on Empirical Methods in Natural Language Processing and the 9th International Joint Conference on Natural Language Processing (EMNLP-IJCNLP)*, pp. 4506–4515, Hong Kong, China, November 2019. Association for Computational Linguistics. doi: 10.18653/v1/D19-1458. URL `https://www.aclweb.org/anthology/D19-1458`.

Dhanasekar Sundararaman, Vivek Subramanian, Guoyin Wang, Shijing Si, Dinghan Shen, Dong Wang, and Lawrence Carin. Syntax-infused transformer and bert models for machine translation and natural language understanding. *arXiv preprint arXiv:1911.06156*, 2019.

Swabha Swayamdipta, Sam Thomson, Kenton Lee, Luke Zettlemoyer, Chris Dyer, and Noah A. Smith. Syntactic scaffolds for semantic structures. In *Proceedings of the 2018 Conference on Empirical Methods in Natural Language Processing*, pp. 3772–3782, Brussels, Belgium, October-November 2018. Association for Computational Linguistics. doi: 10.18653/v1/D18-1412. URL `https://aclanthology.org/D18-1412`.

Oyvind Tafjord, Bhavana Dalvi, and Peter Clark. ProofWriter: Generating implications, proofs, and abductive statements over natural language. In *Findings of the Association for Computational Linguistics: ACL-IJCNLP 2021*, pp. 3621–3634, Online, August 2021. Association for Computational Linguistics. doi: 10.18653/v1/2021.findings-acl.317. URL `https://aclanthology.org/2021.findings-acl.317`.

Ian Tenney, Dipanjan Das, and Ellie Pavlick. BERT rediscovers the classical NLP pipeline. In *Proceedings of the 57th Annual Meeting of the Association for Computational Linguistics*, pp. 4593–4601, Florence, Italy, July 2019a. Association for Computational Linguistics. doi: 10.18653/v1/P19-1452. URL `https://aclanthology.org/P19-1452`.

Ian Tenney, Patrick Xia, Berlin Chen, Alex Wang, Adam Poliak, R Thomas McCoy, Najoung Kim, Benjamin Van Durme, Sam Bowman, Dipanjan Das, and Ellie Pavlick. What do you learn from context? probing for sentence structure in contextualized word representations. In *Proceedings of the 2019 International Conference on Learning Representations*, 2019b. URL https://openreview.net/forum?id=SJzSgnRcKX.

Ashish Vaswani, Noam Shazeer, Niki Parmar, Jakob Uszkoreit, Llion Jones, Aidan N Gomez, Ł ukasz Kaiser, and Illia Polosukhin. Attention is all you need. In *Advances in Neural Information Processing Systems 30*, pp. 5998–6008. Curran Associates, Inc., 2017. URL http://papers.nips.cc/paper/7181-attention-is-all-you-need.pdf.

Pat Verga, Haitian Sun, Livio Baldini Soares, and William W Cohen. Facts as experts: Adaptable and interpretable neural memory over symbolic knowledge. *arXiv preprint arXiv:2007.00849*, 2020.

Alex Wang, Amanpreet Singh, Julian Michael, Felix Hill, Omer Levy, and Samuel R Bowman. Glue: A multi-task benchmark and analysis platform for natural language understanding. *arXiv preprint arXiv:1804.07461*, 2018.

Adina Williams, Nikita Nangia, and Samuel Bowman. A broad-coverage challenge corpus for sentence understanding through inference. In *Proceedings of the 2018 Conference of the North American Chapter of the Association for Computational Linguistics: Human Language Technologies, Volume 1 (Long Papers)*, pp. 1112–1122, New Orleans, Louisiana, June 2018. Association for Computational Linguistics. doi: 10.18653/v1/N18-1101. URL https://aclanthology.org/N18-1101.

Thomas Wolf, Lysandre Debut, Victor Sanh, Julien Chaumond, Clement Delangue, Anthony Moi, Pierric Cistac, Tim Rault, Rémi Louf, Morgan Funtowicz, Joe Davison, Sam Shleifer, Patrick von Platen, Clara Ma, Yacine Jernite, Julien Plu, Canwen Xu, Teven Le Scao, Sylvain Gugger, Mariama Drame, Quentin Lhoest, and Alexander M. Rush. Huggingface's transformers: State-of-the-art natural language processing. *ArXiv*, abs/1910.03771, 2019.

Zhilin Yang, Peng Qi, Saizheng Zhang, Yoshua Bengio, William Cohen, Ruslan Salakhutdinov, and Christopher D. Manning. HotpotQA: A dataset for diverse, explainable multi-hop question answering. In *Proceedings of the 2018 Conference on Empirical Methods in Natural Language Processing*, pp. 2369–2380, Brussels, Belgium, October-November 2018. Association for Computational Linguistics. doi: 10.18653/v1/D18-1259. URL https://aclanthology.org/D18-1259.

John M Zelle and Raymond J Mooney. Learning to parse database queries using inductive logic programming. In *Proceedings of the thirteenth national conference on artificial intelligence*, volume 2, pp. 1050–1055, 1996.

Rowan Zellers, Yonatan Bisk, Roy Schwartz, and Yejin Choi. SWAG: A large-scale adversarial dataset for grounded commonsense inference. In *Proceedings of the 2018 Conference on Empirical Methods in Natural Language Processing*, pp. 93–104, Brussels, Belgium, October-November 2018. Association for Computational Linguistics. doi: 10.18653/v1/D18-1009. URL https://aclanthology.org/D18-1009.

Zhengyan Zhang, Xu Han, Zhiyuan Liu, Xin Jiang, Maosong Sun, and Qun Liu. ERNIE: Enhanced language representation with informative entities. In *Proceedings of the 57th Annual Meeting of the Association for Computational Linguistics*, pp. 1441–1451, Florence, Italy, July 2019. Association for Computational Linguistics. doi: 10.18653/v1/P19-1139. URL https://aclanthology.org/P19-1139.

A Hyperparameters

We used the default `T5-small` hyperparameters from the `HuggingFace` library (Wolf et al., 2019). We present in Table 8 below the library version we used and the model hyperparameters used for all experiments.

The only difference between each dataset is the number of same-type entity tags allowed in each input sequence n. These values were chosen to be the smallest possible number while still being able to identify all the different entities in one sequence. For CLUTRR the maximum number of same-type entities was 20, for ProofWriter it was 10, and for HotpotQA and CoQA it was 100. This is due to the larger context size and the diversity of natural language texts. Results on CLUTRR when $n = 1$ can be found below in Appendix C.

n for CLUTRR	20
n for ProofWriter	10
n for HotpotQA	100
n for CoQA	100
AllenNLP	version 2.2.0
Transformers	version 4.4.2
Spacy	version 2.3.5
batch size	256
16-bit floating point	True
dim embedding	512
dim feedforward	2048
dim key-value	64
dropout	0.1
max length	512
#of heads	8
#of layers	6
optimizer	AdamW
learning rate	1.00E-05
betas	[0.9, 0.999]
epsilon	1.00E-08
gradient norm	1.0
sampler	top-p
p	0.9
temperature	1.0

Table 8: Library version and model hyper-parameters.

B On the abstraction accuracy of the `dec-loss` model

After training the `dec-loss` models for each task, one question we might ask is whether the model is able to correctly predict abstract tokens with its dedicated language model head.

After generating abstract sequences for all test sets, we measured that the model is correctly predicting entity *types* 100% of the time for CLUTRR and ProofWriter, and around 70% of the time for HotpotQA and CoQA compared to the types predicted by our "off-the-shelve" tagger.

One interesting finding though, is that the model is not consistent with entity numbers across the same example. While it can correctly predict the *type* of an entity ("PERSON" vs "LOCATION"), it is almost impossible to stay consistent with entity IDs of that type ("PERSON_11" vs "PERSON_23"). This suggests that at inference time, the distribution of abstract tokens belonging to the same entity type is very close to uniform, which also suggests that all these token embeddings are close to each other.

C CLUTRR results when $n = 1$

To better understand the effect of the hyper-parameter n in our models, we ran additional experiments on the CLUTRR benchmark for different values of n. When $n = 20$ all entities in each example gets a unique abstract token ID. When $n = 1$, all entities of the same type are mapped to the same abstract token. In order to keep track of which entity is related to which, token identity must be preserved. When $n = 1$, the only way to preserve token identity is for the model to use the original (non abstracted) sequence. We report below the average answer accuracy of our models on CLUTRR for different values of n. The average is taken across all test levels from 2 to 10.

	n = 20	**n = 1**
no abstraction	62.9%	
emb-sum	71.5%	**75.0%**
emb-cat	**64.8%**	30.4%
enc-sum	**88.8%**	85.3%
enc-cat	**73.8%**	36.1%
dec-loss	64.2%	**75.7%**

Table 9: Average CLUTRR answer accuracy for models trained with $n = 20$ and $n = 1$ token per entity tag.

We can see that the `emb-cat` and `enc-cat` models perform much worse in the $n = 1$ setting, while the other models are relatively similar in both settings. This suggests that concatenating representations together and then performing a matrix multiplication to resize the representation does not keep entity identity as well as the other methods.

D Input - Output examples

CLUTRR.

lvl.2 input:	"question : How is Anne related to Gary ? context : Brett is Anne 's father . Gary is a son to Brett ."
output:	"answer : Anne has a brother named Gary ."
lvl.4 input:	"question: What is the family connection between Patricia and Timothy ? context : May is the aunt of Doris . Patricia has a daughter called Doris . Timothy is Charles 's brother ." May has a son called Charles .
output:	"answer : Timothy is the nephew of Patricia ."

ProofWriter.

Depth-0 input:	"context : The cow is round. The cow needs the lion. The cow needs the rabbit. The cow sees the lion. The cow visits the rabbit. The lion is round. The rabbit is kind. The rabbit visits the tiger. The tiger is big. The tiger is kind. The tiger sees the rabbit. The tiger visits the rabbit. If something is kind and it visits the rabbit then it is young. If something sees the tiger and it visits the lion then it sees the rabbit. If something is big and young then it sees the lion. If something visits the rabbit then the rabbit needs the lion. If something is big then it visits the rabbit. If something sees the tiger then it is rough. If something visits the rabbit and it is kind then the rabbit needs the lion. If something is rough and kind then it visits the lion. If something needs the lion then it is big. question : The tiger visits the rabbit."
Depth-0 output:	"answer : True"
Depth-2 input:	"context : Anne is nice. Charlie is blue. Charlie is furry. Charlie is green. Charlie is kind. Charlie is nice. Charlie is red. Fiona is furry. Fiona is green. Harry is furry. Harry is kind. Harry is nice. All nice people are rough. If someone is red and furry then they are blue. Rough, kind people are furry. If Charlie is furry then Charlie is nice. All furry people are nice. If someone is rough then they are kind. If someone is red and nice then they are blue. All furry people are red. question : Harry is not blue."
Depth-2 output:	"answer : False"

HotpotQA.

input:	"question : Which magazine was started first Arthur's Magazine or First for Women ? context : Arthur's Magazine (1844-1846) was an American literary periodical published in Philadelphia in the 19th century. Edited by T.S. Arthur, it featured work by Edgar A. Poe, J.H. Ingraham, Sarah Josepha Hale, and others. In May 1846 it was merged into "Godey's Lady's Book". First for Women is a woman's magazine published by Bauer Media Group in the USA. The magazine was started in 1989. It is based in Englewood Cliffs, New Jersey. In 2011 the circulation of the magazine was 1,310,696 copies."
output:	"answer : Arthur's Magazine"

CoQA.

context:	"context : The Vatican Apostolic Library, more commonly called the Vatican Library or simply the Vat, is the library of the Holy See, located in Vatican City. Formally established in 1475, although it is much older, it is one of the oldest libraries in the world and contains one of the most significant collections of historical texts. It has 75,000 codices from throughout history, as well as 1.1 million printed books, which include some 8,500 incunabula. The Vatican Library is a research library for history, law, philosophy, science and theology. The Vatican Library is open to anyone who can document their qualifications and research needs." [...] "Only a handful of volumes survive from this period, though some are very significant."
input:	context above + "question : When was the Vat formally opened?"
output:	"answer : It was formally established in 1475."
input:	context above + "question : When was the Vat formally opened? answer : It was formally established in 1475. question : what is the library for? answer : research. question : for what subjects?"
output:	"answer : history, and law."
input:	context above + "question : When was the Vat formally opened? answer : It was formally established in 1475. question : what is the library for? answer : research. question : for what subjects? answer : history, and law. question : what else ?"
output:	"philosophy, science and theology."

E GeoQuery Results

In this section we report results of our different models on the GeoQuery (Zelle & Mooney, 1996) benchmark. In particular, we use two versions described by Shaw et al. (2021), focusing on compositional generalization: a train/test split based on query length and a train/test split based on Target Maximum Compound Divergence (TMCD). Each train and test set contains 440 examples.

We trained our models on both of these splits and evaluated the exact match of the predicted output of our models. Below are our average results based on 3 random seeds:

	LENGTH split	**TMCD split**
no-abstraction	24.24% (+- 0.001)	**36.06%** (+- 0.001)
emb-sum	**27.05%** (+- 0.000)	34.47% (+- 0.001)
emb-cat	15.91% (+- 0.002)	18.56% (+- 0.001)
enc-sum	18.64% (+- 0.002)	35.08% (+- 0.001)
enc-cat	17.50% (+- 0.000)	27.58% (+- 0.001)
dec-loss	24.09% (+- 0.000)	30.38% (+- 0.001)

We can see that for the length split, one abstraction model performs better than the baseline (no-abstraction), but on the TMCD split, models with abstraction are not better than the baseline. However, we believe this dataset may not be a good candidate to showcase if abstraction is useful for 2 reasons:

First, all examples in the dataset have a few number of entities (2 maximum):

entities per example	**examples**	**percentage of the dataset**
0	207	23.5%
1	667	75.8%
2	6	0.7%
Total	**880**	**100%**

This makes each abstract input very similar to the original input. Thus the abstract sequence provides very little information to the model.

Second, the dataset as a whole contains a few number of entities. 12% of tokens per input are tagged as entities. This is a relatively small number compared to the other datasets as we can see below.

Fraction of tokens per input in each dataset identified as entities by spacy NER:

Data	**avg (+-std)**
CLUTRR	0.22 (+- 0.019)
Proofwriter	0.36 (+- 0.036)
HotpotQA	0.37 (+- 0.085)
CoQA	0.18 (+- 0.095)
Geoquery	0.12 (+- 0.080)

We can say from these results that in order for the abstraction technique to be useful, the dataset must contain at least more than 2 entities per input sequence.

F Prediction examples

In this section we present output examples of our models on the CLUTRR level 3 test set.

Table 10: CLUTRR test set level 3 output examples. Correct answers are in green and wrong answers are in red for better visibility.

input	**no abstraction**	**emb-sum**	**emb-cat**	**enc-sum**	**enc-cat**	**dec-loss**
Jonathan is the father of Anne . Anne is a aunt to Stephanie . Stephanie is the daughter of Veronica . How is Veronica related to Jonathan ?	Jonathan is Veronica 's father	Jonathan is Veronica 's father	Jonathan is Veronica 's uncle	Jonathan is Veronica 's father	Jonathan is Veronica 's father	Jonathan is Veronica 's father
Stephanie is the granddaughter of Jonathan . Bryant is Stephanie 's father . Eric is a son of Bryant . How are Jonathan and Eric related to each other ?	Eric is the grandson of Jonathan	Eric is Jonathan 's grand-son	Eric is Jonathan 's grand-son	Eric is Jonathan 's grand-son	Eric is Jonathan 's grand-son	Eric is Jonathan 's grand-son
Joyce has a daughter called Stephanie . Betty is a grandmother to Stephanie . Paul has a wife who is Joyce . For Paul , who is Betty ?	Betty is Paul 's mother-in-law	Betty is Paul 's mother-in-law	Betty is Paul 's aunt	Betty is Paul 's mother-in-law	Betty is Paul 's mother-in-law	Betty is Paul 's mother-in-law
Bryant is a son of Jonathan . Jonathan is the husband of Betty . Craig is a son of Bryant . Who is Craig from the point of relation of Betty ?	Craig is Betty 's son	Betty has a grandson who is Craig	Craig is Betty 's grandson	Betty has a grandson who is Craig	Craig is Betty 's son	Craig is the son-in-law of Betty
Stephanie is a granddaughter to Betty . Anne is Bryant 's sister . Bryant is a brother of Stephanie . Who is Anne from the point of relation of Betty ?	Anne is Betty 's grand-daughter	Anne is Betty 's grand-daughter	Anne is Betty 's grand-daughter	Anne is Betty 's grand-daughter	Anne is Betty 's grand-daughter	Anne is Betty 's grand-daughter
score	**4/5**	**5/5**	**3/5**	**5/5**	**4/5**	**4/5**
score on lvl.3 test set reported in Table 2	84.4%	85.3%	60.0%	94.8%	86.1%	74.7%

Out of these 5 examples, the `emb-cat` model makes 2 mistakes (line1 & line3), the `no-abstraction`, `enc-cat`, `dec-loss` models make 1 mistake (line4) and the `emb-sum` and `enc-sum` models make 0 mistake.

The `emb-cat` model mistakes (line1 & line3) are due to the prediction of uncle/aunt relations instead of father/mother-in-law respectively. It is interesting to note that these relations are similar in the sense that they all link one generation to the one just above.

It is also interesting to note that the example in which the `no-abstraction`, `enc-cat` and `dec-loss` models fail (line4), the `emb-cat` model on the other hand answers correctly. In this specific example the correct relationship is "grandson" which links one generation to 2 generations below, however the mistakes made by the failing models only link one generation to 1 below (son, son, son-in-law).