To Transfer or Not to Transfer: Suppressing Concepts from Source Representations

Anonymous authors
Paper under double-blind review

Abstract

With the proliferation of large pre-trained models in various domains, transfer learning has gained prominence where intermediate representations from these models can be leveraged to train better (target) task-specific models, with possibly limited labeled data. Although transfer learning can be beneficial in many applications, it can transfer undesirable information to target tasks that may severely curtail its performance in the target domain or raise ethical concerns related to privacy and/or fairness. In this paper, we propose a novel approach for suppressing the transfer of user-determined semantic concepts (viz. color, glasses, etc.) in intermediate source representations to target tasks without retraining the source model which can otherwise be expensive or even infeasible. Notably, we tackle a bigger challenge in the input data as a given intermediate source representation is biased towards the source task, thus possibly further entangling the desired concepts. We evaluate our approach qualitatively and quantitatively in the visual domain showcasing its efficacy for classification and generative source models. Finally, we provide a concept selection approach that automatically suppresses the undesirable concepts.

1 Introduction

Deep neural networks (DNN) have achieved unprecedented performance in various computer vision, natural language (NLP) problems such as image classification (Sun et al., 2017; Mahajan et al., 2018), object detection (Girshick, 2015; Ren et al., 2015), segmentation (Long et al., 2015; He et al., 2017), question answering (Min et al., 2017; Chung et al., 2017), and machine translation (Zoph et al., 2016; Wang et al., 2018) etc. One of their strengths is the ability to learn task-specific hidden representations rather than relying on predefined image features. In an ideal scenario, there is an abundance of labeled training samples to learn a good hidden representation. However, it is often expensive, time-consuming, or unrealistic to collect sufficient training data. In such scenarios, transfer learning (Pan & Yang, 2009) has emerged as one of the promising learning paradigms. Transfer learning utilizes knowledge from information-rich source tasks to learn a specific (often information-poor) target task.

One of the most widely used approaches for transfer learning is *fine-tuning* (Sharif Razavian et al., 2014) where the target DNN being trained is initialized with the weights of a source DNN that has been pre-trained on a large dataset from a related task. Another popular approach involves combining (matching) the hidden representation (output gradient) of the target model with that of the source model (Jang et al., 2019; Li et al., 2018; Murugesan et al., 2022). These approaches are extensively used in improving prediction performance and robustness of many vision and NLP tasks (Hendrycks et al., 2019; Devlin et al., 2018), while reducing training time and resources. For instance, a source model trained to classify cats vs dogs, can be queried to provide an internal representation of a tiger or a wolf image to guide the target task of classifying tigers vs wolves. Since the source model is trained with a large number of parameters and labeled examples of cats vs dogs, it will have learned several patterns that distinguish the cat images from dog images. It is postulated that *concepts* such as the shape of the tail, eyes, mouth, whiskers, fur, etc. are useful to differentiate them (Neyshabur et al., 2020). It is possible to reuse these learned patterns to generalize to a new and related task. However, transferring from large pre-trained models (fine-tuning or representation transfer) could propagate undesirable *concepts* encoded in source models to downstream tasks. For example, a source model, trained to

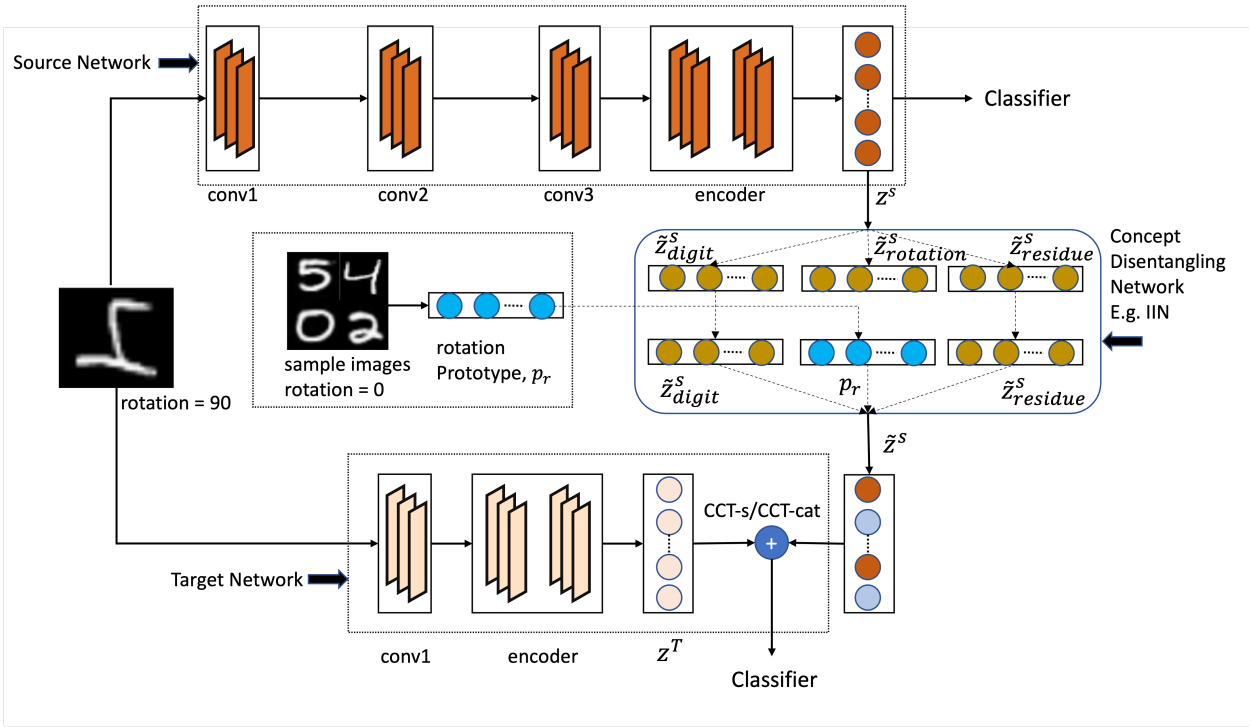

Figure 1: Illustration of our proposed approach on rotated-MNIST dataset. We show how the *rotation* concept is suppressed from the image before transferring it to the target task. First, hidden representation z^s from a pre-trained source network is factorized using a concept disentangling network (CDN) into z^s_k, $k \in K = \{digit, rotation, residue\}$. To suppress the *rotation* concept, the factor for $z^s_{rotation}$ is set to a rotation *prototype*, p_r generated using a few sample images with no rotation. Now the CDN is used to invert the modified factors to $\tilde{z}^s$ which can either be directly used *Controllable Concept Transfer-source (CCT-s)* or concatenated with the target representation z^T *Controllable Concept Transfer-concatenate (CCT-cat)* to train the target task.

classify cats vs dogs, with most cat images in gray-scale and dog images in color, could incorrectly associate the concept of *color* to the images of the dog and pass this biased knowledge to downstream tasks. In real-world applications, this could have serious consequences. Among several examples, Steed & Caliskan (2021) showed that embeddings extracted from pretrained image models exhibit racial and gender bias that they learn from training datasets. Similarly, Kennedy et al. (2020) demonstrated that hate speech classifiers finetuned from BERT (Devlin et al., 2018) resulted in frequent false positives when certain group identifiers (e.g., *Muslim*, *black*) were mentioned in the text.

While there are several approaches to *mitigate* the impact of unintended knowledge transfer in target models, ranging from data augmentation that balances target datasets (Park et al., 2018; Dixon et al., 2018) to adversarial training for generating robust hidden representations against certain spurious concepts (Zhang et al., 2018; Wang et al., 2020; Fan et al., 2021), controllable transfer using the intermediate representation of the source model has been largely unexplored. Typically, large pretrained (source) models are learned with imbalanced/biased data, and retraining these models to remove undesirable concepts might not be ideal. Our work takes a novel concept-based knowledge transfer approach where we address the following question:

How can we most effectively ***control*** *the intermediate representation of a source model by suppressing a specific concept while keeping other concepts (largely) intact before transferring to downstream tasks?*

Towards this goal, we propose a transfer learning method, Controllable Concept Transfer (CCT), to suppress the undesirable concepts in the hidden representation of the source model before transferring to a downstream

task. One can suppress the concepts in the input data (input image) but concepts such as color, rotation, smiling, etc cannot be blocked without affecting other concepts. Note that, in this paper, we consider a more challenging problem than simply suppressing concepts directly in the input representation (say blocking pixels) since the intermediate source representation and the concepts extracted from it could be biased towards the source task. To address this problem, we propose a novel approach leveraging what we term a Concept Disentangling Network (CDN) to disentangle the concepts in the intermediate source representation and suppress/pass them to the target task, which to the best of our knowledge, has not been previously done in transfer learning. Our approach for CDN adapts recent works in interpretable disentanglement of images such as Invertible Interpretable Network (IIN) (Esser et al., 2020), Concept Activation Vectors (Kim et al., 2018; Zhou et al., 2018; Chen et al., 2020). We propose two transfer learning settings and demonstrate our approach to image classification tasks using three real-world datasets. In both these settings, we find that our approach successfully suppresses concepts from the source intermediate representation. In addition, we propose a mutual information-based metric based on Belghazi et al. (2018) to quantify the measure of concept suppression.

Figure 1 illustrates our approach to suppress the concept of *rotation* from the source model using CDN explained later. We evaluate the performance of controllable concept transfer both qualitatively and quantitatively. Our qualitative analysis presents decoded images with different concepts suppressed.

2 Related Work

Transfer Learning from a large pretrained source model is a well-known approach to learning target tasks with limited labels (Pan & Yang, 2009). One of the most common transfer learning techniques is fine-tuning a pretrained source model (Sharif Razavian et al., 2014), where network layers from the source model are frozen, and a new classifier head is trained for the target task. Recent works align the source and target features to transfer relevant knowledge - either by matching network weights (Xuhong et al., 2018; Jang et al., 2019), attention maps (Li et al., 2018; Zagoruyko & Komodakis, 2016), Jacobians (Srinivas & Fleuret, 2018) or model reprogramming (Chen, 2022). Another line of work uses the source model to better guide the target network by transferring feature maps automatically to improve the target task performance (Murugesan et al., 2022). In all the above methods, the transferred knowledge is typically not interpretable. To understand what knowledge is being transferred from source and target networks, a few methods use attention maps to visualize the key features from the source model useful for the target task (Murugesan et al., 2022; Jang et al., 2019) or a series of experimental analyses on the finetuned target model to study the importance of transferred knowledge (Neyshabur et al., 2020). In this paper, we take a different approach to transfer learning and propose a principled way of controlling what semantically meaningful *concepts* can be transferred from the source model to the target task.

With an increasing interest in **Model Interpretability**, several approaches have been proposed to understand the inner workings of deep neural classifiers, specifically through human understandable high-level concepts as activation vectors (Kim et al., 2018; Zhou et al., 2018; Chen et al., 2020), or individual neurons (Erhan et al., 2009; Olah et al., 2017; Zeiler & Fergus, 2014; Bau et al., 2017). However, the representation of the semantic concepts is distributed across the hidden layers of the network (Fong & Vedaldi, 2018) and none of these methods can (confidently) claim that the features (i.e. neurons) identified from intermediate representations are associated *only* with the specific concept and are largely independent of other concepts (Montavon et al., 2017; Yosinski et al., 2015). A related line of work trains the models that explicitly encode concepts in their intermediate representations (Koh et al., 2020; Chen et al., 2020; Losch et al., 2019). However, this approach alters the network architecture and typically deteriorates overall performance (Zhou et al., 2016). Unlike these works, we propose a novel approach to transfer learning by blocking or allowing the relevant concepts transferred from the source model to the target network for better interpretability.

Unlike DNNs, **Generative Models** are trained with the explicit goal to produce images from samples of a specific distribution. Variational auto-encoders (Kumar et al., 2018; Higgins et al., 2017) reconstruct images from a representation whose marginal distribution is matched to a standard normal distribution. Generative Adversarial Networks (GAN) (Goodfellow et al., 2020; Hoang et al., 2018) map samples from a standard normal distribution to realistic images as judged by a discriminator. While these approaches are invertible,

they are not interpretable, limited to representations with a linear structure, and cannot be applied to arbitrary representations from a source network. This motivates our choice for adapting frameworks such as Invertible Neural Networks (Dinh et al., 2014; Jacobsen et al., 2018; Kingma & Dhariwal, 2018; Esser et al., 2020) for our setup as they can identify disentangled concepts for interpretability, invert them and map them back to relevant features in the intermediate representations of the source model. StyleGAN (Karras et al., 2020) is a generative model which can generate images with different "styles". However, this is not appropriate for our setup since latent directional vectors need to be known for concepts that one wishes to manipulate. Although these are known for certain concepts in certain datasets (viz. age, eye ratio in FFHQ dataset) they are not readily available for arbitrary ones that one might want to manipulate. Moreover, finding the latent representation for a given real image which would be required for the StyleGAN is still a topic of active research (Li et al., 2022) as the reconstructions from these latents can be imperfect.

3 Controllable Concept Transfer Method

It has been widely observed that machine learning models learn context-specific correlations in datasets. For example, a model trained to classify different indoor scenes would learn to associate the presence of a *bed* to the output class of "bedroom" vs *couch* to the output class of "living-room". However, spurious associations in the transferred knowledge could hinder the performance of a target task. For instance, an *accent chair* could be exclusively associated with "living-room" and when the model encounters a novel environment where it is present in "bedroom", the source representation could be biased to classify the input as "living-room". The transfer learning method to modify the source intermediate representation to suppress a certain *concept* would prove useful in such situations. The canonical way to suppress a certain concept from hidden representation would be to retrain the model with new images that satisfy the desired constraint. However, it is hard to predict how the retraining affects other related concepts. The goal of our work is to tackle this problem *directly* and modify the hidden representation of the source model in a targeted manner. For instance, in our earlier example, we would ideally want to suppress the concept of *accent chair* without affecting other concepts in the hidden representation of the source model before transferring it to the downstream task. Next, we provide a brief overview of the Concept Disentangling Network based on a recent work on interpretable disentanglement of input representations (Esser et al., 2020), after which we detail our work. Throughout this paper, we use the terms "intermediate representation" and "hidden representation" interchangeably.

3.1 Background: Disentangling semantic concepts in intermediate representation

Let f be the given neural network with L layers that maps the input image $x \in \mathbb{R}^{h \times w \times c1}$ through a series of hidden layers to the final output $f(x)$. Often, intermediate representation $E(x) \in \mathbb{R}^{H \times W \times C2}$ at a hidden layer does not convey any semantic meaning and the mapping from the intermediate representation to semantically meaningful representation is well-defined, whereas the inverse is not straightforward. In this paper, we are interested in invertible representation learning that maps intermediate representation to semantically meaningful concepts and vice verse. Esser et al. (2020) developed an approach to factorize the hidden representation from a model into user-defined semantic concepts. Specifically, they map arbitrary representations into a space of interpretable representations – a non-linear mapping between the two domains. This mapping is invertible, i.e., any modification in the domain of semantic concepts concurrently alters the original representation. In this scenario, it takes the flattened version of $E(x)$, denoted $z \in \mathbb{R}^N$ (where $N = H \cdot W \cdot C$), and factorize it into $\tilde{z} = (\tilde{z}_k)_{k=0}^K \in \mathbb{R}^N$, where each of the $K+1$ factors of $\tilde{z}_k \in \mathbb{R}^{N_k}$ with $\sum_{k=0}^K N_k = N$ represents an interpretable concept that is normally distributed $\mathcal{N}(\tilde{z}_k|0, \mathbf{1})$. Calling this transformation I, we have $\tilde{z} = I(z)$.

To encode semantic representation into each factor $\tilde{z}_k$, they constrain (i) each factor $\tilde{z}_k$ to vary with exactly one interpretable concept and (ii) $\tilde{z}_k$ to be invariant to all other variations. This is ensured through training pairs (x^a, x^b), which specify semantics through similarity, i.e. image pairs that both have a semantic concept of *accent chair* in them. Each semantic concept, indexed by $F \in \{1, ..., K\}$, has image pairs $(x^a, x^b) \sim$

[1]Where h, w, c are height, width and channel dimensions of input image

[2]Where H, W, C are height, width, and channel dimensions of intermediate representation

$p(x^a, x^b|F)$ to the corresponding factor $\tilde{z}_F$. To capture the remaining variability that is not captured by the K concepts, a residual concept $\tilde{z}_0$ is introduced. This ensures that any change made to the factorized semantic concept $\tilde{z}_k$ is reflected in the original representation space. Calling this transformation I^{-1}, we have $I^{-1}(\tilde{z}) = z$. Intuitively, the goal is to have a bijective mapping so that modifications of the disentangled semantic factors correctly translate back to the original representation. Please refer to Algorithm 2 in Appendix and Esser et al. (2020) for further details.

3.2 Concept suppression and transfer

In this section, we focus our attention on controlling the concept transfer by suppressing undesirable concepts in the hidden representation of the source classifier and transferring relevant concepts to the downstream task. To describe our approach, let's continue our running example of classifying "bedroom" vs "living-room". At the high level, the goal is to take the hidden representation at a layer L of the pre-trained model and suppress the *accent-chair* concept without affecting other concepts.

How to suppress a concept? Let us assume that we have a pre-trained source network f^s that takes input images x from a target task and produces hidden representation at layer $L-1$, $f^s_{L-1}(x) = z^s$, i.e., the layer before classifier head c^s_L. Let us define a few semantic concepts specific to the target task as *accent-chair*, *bed* and *couch*. We first train the CDN I to take the hidden representation z^s and factorize it according to concepts such that $\tilde{z}^s_k = (I(z^s))_k$, where $k \in \{accent-chair, bed, couch\}$. Training is done using pairs of images that contain a common concept, i.e., the same *bed* to map $\tilde{z}^s_{bed}$ or the same *couch* for $\tilde{z}^s_{couch}$. In addition, there is a *residue* factor $\tilde{z}^s_{residue}$ that encodes all other variations unaccounted by these concepts. Since the CDN imposes a one-to-one mapping from the original representation space (z^s) to a factorized space ($\tilde{z}^s$), we can edit the factorized representation $\tilde{z}^s_{rotation}$ without affecting the other factors. Given the CDN I, suppose one wants to suppress the *accent-chair* concept. We sample a few example images $\{r_1, ..., r_n\}$ which do not have *accent-chair* and pass them through our pre-trained source network and CDN to obtain their *accent-chair* embedding and take the mean to create a *prototype* embedding, $p_{chair} = \frac{1}{n}\sum_{i=1}^{n}(I(f^s_{L-1}(r_i))_{accent-chair})$, which is indicative of absence of the accent-chair concept.

How to transfer? Next, we proceed to training the target model f^t that takes as input images x and maps to a hidden representation at layer $L-1$, $f^t_{L-1}(x) = z^t$, the layer before classifier head c^t_L. The input image is also passed through the source model to get the source intermediate representation, which is then fed to CDN. The *accent-chair* concept is suppressed by replacing the corresponding factor $\tilde{z}^s_{accent-chair}$ with the *prototype*, p_{chair}. The updated hidden representation $I^{-1}(\tilde{z}^s)$ is then transferred to the target classifier c^t_L. We consider two variations of transferring knowledge from the source model to the target task,

1. **Controllable Concept Transfer – source** (CCT-s) where we freeze the layers up to $L-1$ of source network, attach a classifier head for target task c^t_L and train the classifier head for the target task with updated source representation, $c^t_L(I^{-1}(\tilde{z}^s))$.
2. **Controllable Concept Transfer – concatenate** (CCT-cat) where we concatenate the updated source representation with that of the pre-trained target network before passing it through the target classifier, $c^t_L([I^{-1}(\tilde{z}^s) \oplus z^t])$ where $\oplus$ represents concatenation operation.

The entire pipeline is presented in Figure 1 and Algorithm 1 as CCT-cat (CCT-s follows similarly but would remove the target network f^t and combination operation in Step 15). Note that this approach works for multiple concepts by simply generating each *prototype*, p_i and editing the corresponding factorized representation $\tilde{z}^s_i$ for concept i. The above descriptions are for the case when one knows which concepts are to be blocked (in which lines 18-20 of Algorithm 1 should be ignored).

How to suppress undesirable concepts automatically? It may sometimes be the case that there are too many concepts for a human to manually decide what concepts to transfer/suppress. Some concepts may introduce noise to the target task or one may desire to get insights into which concepts offer performance improvements over the target model. We consider two additional extensions of our framework: 1) **Controllable Concept Transfer – source with concept search** (CCT-s(cs)) and 2) **Controllable Concept Transfer – concatenate with concept search** (CCT-cat(cs)). Both involve a procedure that searches

for the optimal set of concepts to suppress (see Algorithm 3 in Appendix). In practice, we learn a Gumbel-softmax distribution for each concept independently to decide whether the concept should be suppressed or not (line 19 of Algorithm 1). We can also use one Gumbel-softmax for all combination of the concepts but it may be infeasible when we have a large number of concepts. While we use Gumbel-Softmax sampling, other differentiable methods could also be applied to sample from a structured discrete space (e.g., stochastic softmax Paulus et al. (2020)).

Algorithm 1 Controllable Concept Transfer - Concatenate with Concept Search method (CCT-cat(cs))

1: **Inputs:** Target training dataset D_T; Target classifier loss $\mathcal{L}_{c^t}(\cdot)$; Combination operation $\bigoplus$; Seed weight parameters: $\mathcal{W}_{c^t}[0]$; Source pre-trained network f^s; Target pre-trained network f^t; Number of Epochs E; Layer L; $\mathcal{C}$ List of K Concepts; Number of Epochs M between Concept Searches.
2: $I \leftarrow$ TRAIN-CDN
3: $\tilde{\mathcal{C}} \leftarrow \mathcal{C}$
4: **for** $\mathbb{c} \in \mathcal{C}$ **do**
5: Randomly sample n images $\{r_1, r_2, ...r_n\}$ *without* concept $\mathbb{c}$.
6: $p_c \leftarrow \frac{1}{n}\sum_{j=1}^{n}(I(f_L^s(r_j))_{\mathbb{c}})$
7: **end for**
8: Randomly shuffle D_T.
9: **for** *epoch* $\in [1:E]$ **do**
10: **for** *batch* $\in D_T$ **do**
11: $x \leftarrow D_T[batch]$.
12: $\tilde{z}^s \leftarrow I(f_L^s(x))$
13: **for** $\mathbb{c} \in \tilde{\mathcal{C}}$ **do**
14: $\tilde{z}^s_{\mathbb{c}} \leftarrow p_{\mathbb{c}}$
15: **end for**
16: Update $\mathcal{W}_{c^t}[batch] \leftarrow \mathcal{W}_{c^t}[batch-1] - \eta_{batch}\nabla_{\mathcal{W}_{c^t}}\mathcal{L}_{c^t}(f_L^t(x) \bigoplus I^{-1}(\tilde{z}^s))$
17: **end for**
18: **if** epoch mod $M == 0$ **then**
19: $\tilde{\mathcal{C}} \leftarrow$ CONCEPT-SEARCH($\mathcal{C}$)
20: **end if**
21: **end for**
22: **Output:** Trained model c_L^t with last iterate of $\mathcal{W}_{c^t}$

4 How well does Concept Suppression work?

Before we study the the influence of concept suppression on downstream tasks, we explore how well the concepts are suppressed from source hidden representation. In particular, we consider two sets of experiments. (i) In the quantitative experiments, we adopt mutual information (MI) based metric from Belghazi et al. (2018) to measure the MI between concept and hidden representation before and after suppressing a concept. In both cases, we edit the model using a single *prototype* to suppress one concept at a time. (ii) In the qualitative experiments, we use an autoencoder architecture as a source model, which facilitates visualization of concept suppression by decoding CDN-edited hidden representations to human-understandable images.

4.1 Mutual Information Experiment

The goal of this experiment is to quantitatively assess whether information about undesired concepts is contained or 'hiding' in transferred representations. We consider two approaches popular in the interpretable disentanglement of input representations: Invertible Interpretable Network (IIN) (Esser et al., 2020), Concept Activation Vectors (Kim et al., 2018; Zhou et al., 2018; Chen et al., 2020). To formally evaluate the performance of concept suppression in this scenario, we employ an information-theoretic analysis of the transferred representations. Specifically, we measure the mutual information between a specific concept and the hidden representations. To compute mutual information between concepts and neural network representations, we adapt the *mutual information based neural estimator* (MINE) proposed by Belghazi et al.

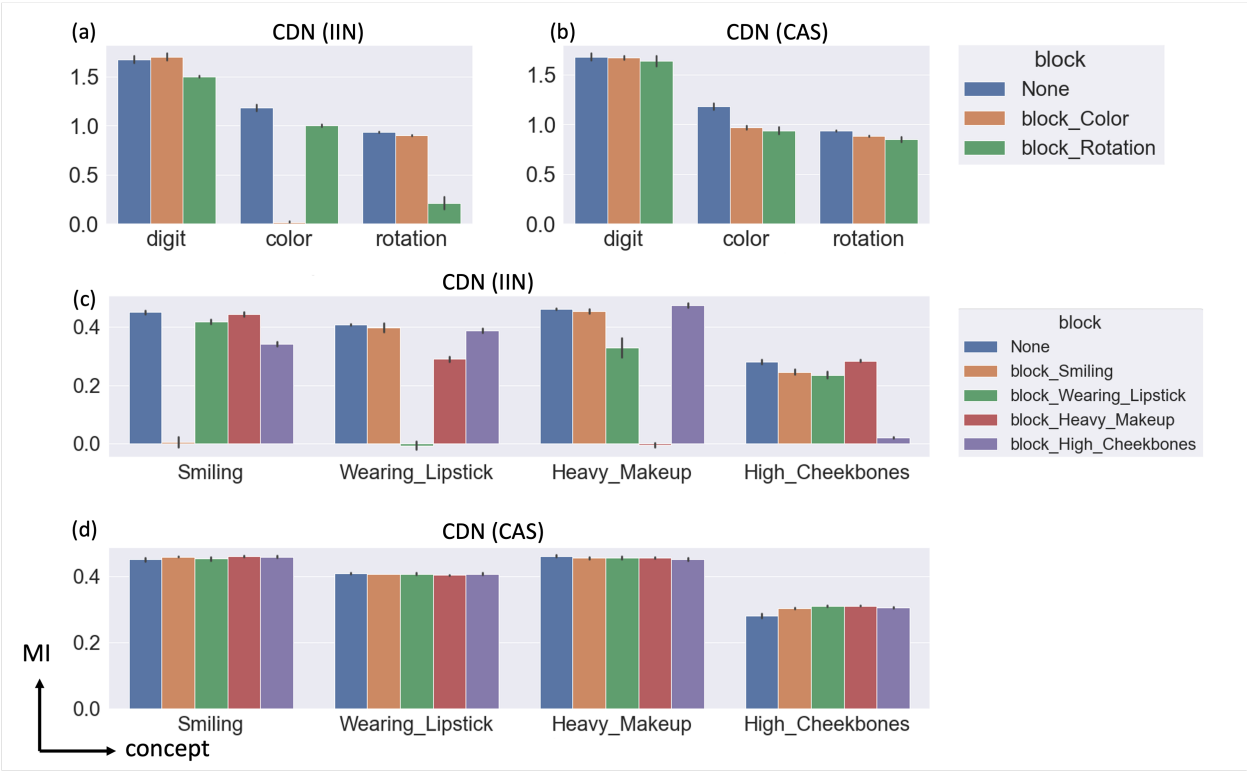

Figure 2: Experiments on mutual information (MI) between concepts and intermediate representation. Each group of bars represents a concept and the color of the bars represents the suppressed concept. MI for rotated-colored-MNIST dataset *digit*, *color*, and *rotation* concepts when *color* and *rotation* are suppressed using (a) CDN (IIN) method and (b) CDN (CAS) method. MI for CelebA dataset where source model is trained on a multi-label classification task to identify 4 different concepts {*Smiling, Wearing_Lipstick, Heavy_Makeup, High_Cheekbones*}. Each concept is then suppressed individually and MI is reported for all concepts using (c) CDN (IIN) method and (d) CDN (CAS) method.

(2018), where the authors present a way to estimate mutual information between high dimensional random variables using a trainable neural network that they term a *statistics network*. In simple words, given two random variables C for concept and Z for hidden representation,

$$I_\Theta(C, Z) = \sup_{\theta \in \Theta} \mathbb{E}_{\mathbb{P}_{CZ}}[T_\theta] - \log(\mathbb{E}_{\mathbb{P}_C \bigotimes \mathbb{P}_Z}[e^{T_\theta}])$$

where the expectations are estimated using samples drawn from $\mathbb{P}_{CZ}$ and $\mathbb{P}_C \bigotimes \mathbb{P}_Z$ while the objective is maximized by gradient ascent. Please refer to Belghazi et al. (2018) for more details.

In particular, we estimate the MI between the concept C and original hidden representation z^s, $I(C, z^s)$, and compare with the MI between concept C and edited hidden representation $\tilde{z}^s$, $I(C, \tilde{z}^s)$. We start with a heterogeneous setup where the source model is trained on the rotated-colored-EMNIST dataset (Cohen et al., 2017), where each colored image is *rotated* by a random angle drawn from $r \in \{90, 180, 270\}$. However, we probe the source model with the rotated-colored-MNIST dataset for MI estimation. Here, MI is measured for *color*, *rotation*, and *digit* for hidden representations – before and after suppressing *color* and *rotation* concepts. To estimate MI, we use the color RGB vector, and angle of rotation as proxy concept random variables C. These results are presented in Figure 2(a). We see that the MI for *digit* does not change much when suppressing the other two concepts. However, the MI for *color* and *rotation* drop significantly when the respective concepts are suppressed.

We proceed to conduct experiments on the CelebA (Liu et al., 2015) dataset, where the source model is trained on a multi-label classification task to identify 4 different concepts $\{Smiling, Wearing_Lipstick, Heavy_Makeup, High_Cheekbones\}$. Next, each concept is suppressed and MI is measured for every concept. To estimate MI, we use the binary value of the presence/absence of each concept as a proxy random variable. Results are presented in Figure 2(b). As demonstrated by the plots, the MI for the suppressed concept reduces (almost) to zero in most cases. These findings suggest that the selected concept is suppressed from the updated hidden representation without significantly affecting the other concepts. Additionally, our choice of suppressing concepts by editing the final layers in the source is also justified by looking at Figure 8, where we see that more complex concepts appear only in the later layers of the source network.

4.2 Comparing against concept activation based suppression (CAS)

To test the need for disentanglement to suppress concepts in hidden representations (IIN), we experiment with concept activation-based suppression (CAS) at the source intermediate representation motivated by previous works (Kim et al., 2018; Zhou et al., 2018; Chen et al., 2020). In this experiment, for each concept, we train a linear classifier based on logistic regression where the hidden representation from the source network is used as input and each model predicts if the concept is present/absent. We then identify the top neurons for each concept based on model coefficients and use them to create the $prototypes, p_i$, for each concept. To suppress a concept i, we just set those candidate neurons to the corresponding p_i. We tested this approach in rotated-colored-MNIST and CelebA by measuring MI values similar to previous experiments. Results are presented in Figure 2(b, d). As demonstrated, the MI for all concepts remains high even after using CAS to suppress them. This suggests that the information about the concept is still present after directly suppressing the hidden representation space. On the other hand, suppressing through the factorized representation of IIN leads to much less mutual information. Hence we chose to use IIN-based CDN for remaining experiments.

4.3 Qualitative experiments using autoencoder architecture

To visually evaluate concept suppression, we replace the source model classifier with an autoencoder. Consider that f^s takes the input image $x \in \mathbb{R}^{h \times w \times c}$ and encodes it into the hidden representation $z = f^s(x) \in \mathbb{R}^N, N = H \cdot W \cdot C$. A decoder d^s is then used to map the hidden representation back to the original image space $\tilde{x} = d^s(z) \in \mathbb{R}^{h \times w \times c}$. First, we consider a simple dataset where we add the concept of *color* to the MNIST dataset (colored-MNIST) (LeCun et al., 1998). This is done by multiplying RGB values in gray-scale MNIST images. A source model is trained to reconstruct the input images and CDN is trained to disentangle the concepts of *digit* and *color*. We then edit the color factor of a few randomly drawn sample images with the *prototype* p_c of *color* as depicted in Figure 3(a) (See Supplementary). Next, we consider a more realistic dataset, CelebA (Liu et al., 2015), which is a large-scale dataset of celebrity faces with attributes. We train the source model to reconstruct CelebA images and then train the CDN to disentangle 3 concepts – *Eyeglasses*, *No_Beard*, and *Smiling*. We then proceed to edit these concepts by using corresponding $prototypes, p_i$. Results for suppressing the *Eyeglasses* concept in a few randomly drawn sample images are presented in Figure 3(b). Additional figures for suppressing the concept of *Smiling* and *No_Beard* are presented in Figure 9. As demonstrated in Figure 3(a), our method can suppress the concept of *color* without affecting the *digit* concept. In Figure 3(b), we see that the concept of *Eyeglasses* is successfully suppressed from sample images, demonstrating that this approach can be used to suppress complicated concepts.

5 Evaluation on Classification tasks

The analysis presented in the previous section demonstrates that concept blocking is feasible. In this section, we consider how concept suppression affects the performance of a downstream target task. In particular, we present two scenarios of image classification tasks: (i) Transfer from the rotated-EMNIST trained source model to the rotated-MNIST classification task, and (ii) Transfer between CelebFaces attribute classifiers. For the former task, we use a deeper 6-layer convolutional neural network (CNN) for the source model

Figure 3: Visualization of concept suppression using an autoencoder as source network. (a) In the first column, we present randomly drawn colored-MNIST images. We then proceed to suppress the concept of *color* from these images and show them in the second row. (b) For CelebA dataset, we consider randomly drawn samples with the *Eyeglasses* attribute and proceed to suppress them. Examples of other concepts being suppressed are in the appendix.

and a 3-layer CNN for the target model. For the CelebFaces task we used a ResNet34 He et al. (2016) pretrained on ImageNet for the source model and ResNet18 for the target model. Additional details about the experimental setup and datasets can be found in Appendix A.3. For each experiment, we consider two variants of transfer: Controllable Concept Transfer – source (CCT-s) and Controllable Concept Transfer – concatenate (CCT-cat) and compare the performance against training the target model independently (TG).

5.1 Transfer between heterogeneous datasets

In this experiment, we study the effect of suppressing the concept of *rotation* in a rotated-EMNIST trained source model to a rotated-MNIST transfer task. First, we pre-train the source model with the rotated-EMNIST dataset, where the goal is to classify 26 different English letters. Next, we train the CDN to factorize the concepts of *digit* and *rotation* using layer $L-1$ representation of the pre-trained source model by probing it with rotated-MNIST images as inputs. Finally, we train the target task of classifying 10 digits without suppressing any concepts, termed CCT-s(noedit) and CCT-cat(noedit), and compare the performance to *rotation* suppressed transfer, termed CCT-s(edit) and CCT-cat(edit). To force the target model to rely on the source model for the *rotation* concept, we vary the amount of rotated training samples in the target dataset from 1% to 75%. Top-1 accuracy for these experiments is presented in Table 1 with maximum accuracy in bold for each column. Each experiment is repeated thrice and the mean accuracy is presented. As expected, at lower percentages of rotated samples (≤ 10), we see that suppressing the concept of *rotation* boosts the performance of transfer with CCT-s(edit) and CCT-cat(edit) performing best. We postulate that, at lower percentages of rotated training samples in the target dataset, the target model relies on the source model for a good representation of the *rotation* concept, and suppressing this concept makes the target task easier. As the percentage of rotated samples in the training data increases, the target model learns a better representation of the *rotation* concept and relies less on the source model. This is evidenced by TG and CCT-cat(noedit) having a comparable performance at a higher percentage of rotated samples.

Table 1: Mean accuracy (over three runs) for rotated-EMNIST to rotated-MNIST transfer task. Experiments are conducted by varying the proportion (%) of rotated samples {90, 180, 270} in the training dataset from 1% to 75%. We compare the performance of three models: Target only (TG), CCT-s and CCT-cat. For CCT-s and CCT-cat we conduct experiments without suppressing any concept (noedit) vs suppressing rotation (edit).

Method	Fraction (%) of rotated images in target task dataset												
	1	2	3	4	5	6	7	8	9	10	25	50	75
TG	0.52	0.58	0.62	0.65	0.68	0.70	0.71	0.73	0.74	0.75	0.84	0.88	0.90
CCT-s(noedit)	0.57	0.59	0.61	0.62	0.63	0.64	0.65	0.66	0.67	0.68	0.75	0.80	0.81
CCT-cat(noedit)	0.61	0.65	0.68	0.70	0.72	0.73	0.75	0.76	0.77	0.78	**0.86**	**0.90**	**0.91**
CCT-s(edit)	**0.68**	**0.68**	0.69	0.69	0.69	0.69	0.69	0.69	0.70	0.70	0.73	0.75	0.77
CCT-cat(edit)	0.64	0.68	**0.71**	**0.73**	**0.74**	**0.76**	**0.76**	**0.77**	**0.78**	**0.79**	0.85	0.89	0.90

5.2 Evaluation on CelebFaces Attributes

In this experiment, we consider a homogeneous setup where the transfer is done between two CelebA tasks. We train the source model to identify 4 different concepts, *Smiling*, *Wearing_Lipstick*, *Heavy_Makeup*, and *High_Cheekbones*, based on a multi-label classifier. We then train a CDN to factorize these concepts using layer $L-1$ representation of the source network. Finally, we train the target binary gender classification task. Specifically, we train several models with/without suppressing concepts, CCT-s(noedit), CCT-cat(noedit), CCT-s(edit), and CCT-cat(edit), and compare against an independently trained target model (TG).

Table 2: Mean accuracy (over three runs) for CelebA transfer task. Experiments are conducted by suppressing concepts *Smiling*, *Wearing_Lipstick*, *Heavy_Makeup*, *High_Cheekbones* one at a time and suppreesing both *Wearing_Lipstick*, *Heavy_Makeup* at once (*Both_Makeup*). As before we compare the performance of three models: TG, CCT-s, and CCT-cat. For CCT-s and CCT-cat we perform experiments with (edit) and without (noedit) concept suppression.

	Suppressed concept				
Method	Smiling	Wearing Lipstick	Heavy Makeup	High Cheekbones	Both Makeup
TG	0.8463				
CCT-s (noedit)	0.9173				
CCT-s (edit)	0.9096	0.8310	0.8493	0.9106	0.7393
CCT-cat (noedit)	**0.9243**				
CCT-cat (edit)	0.9196	0.8746	0.8830	0.9190	0.8353

As seen in Table 2, just using the source model CCT-s(noedit) improves performance in comparison to the independently trained target model (TG). We notice that suppressing the concepts of *Smiling* and *High_Cheekbones*, did not yield a big impact on CCT-s(edit) performance suggesting that these concepts are less relevant to the target task. However, suppressing *Wearing_Lipstick* and *Heavy_Makeup* individually causes a drop in CCT-s(edit) performance. Next, we suppressed both concepts simultaneously and found that the performance dropped further. This suggests that the target classifier is relying on concepts such as *Wearing_Lipstick* and *Heavy_Makeup* for classifying *Male* vs *Not_Male*. We also see that combining both source and target representations in CCT-cat(edit) improves the performance in comparison to CCT-s(edit) while suppressing each concept.

We next add concept search to the same experimental setup and consider additional concepts (up to 10) to account for a situation where the user cannot easily select concepts to suppress themselves. Results are illustrated in Figure 4 using 10 concepts (left) and 4 concepts (right). We see here that concept search can offer similar performance with insights to be gained from examining which concepts are suppressed (most often) which we present in Figure 10. We observe that in 4 concepts experiment, both *Heavy_Makeup* and *Wearing_Lipstick* are suppressed less and in 10 concepts experiment, *Wearing_Lipstick*, *No_Beard* and *Heavy_Makeup* are top 3 least suppressed concepts.

6 Evaluation on co-occurring concepts

Vision datasets often contain concepts that appear together more often than others, and training models using such datasets lead to a phenomenon called *co-occurrence* bias. For instance, a "person" always co-occurs in images with "ski" or "skateboard" (Singh et al., 2020) and hence a model trained to identify these objects would suffer in the absence of "person" in them. In this section, we study two such scenarios where source dataset has such co-occurrence bias and aim to suppress this bias from transferring to a downstream task.

It has been shown that object recognition models can spuriously rely on the image background instead of the objects themselves (Ribeiro et al., 2016). We study this phenomenon using the WaterBirds dataset (Sagawa et al., 2019), where waterbirds (or landbirds) are placed against water (or land) more often in training set while the test set has equal number of waterbirds (or landbirds) placed against water (or

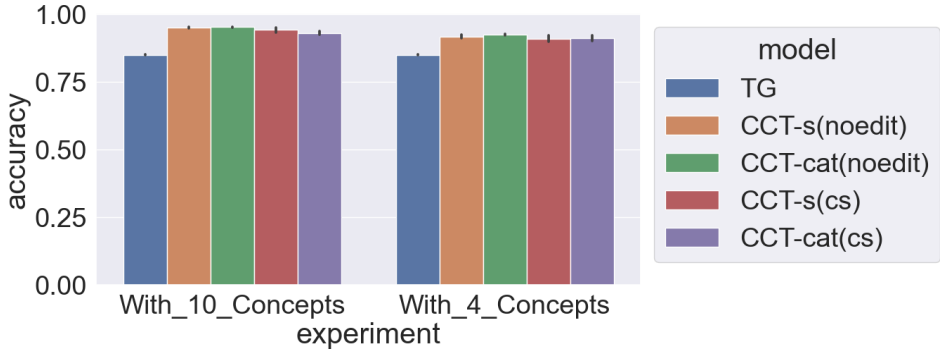

Figure 4: Top-1 accuracy of concept selection methods versus to noedit methods in CelebA experiment. Each bar group represents number of attributes considered i.e. 4 vs 10. Each color represents the model under consideration.

land). In this experiment, we use a ImageNet pretrained source model and train our CDN to factorize *Background* and *BirdType*. We then evaluate our downstream waterbirds task with *Background* suppressed source representation and present results in Table 3. We see that suppressing the background information from source representation improves downstream task performance in both CCT-s (edit) and CCT-cat (edit) models further validating our approach in co-occuring concept tasks.

Table 3: Mean accuracy (over three runs) for WaterBirds transfer task. Experiments are conducted by suppressing *Background* concept. As before we compare the performance of three models: TG, CCT-s, and CCT-cat. For CCT-s and CCT-cat we perform experiments with (edit) and without (noedit) concept suppression.

	Accuracy
TG	0.6592
CCT-s(noedit)	0.7812
CCT-cat(noedit)	0.8459
CCT-s(edit)	0.7956
CCT-cat(edit)	**0.8464**

7 Conclusions

We have seen in this paper how one can effectively suppress certain semantic concepts from being transferred from a source model to a target model while allowing other concepts and information to be transferred. While we were (largely) successful in this endeavor, there may be situations where it is difficult to suppress a certain concept, while allowing others to pass. The reason for this is that concepts can be (statistically or causally) correlated and so suppressing one will lead to also (at least partially) suppressing the other. For instance, it may be impossible to suppress the *Smiling* concept while allowing *High Cheekbones* to be transferred. In the future, it would be interesting to consider such cases where the user not only determines which concepts to suppress but also which to specifically pass and to arrive at a strategy that best satisfies these requirements. The strategy may also involve informing the user that the constraints are impossible to satisfy.

We suppressed concepts by setting the corresponding latent vector in the IIN disentangled representation to mean/median values based on images lacking that concept and then inverting back to the source intermediate representation. However, there may be other ways to set these values, possibly taking inspiration from the explainable AI and fairness literature (Došilović et al., 2018; Mehrabi et al., 2021), where for methods such as SHAP (Lundberg & Lee, 2017) and MACEM (Dhurandhar et al., 2019), there are different ways to determine null/base values indicative of no information.

A drawback of our proposed approach is the need for concept attributes (or labels) required to train CDN. However, if the concepts are well defined, fewer examples could be needed to encode these concepts. We argue that when transferring from a pre-trained source model that provides a rich representation to improve the

target task, ensuring that these representations are not biased towards a particular concept by suppressing it outweighs the cost of annotating. Additionally, image attribute recognition methods such as (Cheng et al., 2018; Zhang et al., 2022) can be used to identify attributes in a given image as a pre-processing step, but that is out of the scope of this work.

References

David Bau, Bolei Zhou, Aditya Khosla, Aude Oliva, and Antonio Torralba. Network dissection: Quantifying interpretability of deep visual representations. In *Proceedings of the IEEE conference on computer vision and pattern recognition*, pp. 6541–6549, 2017.

Mohamed Ishmael Belghazi, Aristide Baratin, Sai Rajeswar, Sherjil Ozair, Yoshua Bengio, Aaron Courville, and R Devon Hjelm. Mine: mutual information neural estimation. *arXiv preprint arXiv:1801.04062*, 2018.

Pin-Yu Chen. Model reprogramming: Resource-efficient cross-domain machine learning. *arXiv preprint arXiv:2202.10629*, 2022.

Zhi Chen, Yijie Bei, and Cynthia Rudin. Concept whitening for interpretable image recognition. *Nature Machine Intelligence*, 2(12):772–782, 2020.

Xiaojuan Cheng, Jiwen Lu, Jianjiang Feng, Bo Yuan, and Jie Zhou. Scene recognition with objectness. *Pattern Recognition*, 74:474–487, 2018.

Yu-An Chung, Hung-Yi Lee, and James Glass. Supervised and unsupervised transfer learning for question answering. *arXiv preprint arXiv:1711.05345*, 2017.

Gregory Cohen, Saeed Afshar, Jonathan Tapson, and Andre Van Schaik. Emnist: Extending mnist to handwritten letters. In *2017 international joint conference on neural networks (IJCNN)*, pp. 2921–2926. IEEE, 2017.

Jacob Devlin, Ming-Wei Chang, Kenton Lee, and Kristina Toutanova. Bert: Pre-training of deep bidirectional transformers for language understanding. *arXiv preprint arXiv:1810.04805*, 2018.

Amit Dhurandhar, Tejaswini Pedapati, Avinash Balakrishnan, Kartik Ahuja Pin-Yu Chen, Karthikeyan Shanmugam, and Ruchir Puri. Model agnostic contrastive explanations for structured data. https://arxiv.org/abs/1906.00117, 2019.

Laurent Dinh, David Krueger, and Yoshua Bengio. Nice: Non-linear independent components estimation. *arXiv preprint arXiv:1410.8516*, 2014.

Laurent Dinh, Jascha Sohl-Dickstein, and Samy Bengio. Density estimation using real nvp. *arXiv preprint arXiv:1605.08803*, 2016.

Lucas Dixon, John Li, Jeffrey Sorensen, Nithum Thain, and Lucy Vasserman. Measuring and mitigating unintended bias in text classification. In *Proceedings of the 2018 AAAI/ACM Conference on AI, Ethics, and Society*, pp. 67–73, 2018.

Filip Karlo Došilović, Mario Brčić, and Nikica Hlupić. Explainable artificial intelligence: A survey. In *2018 41st International Convention on Information and Communication Technology, Electronics and Microelectronics (MIPRO)*, pp. 0210–0215, 2018. doi: 10.23919/MIPRO.2018.8400040.

Dumitru Erhan, Yoshua Bengio, Aaron Courville, and Pascal Vincent. Visualizing higher-layer features of a deep network. *University of Montreal*, 1341(3):1, 2009.

Patrick Esser, Robin Rombach, and Bjorn Ommer. A disentangling invertible interpretation network for explaining latent representations. In *Proceedings of the IEEE/CVF Conference on Computer Vision and Pattern Recognition*, pp. 9223–9232, 2020.

Lijie Fan, Sijia Liu, Pin-Yu Chen, Gaoyuan Zhang, and Chuang Gan. When does contrastive learning preserve adversarial robustness from pretraining to finetuning? *Advances in Neural Information Processing Systems*, 34:21480–21492, 2021.

Ruth Fong and Andrea Vedaldi. Net2vec: Quantifying and explaining how concepts are encoded by filters in deep neural networks. In *Proceedings of the IEEE conference on computer vision and pattern recognition*, pp. 8730–8738, 2018.

Ross Girshick. Fast r-cnn. In *Proceedings of the IEEE international conference on computer vision*, pp. 1440–1448, 2015.

Ian Goodfellow, Jean Pouget-Abadie, Mehdi Mirza, Bing Xu, David Warde-Farley, Sherjil Ozair, Aaron Courville, and Yoshua Bengio. Generative adversarial networks. *Communications of the ACM*, 63(11): 139–144, 2020.

Kaiming He, Xiangyu Zhang, Shaoqing Ren, and Jian Sun. Deep residual learning for image recognition. In *Proceedings of the IEEE conference on computer vision and pattern recognition*, pp. 770–778, 2016.

Kaiming He, Georgia Gkioxari, Piotr Dollár, and Ross Girshick. Mask r-cnn. In *Proceedings of the IEEE international conference on computer vision*, pp. 2961–2969, 2017.

Dan Hendrycks, Kimin Lee, and Mantas Mazeika. Using pre-training can improve model robustness and uncertainty. In *Proceedings of the 36th International Conference on Machine Learning*, pp. 2712–2721, 2019.

Irina Higgins, Loic Matthey, Arka Pal, Christopher Burgess, Xavier Glorot, Matthew Botvinick, Shakir Mohamed, and Alexander Lerchner. beta-vae: Learning basic visual concepts with a constrained variational framework. *ICLR 2018*, 2017.

Quan Hoang, Tu Dinh Nguyen, Trung Le, and Dinh Phung. Mgan: Training generative adversarial nets with multiple generators. In *International conference on learning representations*, 2018.

Sergey Ioffe and Christian Szegedy. Batch normalization: Accelerating deep network training by reducing internal covariate shift. In *International conference on machine learning*, pp. 448–456. PMLR, 2015.

Jörn-Henrik Jacobsen, Arnold Smeulders, and Edouard Oyallon. i-revnet: Deep invertible networks. *arXiv preprint arXiv:1802.07088*, 2018.

Yunhun Jang, Hankook Lee, Sung Ju Hwang, and Jinwoo Shin. Learning what and where to transfer. In *International Conference on Machine Learning*, pp. 3030–3039. PMLR, 2019.

Tero Karras, Samuli Laine, Miika Aittala, Janne Hellsten, Jaakko Lehtinen, and Timo Aila. Analyzing and improving the image quality of stylegan. In *Proceedings of the IEEE/CVF Conference on Computer Vision and Pattern Recognition*, 2020.

Brendan Kennedy, Xisen Jin, Aida Mostafazadeh Davani, Morteza Dehghani, and Xiang Ren. Contextualizing hate speech classifiers with post-hoc explanation. *arXiv preprint arXiv:2005.02439*, 2020.

Been Kim, Martin Wattenberg, Justin Gilmer, Carrie Cai, James Wexler, Fernanda Viegas, et al. Interpretability beyond feature attribution: Quantitative testing with concept activation vectors (tcav). In *International conference on machine learning*, pp. 2668–2677. PMLR, 2018.

Diederik P Kingma and Jimmy Ba. Adam: A method for stochastic optimization. *arXiv preprint arXiv:1412.6980*, 2014.

Durk P Kingma and Prafulla Dhariwal. Glow: Generative flow with invertible 1x1 convolutions. *Advances in neural information processing systems*, 31, 2018.

Pang Wei Koh, Thao Nguyen, Yew Siang Tang, Stephen Mussmann, Emma Pierson, Been Kim, and Percy Liang. Concept bottleneck models. In *International Conference on Machine Learning*, pp. 5338–5348. PMLR, 2020.

A. Kumar, P. Sattigeri, and A. Balakrishnan. Variational inference of disentangled latent concepts from unlabeled observations. *ICLR 2018*, 2018.

Yann LeCun, Léon Bottou, Yoshua Bengio, and Patrick Haffner. Gradient-based learning applied to document recognition. *Proceedings of the IEEE*, 86(11):2278–2324, 1998.

Fengjun Li, Xin Feng, Fanglin Chen, Guangming Lu, and Wenjie Pei. Learning generalizable latent representations for novel degradations in super-resolution. In *Proceedings of the 30th ACM Intl. Conference on Multimedia*, 2022.

Xingjian Li, Haoyi Xiong, Hanchao Wang, Yuxuan Rao, Liping Liu, and Jun Huan. Delta: Deep learning transfer using feature map with attention for convolutional networks. In *International Conference on Learning Representations*, 2018.

Ziwei Liu, Ping Luo, Xiaogang Wang, and Xiaoou Tang. Deep learning face attributes in the wild. In *Proceedings of International Conference on Computer Vision (ICCV)*, December 2015.

Jonathan Long, Evan Shelhamer, and Trevor Darrell. Fully convolutional networks for semantic segmentation. In *Proceedings of the IEEE conference on computer vision and pattern recognition*, pp. 3431–3440, 2015.

Max Losch, Mario Fritz, and Bernt Schiele. Interpretability beyond classification output: Semantic bottleneck networks. *arXiv preprint arXiv:1907.10882*, 2019.

Mario Lucic, Karol Kurach, Marcin Michalski, Sylvain Gelly, and Olivier Bousquet. Are gans created equal? a large-scale study. *Advances in neural information processing systems*, 31, 2018.

Scott M. Lundberg and Su-In Lee. A unified approach to interpreting model predictions. In *Advances in Neural Information Processing Systems*, pp. 4765–4774, 2017.

Dhruv Mahajan, Ross Girshick, Vignesh Ramanathan, Kaiming He, Manohar Paluri, Yixuan Li, Ashwin Bharambe, and Laurens Van Der Maaten. Exploring the limits of weakly supervised pretraining. In *Proceedings of the European conference on computer vision (ECCV)*, pp. 181–196, 2018.

Ninareh Mehrabi, Fred Morstatter, Nripsuta Saxena, Kristina Lerman, and Aram Galstyan. A survey on bias and fairness in machine learning. *ACM Computing Surveys*, 2021.

Sewon Min, Minjoon Seo, and Hannaneh Hajishirzi. Question answering through transfer learning from large fine-grained supervision data. *arXiv preprint arXiv:1702.02171*, 2017.

Grégoire Montavon, Sebastian Lapuschkin, Alexander Binder, Wojciech Samek, and Klaus-Robert Müller. Explaining nonlinear classification decisions with deep taylor decomposition. *Pattern recognition*, 65: 211–222, 2017.

Keerthiram Murugesan, Vijay Sadashivaiah, Ronny Luss, Karthikeyan Shanmugam, Pin-Yu Chen, and Amit Dhurandhar. Auto-transfer: Learning to route transferrable representations. *arXiv preprint arXiv:2202.01011*, 2022.

Behnam Neyshabur, Hanie Sedghi, and Chiyuan Zhang. What is being transferred in transfer learning? *arXiv preprint arXiv:2008.11687*, 2020.

Chris Olah, Alexander Mordvintsev, and Ludwig Schubert. Feature visualization. *Distill*, 2(11):e7, 2017.

Sinno Jialin Pan and Qiang Yang. A survey on transfer learning. *IEEE Transactions on knowledge and data engineering*, 22(10):1345–1359, 2009.

Ji Ho Park, Jamin Shin, and Pascale Fung. Reducing gender bias in abusive language detection. *arXiv preprint arXiv:1808.07231*, 2018.

Max B. Paulus, Dami Choi, Daniel Tarlow, Andreas Krause, and Chris J. Maddison. Gradient estimation with stochastic softma tricks. *Advances in neural information processing systems*, 34, 2020.

Shaoqing Ren, Kaiming He, Ross Girshick, and Jian Sun. Faster r-cnn: Towards real-time object detection with region proposal networks. *Advances in neural information processing systems*, 28:91–99, 2015.

Marco Tulio Ribeiro, Sameer Singh, and Carlos Guestrin. " why should i trust you?" explaining the predictions of any classifier. In *Proceedings of the 22nd ACM SIGKDD international conference on knowledge discovery and data mining*, pp. 1135–1144, 2016.

Shiori Sagawa, Pang Wei Koh, Tatsunori B Hashimoto, and Percy Liang. Distributionally robust neural networks for group shifts: On the importance of regularization for worst-case generalization. *arXiv preprint arXiv:1911.08731*, 2019.

Ali Sharif Razavian, Hossein Azizpour, Josephine Sullivan, and Stefan Carlsson. Cnn features off-the-shelf: an astounding baseline for recognition. In *Proceedings of the IEEE conference on computer vision and pattern recognition workshops*, pp. 806–813, 2014.

Krishna Kumar Singh, Dhruv Mahajan, Kristen Grauman, Yong Jae Lee, Matt Feiszli, and Deepti Ghadiyaram. Don't judge an object by its context: Learning to overcome contextual bias. In *Proceedings of the IEEE/CVF Conference on Computer Vision and Pattern Recognition*, pp. 11070–11078, 2020.

Suraj Srinivas and François Fleuret. Knowledge transfer with jacobian matching. In *International Conference on Machine Learning*, pp. 4723–4731. PMLR, 2018.

Ryan Steed and Aylin Caliskan. Image representations learned with unsupervised pre-training contain human-like biases. In *Proceedings of the 2021 ACM conference on fairness, accountability, and transparency*, pp. 701–713, 2021.

Chen Sun, Abhinav Shrivastava, Saurabh Singh, and Abhinav Gupta. Revisiting unreasonable effectiveness of data in deep learning era. In *Proceedings of the IEEE international conference on computer vision*, pp. 843–852, 2017.

Catherine Wah, Steve Branson, Peter Welinder, Pietro Perona, and Serge Belongie. The caltech-ucsd birds-200-2011 dataset. 2011.

Yijun Wang, Yingce Xia, Li Zhao, Jiang Bian, Tao Qin, Guiquan Liu, and Tie-Yan Liu. Dual transfer learning for neural machine translation with marginal distribution regularization. In *Proceedings of the AAAI Conference on Artificial Intelligence*, volume 32, 2018.

Zeyu Wang, Klint Qinami, Ioannis Christos Karakozis, Kyle Genova, Prem Nair, Kenji Hata, and Olga Russakovsky. Towards fairness in visual recognition: Effective strategies for bias mitigation. In *Proceedings of the IEEE/CVF conference on computer vision and pattern recognition*, pp. 8919–8928, 2020.

LI Xuhong, Yves Grandvalet, and Franck Davoine. Explicit inductive bias for transfer learning with convolutional networks. In *International Conference on Machine Learning*, pp. 2825–2834. PMLR, 2018.

Jason Yosinski, Jeff Clune, Anh Nguyen, Thomas Fuchs, and Hod Lipson. Understanding neural networks through deep visualization. *arXiv preprint arXiv:1506.06579*, 2015.

Sergey Zagoruyko and Nikos Komodakis. Paying more attention to attention: Improving the performance of convolutional neural networks via attention transfer. *arXiv preprint arXiv:1612.03928*, 2016.

Matthew D Zeiler and Rob Fergus. Visualizing and understanding convolutional networks. In *European conference on computer vision*, pp. 818–833. Springer, 2014.

Brian Hu Zhang, Blake Lemoine, and Margaret Mitchell. Mitigating unwanted biases with adversarial learning. In *Proceedings of the 2018 AAAI/ACM Conference on AI, Ethics, and Society*, pp. 335–340, 2018.

Ji Zhang, Jean-Paul Ainam, Li-hui Zhao, Wenai Song, and Xin Wang. Scene recognition with objectness, attribute and category learning. *arXiv preprint arXiv:2207.10174*, 2022.

Bolei Zhou, Aditya Khosla, Agata Lapedriza, Aude Oliva, and Antonio Torralba. Learning deep features for discriminative localization. In *Proceedings of the IEEE conference on computer vision and pattern recognition*, pp. 2921–2929, 2016.

Bolei Zhou, Agata Lapedriza, Aditya Khosla, Aude Oliva, and Antonio Torralba. Places: A 10 million image database for scene recognition. *IEEE transactions on pattern analysis and machine intelligence*, 40(6): 1452–1464, 2017.

Bolei Zhou, Yiyou Sun, David Bau, and Antonio Torralba. Interpretable basis decomposition for visual explanation. In *Proceedings of the European Conference on Computer Vision (ECCV)*, pp. 119–134, 2018.

Barret Zoph, Deniz Yuret, Jonathan May, and Kevin Knight. Transfer learning for low-resource neural machine translation. *arXiv preprint arXiv:1604.02201*, 2016.

A Appendix

A.1 Datasets

For the bulk of our experiments in Sections 4 and 5 we use the MNIST (LeCun et al., 1998), EMNIST (Cohen et al., 2017) and CelebFaces Attributes (CelebA) (Liu et al., 2015) datasets. Few examples from each dataset and corresponding concepts are presented in Figure 5

MNIST. MNIST is a handwritten digits classification dataset with 10 digits. There are 60,000 training examples and 10,000 testing examples. It is a subset of a larger set from National Institute of Standards and Technology (NIST) where each image is size-normalized and centered in a fixed-size image. We introduce concept of *rotation* to these images by rotating 75% (unless otherwise specified) of images by one of 4 possible values $\{90, 180, 270\}$. Concept of *color* is added to images by multiplying each image channel with corresponding [R,G,B] values drawn from a uniform distribution.

EMNIST. EMNIST is a set of handwritten characters derived from NIST Special Database 19. For our experiments we use the EMNIST Letters dataset, which is a 26 class classification of english letters. There are 88,800 training examples and 14,800 testing examples. We introduce concept of *rotation* to these images by rotating 75% (unless otherwise specified) of images by one of 4 possible values $\{90, 180, 270\}$. Concept of *color* is added to images by multiplying each image channel with corresponding [R,G,B] values drawn from a uniform distribution.

CelebFaces Attributes. CelebA is a large-scale face attributes prediction dataset with more than 200,000 images. Each image has 40 different attribute annotations. There are 162,770 training examples, 19962 test examples and 19867 validation examples. For our experiments, in Sections 4 we use concepts of $\{Eyeglasses, No_Beard, Smiling\}$ and for experiments in 5 we use $\{Smiling, Wearing_Lipstick, Heavy_Makeup, High_Cheekbones\}$. For concept search experiment involving 10 concepts, we chose $\{$"$Smiling$", "$Heavy_Makeup$", "$Wearing_Lipstick$", "$High_Cheekbones$", "$Mouth_Slightly_Open$", "$Wearing_Necklace$", "$Oval_Face$", "$Eyeglasses$", "No_Beard", "$Bangs$"$\}$.

WaterBirds. Waterbirds dataset combines bird photographs from the Caltech-UCSD Birds-200-2011 (CUB) dataset (Wah et al., 2011) with image backgrounds from the Places dataset (Zhou et al., 2017). Each bird is labelled as one of Y = waterbird, landbird and place it on one of A = water background, land background, In the training set waterbirds (landbirds) more frequently (90%) appear against a water (land) background, however in the test set there are equal number of samples in each four possible scenarios (waterbird-water, waterbird-land, landbird-water, landbird-land).

A.2 Models

To describe the architecture used in these experiments, we use the following notation:

- Conv2d(c_{in}, c_{out}, k, s, p): A two dimensional convolution operation that takes c_{in} input channels and produce c_{out} output channels. A square kernel of size k is used. s is the stride and p is the padding.

Figure 5: Example images for rotated-colored-MNIST, rotated-colored-EMNIST and CelebFaces Attributes.

- ConvT2d(c_{in}, c_{out}, k, s, p): A two dimensional transposed convolution operation that takes c_{in} input channels and produce c_{out} output channels. A square kernel of size k is used. s is the stride and p is the padding.
- Linear(c_{in}, c_{out}): A linear layer that maps an input vector $v_1 \in \mathbb{R}^{c_{in}}$ to an output vector $v_2 \in \mathbb{R}^{c_{out}}$.

Autoencoder Architecture

The architecture for our Autoencoder experiment presented in 4 is based on Lucic et al. (2018). Similar to Esser et al. (2020), we replace the batch normalization Ioffe & Szegedy (2015) by activation normalization Kingma & Dhariwal (2018). Details regarding the architecture can be found in Table 4.

Table 4: Architecture of autoencoder model. Input images have size of $h \times w \times c$ and are quadratic in nature $h = w$

Encoder	**Decoder**
Conv2d(3, 64, 4, 2, 1), ActNorm, LeakyReLU(0.2)	ConvT2d(z, 512, $h/16$, 1, 0), ActNorm, LeakyReLU(0.2)
Conv2d(64, 128, 4, 2, 1), ActNorm, LeakyReLU(0.2)	ConvT2d(512, 256, 4, 2, 1), ActNorm, LeakyReLU(0.2)
Conv2d(128, 256, 4, 2, 1), ActNorm, LeakyReLU(0.2)	ConvT2d(256, 128, 4, 2, 1), ActNorm, LeakyReLU(0.2)
Conv2d(256, 512, 4, 2, 1), ActNorm, LeakyReLU(0.2)	ConvT2d(128, 64, 4, 2, 1), ActNorm, LeakyReLU(0.2)
Conv2d(512, $2 \cdot z$, $h/16$, 1, 0)	ConvT2d(64, 3, 4, 2, 1), Tanh

MNIST/EMNIST experiments

We use two different architectures for this transfer learning setup. A larger 6 layer network for source model which is the same as the encoder block of auto-encoder presented in Table 4 with a fully connected layer as classifier attached at the end (see Table 5). A smaller 3 layer network for target model (see Table 6).

Table 5: Architecture of source model

Encoder	**Classification Head**
Conv2d(3, 64, 4, 2, 1), ActNorm, LeakyReLU(0.2)	Linear(z^s, $n_{classes}$)
Conv2d(64, 128, 4, 2, 1), ActNorm, LeakyReLU(0.2)	
Conv2d(128, 256, 4, 2, 1), ActNorm, LeakyReLU(0.2)	
Conv2d(256, 512, 4, 2, 1), ActNorm, LeakyReLU(0.2)	
Conv2d(512, z^s, $h/16$, 1, 0)	

Table 6: Architecture of source model

Encoder	**Classification Head**
Conv2d(3, 64, 4, 2, 1), ActNorm, LeakyReLU(0.2)	Linear(z^t, $n_{classes}$)
Conv2d(64, z^t, $h/16$, 1, 0)	

CelebFaces and Waterbirds experiments

We use two different architectures for this transfer learning setup. A larger ResNet34 for source model with a fully connected layer as classifier attached at the end. A smaller ResNet18 network for target model with a fully connected layer attached at the end.

Concept Distentangling Network

As described in Section 3.1, we use the Invertible Neural Network proposed in (Esser et al., 2020) - Invertible Interpretable Network. In this implementation, the network consists of three invertible layers stacked one on to of another to create an invertible *block*: coupling blocks (Dinh et al., 2016), actnorm (Kingma & Dhariwal, 2018) blocks and shuffling blocks. After the input representation z^s is passed through several invertible blocks, the output is split into K factors $(\tilde{z_k^s})_{k=0}^{K}$. We refer readers to (Esser et al., 2020) for further details.

Algorithm for training CDN

Algorithm 2 TRAIN-CDN: Train Concept Disentangling Network

Inputs: CDN training dataset D_I; CDN loss $\mathcal{L}_{\mathcal{I}}(\cdot)$; Seed weight parameters: $\mathcal{W}_I[0]$; Source pre-trained network f^s; Number of Epochs E', Layer L, K List of Concepts $\mathcal{C}$ to factorize.
Randomly shuffle D_I.
for $epoch \in [1 : E']$ **do**
  for $batch \in D_I$ **do**
    $(x_a, x_b|\mathbb{c}) \leftarrow D_I[batch]$. Where (x_a, x_b) are pairs of samples encoding concept $\mathbb{c} \in \mathcal{C}$.
    $(z_a^s, z_b^s) \leftarrow (f_L^s(x_a), f_L^s(x_b))$.
    $\mathcal{W}_I[batch] \leftarrow \mathcal{W}_I[batch-1] - \eta_{batch,I} \nabla_{\mathcal{W}_I} \mathcal{L}_{\mathcal{I}}((z_a^s, z_b^s)|\mathbb{c})$.
  end for
end for
Output: Trained model I with last iterate of $\mathcal{W}_I$

Algorithm for Concept Search

Algorithm 3 CONCEPT-SEARCH: Search Concepts to Suppress

Inputs: List of K Concepts $\mathcal{C}$; Number of Epochs E''; $\mathcal{W}_{cs}$ from previous epoch.
Initialize $Gumbel\text{-}Softmax$ weights $\mathcal{W}_{cs}^{\mathbb{c}}$ randomly if not initialized, $\forall \mathbb{c} \in \mathcal{C}$.
for $epoch \in [1 : E'']$ **do**
  for $batch \in D_T$ **do**
    $\tilde{\mathcal{C}} \leftarrow Gumbel\text{-}Softmax\ (\mathcal{W}_{cs})$.
    $x \leftarrow D_T[batch]$.
    $\tilde{z}^s \leftarrow I(f_L^s(x))$.
    for $\mathbb{c} \in \tilde{\mathcal{C}}$ **do**
      $\tilde{z}_{\mathbb{c}}^s \leftarrow p_{\mathbb{c}}$
    end for
    $\mathcal{W}_{cs}[batch] \leftarrow \mathcal{W}_{cs}[batch-1] - \eta_{batch,cs} \nabla_{\mathcal{W}_{cs}} \mathcal{L}_{c^t}(f_L^t(x) \bigoplus I^{-1}(\tilde{z}^s))$.
  end for
end for
Output: Selected Concepts $\tilde{\mathcal{C}}$.

Statistics Network

For mutual information based experiments in Section 4, we adapt a statistics network proposed in Belghazi et al. (2018). We use a custom sequence of 4 layer network that takes intermediate representation Z and concept vector C to estimate the mutual information between them. Details about the architecture is presented in Table 7.

Table 7: Architecture of statistics network for mutual information estimation.

Statistics Network
ConcatLayer(Z,C)
Linear($\|Z\| + \|C\|$, 100), ReLU()
Linear(100, 100), ReLU()
Linear(100, 1), ReLU()

A.3 Experimental details

For our experimental analysis in the main paper, we set the number of epochs for training to $E = 50$ for all models. We train all models using a batch size of 25 and a learning rate of 10^{-4} for the Adam optimizer

(Kingma & Ba, 2014). All models were randomly initialized before training. While training source classifier, CDN, target classifier, we use different samples to ensure that each model is trained with non-overlapping samples. For example, we train the source network in CelebA experiments with the standard training dataset, CDN and target classifier with a split of validation samples. Testing is done on the standard test dataset. Statistics network is trained by querying pre-trained source model with standard validation dataset and testing on standard test dataset. For creating prototypes for concepts, we use 100 samples.

The models were trained in parallel with the specifications shown in Table 8.

Resource	**Setting**
CPU	IBM Power 9 CPU @ 3.15GHz
Memory	512GB
GPUs	1 x NVIDIA Tesla V100 16 GB
Disk	1.2 TB
OS	RedHat8

Table 8: Resources used for training

A.4 Additional experiments

Choosing the operation for creating prototypes

In order to to create prototypes for each concept, we first query the pre-trained source model and CDN with 100 images that don't have a concept, and aggregate the corresponding concept factor in CDN output. To choose the right aggregation factors, we experimented with simple operations such as *mean*, *median*, *mode* and setting the factor to *zero*. In order to visualize how effective each aggregation is at suppressing a concept, we visualize a few images reconstructed by using auto-encoder based source network as detailed in Section 4.1. We present these results for colored-MNIST images with *color* concept suppressed in 6 and CelebA images with *Eyglasses* concept suppressed in 7. We find the *mean* and *median* performs the best and we chose *mean* for rest of the experiments presented in Sections 4 and 5.

Figure 6: Visualization of *color* concept suppression using prototypes created by different aggregation operators in colored-MNIST images. We find that *median* and *mean* performs the best.

Figure 7: Visualization of *Eyeglasses* concept suppression using prototypes created by different aggregation operators in CelebA images. We find that *median* and *mean* performs the best.

Concept suppression at different layers of the network

In this experiment, we compute mutual information for each concept in rotated-colored-MNIST images at different layers of the source network. As demonstrated in Figure 8, we observe that only concept of *color* is learned at layer 2, which is successfully suppressed. MOre complicated concepts such as *digit* and *rotation* are only learned in later layers. It is thus best to intervene (i.e. suppress) in the final layer (i.e. layer 6), where the model has a good representation of all concepts before transferring the representation to downstream tasks.

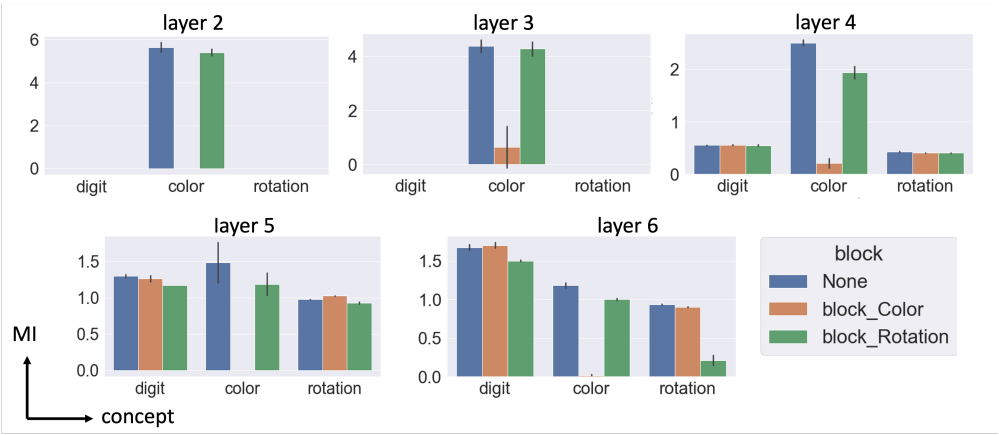

Figure 8: Experiment comparing concept suppressing using hidden representations from different layers for the rotated-colored-MNIST dataset. As can be seen the *color* concept is learned first followed by *digit* and *rotation*. It is thus best to intervene (i.e. suppress) in the final layer (i.e. layer 6) where the model has learned the critical concepts such as *digit* which we want to transfer.

Autoencoder based concept removal images

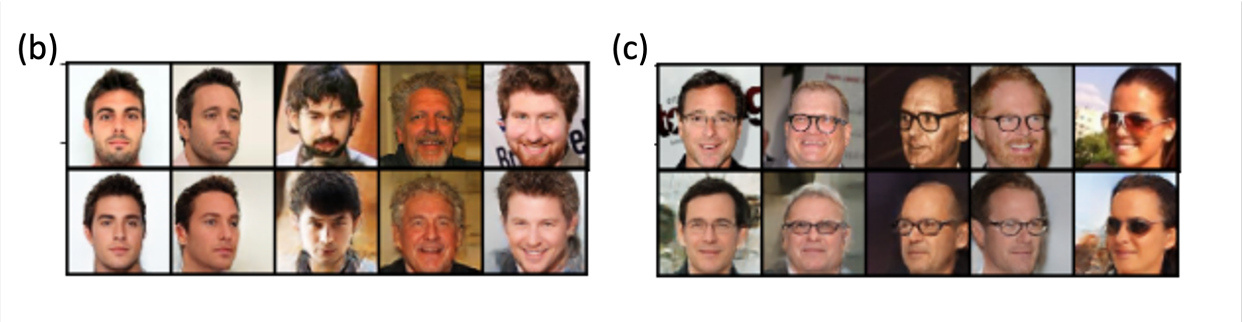

Figure 9: Visualization of concept suppression using an autoencoder as source network. For CelebA dataset, we consider randomly drawn samples with *Beard* & *Smiling* attributes and proceed to suppress them individually. These results are presented in (a) and (b) respectively

Distribution of suppressed concepts in concept search experiments

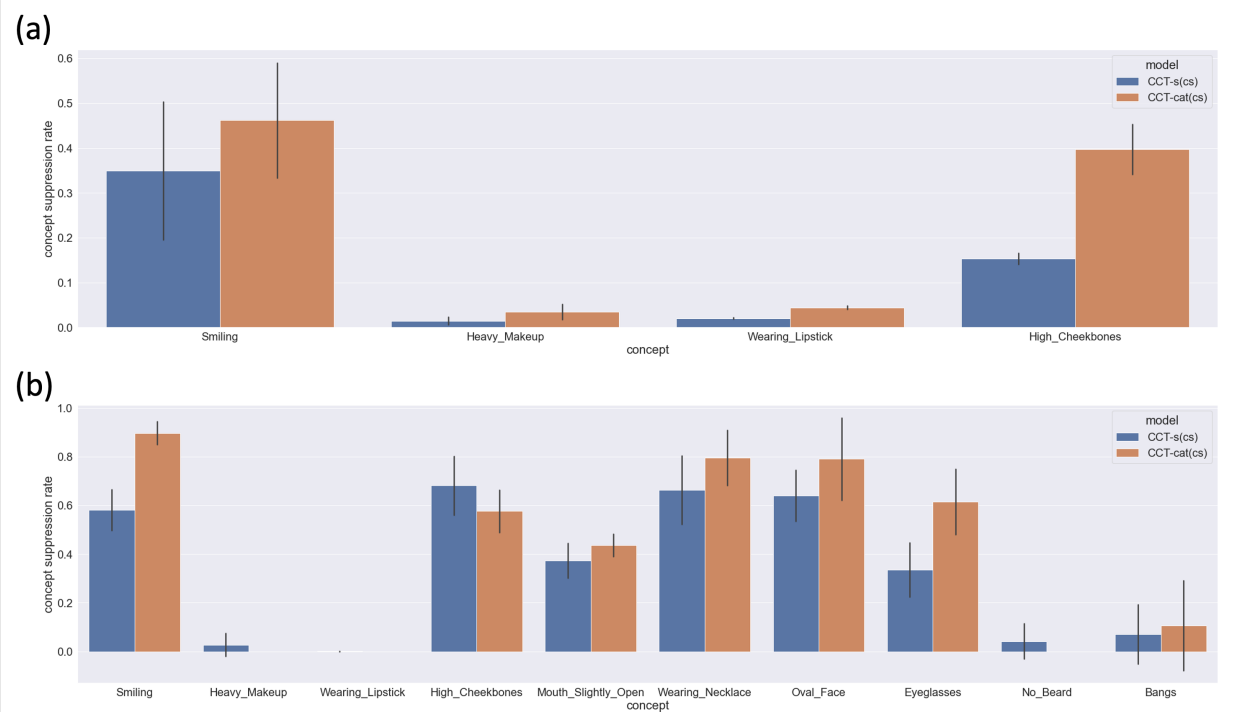

Figure 10: Distribution of concept suppression in the concept search experiments (i.e., CCT-s(cs) and CCT-cat(cs)). We find that the suppressed concepts were meaningful for the task of Male vs. not Male classification, i.e., concepts not related to the task such as *Smiling*, *High_Cheekbones*, and *Oval_Face* were more heavily suppressed. The concept suppression rate (a higher value indicates more suppression) is plotted.