HYPERTRANSFORMER: ATTENTION-BASED CNN MODEL GENERATION FROM FEW SAMPLES

Anonymous authors
Paper under double-blind review

ABSTRACT

In this work we propose *a HyperTransformer*, a transformer based model that generates all weights of a CNN model directly from the support samples. This approach allows to use a high-capacity model for encoding task-dependent variations in the weights of a smaller model. We show for multiple few-shot benchmarks with different architectures and datasets that our method beats or matches that of the traditional learning methods in a few-shot regime. Specifically, we show that for very small target models, our method can generate significantly better performing models than traditional few-shot learning methods. For larger models we discover that applying generation to the last layer only, allows to produce competitive or better results while being end-to-end differentiable. Finally, we extend our approach to semi-supervised regime utilizing unlabeled samples in the support set and further improving few-shot performance in the presence of unlabeled data.

1 INTRODUCTION

In few-shot learning, a conventional machine learning paradigm of fitting a parametric model to training data is taken to a limit of extreme data scarcity where entire categories are introduced with just one or few examples. A generic approach to solving this problem uses training data to identify parameters $\boldsymbol{\phi}$ of a *learner* $a_{\boldsymbol{\phi}}$ that given a small batch of examples for a particular task (called a *support* set) can solve this task on unseen data (called a *query* set).

One broad family of few-shot classification methods frequently referred to as *metric-based learning*, relies on pretraining a low-dimensional embedding $\boldsymbol{e}_{\boldsymbol{\phi}}(\cdot)$ and then using some distance in the embedding space to label query samples based on their closeness to known labeled support samples. These methods proved effective on numerous benchmarks (see Tian et al. (2020) for review and references), however the capabilities of the learner are limited by the capacity of the architecture itself, as these methods try to build a universal embedding function.

On the other hand, *optimization-based methods* such as seminal MAML algorithm (Finn et al., 2017) can fine-tune the embedding $\boldsymbol{e}_{\boldsymbol{\phi}}$ by performing additional SGD updates on all parameters $\boldsymbol{\phi}$ of the model producing it. This partially addresses the constraints of metric-based methods by learning a new embedding for each new task. However, in many of these methods, all of the knowledge extracted during training on different tasks and describing the learner $a_{\boldsymbol{\phi}}$ still has to "fit" into the same number of parameters as the model itself. Such limitation becomes more severe as the target models get smaller, while the richness of the task set increases.

In this paper we propose a new few-shot learning approach that allows to decouple the complexity of the *task space* from the complexity of individual tasks. The main idea is to use transformer model (Vaswani et al., 2017) that given few-shot task episode generates an entire inference model by producing all model weights in a single pass. This allows to encode the intricacies of the available training data inside the transformer model, while still producing specialized tiny models that can solve individual tasks.

We start by observing that the self-attention mechanism is well suited to be the underlying mechanism for the few-shot CNN weight generator. In contrast with earlier CNN- (Zhao et al., 2020) or BiLSTM-based approaches (Ravi & Larochelle, 2017), the transformer model is invariant to sample permutations and can handle unbalanced datasets with a varying number of samples per category. Furthermore, we demonstrate that a single-layer self-attention model can replicate a sim-

plified gradient-descent-based learning algorithm. Varying transformer parameters we demonstrate that this high performance can be attributed to additional capacity of the transformer model that decouples its complexity from that of the generated CNN.

We then extend our method to support unlabeled samples by using special input token concatenated to unlabeled samples to encode unknown labels. In our experiments, we observe that using transformers with two or more layers, we achieve better performance by adding unlabeled data into the support set. We explain our results in Section 4.3 where we show that such transformer with at least two layers can encode nearest-neighbor style algorithm that associates unlabeled samples with similar labeled examples. In essence, by training the weight generator to produce CNN models with best possible performance on a query set, we teach the transformer to utilize unlabeled samples without having to manually introduce additional optimization objectives.

We show that by generating all layers of the CNN model we can improve both the training and test accuracies of CNN models below a certain size. The training accuracy can be viewed as a capability of the generated CNN model to adapt to tasks seen at training time, whereas the test accuracy computed on unseen categories characterizes the generalization capability of this model adaptation mechanism. We empirically demonstrate the expected increase of the model training and test accuracies with the increase of the layer size and the number of generated layers (see Figure 3). Interestingly, generation of the logits layer alone appears to be "sufficient" above a certain model size threshold. This threshold is expected to depend on the variability and the complexity of the training tasks. We conjecture that this might reflect the fact that models are sufficiently expressive for the benchmarks we considered, or that additional regularization is needed to prevent overfitting of the meta-learning models.

Finally, in addition to being able to decouple the complexity of the task distribution from the complexity of individual tasks, another important advantage of our method is that it allows to do learning end-to-end without relying on complex nested gradients optimization and other meta-learning approaches, where the number of unrolls steps is large.

The paper is structured as follows. In Section 2, we discuss the few-shot learning problem setup and highlight related work. Section 3 introduces our approach, discusses the motivation for choosing an attention-based model and shows how our approach can be used to meta-learn semi-supervised learning algorithms. In Section 4, we discuss our experimental results. Finally, in Section 5, we provide concluding remarks.

2 Problem Setup and Related Work

2.1 Few-Shot Learning

The main goal of a *few-shot learning algorithm* is to use a set of training tasks $\mathcal{T}_{\text{train}}$ for finding a *learner* $a_{\boldsymbol{\phi}}$ parameterized by $\boldsymbol{\phi}$ that given new task domains can train to recognize novel classes using just a few samples per each class. The learner $a_{\boldsymbol{\phi}}$ can be thought of as a function that maps task description $T = \{(x_i, c_i)\}_{i=1}^{t}$ containing k labeled input samples $\{x_i, c_i\}$ from n classes, to the weights $\boldsymbol{\theta} = a_{\boldsymbol{\phi}}(T)$ of a trained model $f(x; \boldsymbol{\theta})$. The parameters $\boldsymbol{\phi}$ are meta-optimized to maximize the performance of the model $f(x; a_{\boldsymbol{\phi}}(T_S))$ generated using a support set T_S with x drawn from a query set T_Q. Each task $T = (T_S, T_Q)$ is randomly drawn from a space of training tasks $\mathcal{T}_{\text{train}}$. Typically, T_S and T_Q are generated by first randomly choosing several distinct classes from the training set and then sampling examples without replacement from these classes to generate T_S and T_Q. In a classical "n-way-k-shot" setting, n is the number of classes randomly sampled in each episode, and k is the number of samples for each class in the support set T_S.

The quality of a particular few-shot learning algorithm is typically evaluated using a separate test space of tasks $\mathcal{T}_{\text{test}}$. By forming $\mathcal{T}_{\text{test}}$ from novel classes unseen at training time, we can evaluate generalization of different learners $a_{\boldsymbol{\phi}}$. Best algorithms are expected to capture the structure present in the training set and to perform well on novel concepts. This structure may, for example, include certain properties of the distributions $p_c(x)$ with c being the class label, or the presence of particular discriminative (or alternatively invariant) features in the tasks from $\mathcal{T}_{\text{train}}$.

2.2 RELATED WORK

Few-shot learning received a lot of attention from the deep learning community and while there are hundreds of few-shot learning methods, several common themes emerged in the past years. Here we outline several existing approaches, show how they relate to our method and discuss the prior work related to it.

Metric-Based Learning. One family of approaches involves mapping input samples into a lower-dimensional embedding space and then using some nearest neighbor algorithm that relies on the computation of distances from a query sample embedding to the embedding computed using support samples with known labels. The metric used to compute the distance can either be the same for all tasks, or can be task-dependent. This family of methods includes, for example, such methods as Siamese networks (Koch et al., 2015), Matching Networks (Vinyals et al., 2016), Prototypical Networks (Snell et al., 2017), Relation Networks (Sung et al., 2018) and TADAM (Oreshkin et al., 2018). It has recently been argued (Tian et al., 2020) that methods based on building a powerful sample representation can frequently outperform numerous other approaches including many optimization-based methods. However, such approaches essentially amount to "one-model solves all" approach and thus require larger models than needed to solve individual tasks.

Optimization-Based Learning. An alternative approach that can adapt the embedding to a new task is to incorporate optimization within the learning process. A variety of such methods are based on the approach called *Model-Agnostic Meta-Learning*, or MAML (Finn et al., 2017). In MAML, $\boldsymbol{\theta} = a_{\boldsymbol{\phi}}$ is obtained by initializing a DNN at $\boldsymbol{\theta}_0 = \boldsymbol{\phi}$ and then performing one or more gradient descent updates on a classification loss function L, i.e., computing $\boldsymbol{\theta}_{k+1} = \boldsymbol{\theta}_k - \gamma \cdot (\partial L / \partial \boldsymbol{\theta})(T; \boldsymbol{\theta}_k)$. This approach was later refined (Antoniou et al., 2019) and built upon giving rise to Reptile (Nichol et al., 2018), LEO (Rusu et al., 2019) and others. One limitation of various MAML-inspired methods is that the knowledge about the set of training tasks $\mathcal{T}_{\text{train}}$ is distilled into parameters $\boldsymbol{\phi}$ that have the same dimensionality as the model parameters $\boldsymbol{\theta}$. Therefore, for very lightweight model $f(x; \boldsymbol{\theta})$ the capacity of the task-adaptation learner $a_{\boldsymbol{\phi}}$ is still limited by the size of $\boldsymbol{\theta}$. Methods that use parameterized preconditioners that otherwise do not impact the model $f(x; \boldsymbol{\theta})$ can alleviate this issue, but as with MAML, such methods can be difficult to train (Antoniou et al., 2019).

Weight Modulation and Generation. The idea of using a task specification to directly generate or modulate model weights has been previously explored in the generalized supervised learning context (Ratzlaff & Li, 2019) and in specific language models (Mahabadi et al., 2021; Tay et al., 2021; Ye & Ren, 2021). Some of the few-shot learning methods described above also employ this approach and use task-specific generation or modulation of the weights of the final classification model. For example, in LGM-Net (Li et al., 2019b) the matching network approach is used to generate a few layers on top of a task-agnostic embedding. Another approach abbreviated as LEO (Rusu et al., 2019) utilized similar weight generation method to generate initial model weights from the training dataset in a few-shot learning setting, much like what is proposed in this article. However, in (Rusu et al., 2019), the generated weights were also refined using several SGD steps similar to how it is done in MAML. Here we explore a similar idea, but largely inspired by the HYPERNETWORK approach (Ha et al., 2017), we instead propose to directly generate an entire task-specific CNN model. Unlike LEO, we do not rely on pre-computed embeddings for images and generate the model in a single step without additional SGD steps, which simplifies and stabilizes training.

Transformers in Computer Vision and Few-Shot Learning. Transformer models (Vaswani et al., 2017) originally proposed for natural language understanding applications had since became a useful tool in practically every subfield of deep learning. In computer vision, transformers have recently seen an explosion of applications ranging from state-of-the-art image classification results (Dosovitskiy et al., 2021; Touvron et al., 2021) to object detection (Carion et al., 2020; Zhu et al., 2021), segmentation (Ye et al., 2019), image super-resolution (Yang et al., 2020), image generation (Chen et al., 2021) and many others. There are also several notable applications in few-shot image classification. For example, in Liu et al. (2021), the transformer model was used for generating universal representations in the multi-domain few-shot learning scenario. And closely related to our approach, in Ye et al. (2020), the authors proposed to accomplish embedding adaptation with the help of transformer models. Unlike our method that generates an entire end-to-end image classification model, this approach applied a task-dependent perturbation to an embedding generated

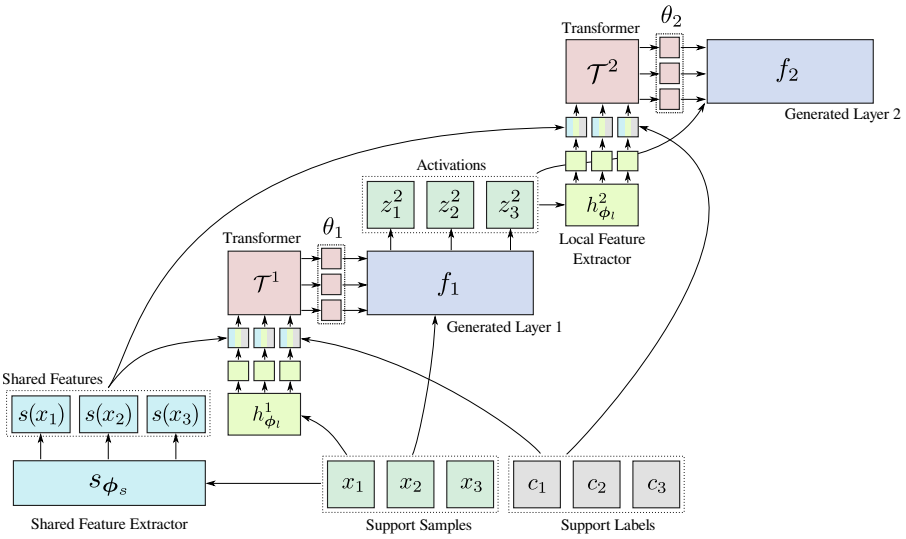

Figure 1: A diagram of our model showing generation of two CNN layers: transformer-based weight generators receive global and local features along with sample labels as their inputs and produce CNN layer weights (θ_1 and θ_2). After being generated, the CNN model is used to compute the loss on the query set. The gradients of this loss are then used to adjust the weights of the entire weight generation model.

by an independent task-agnostic feature extractor. In (Gidaris & Komodakis, 2018), a simplified attention-based model was used for the final layer generation.

3 Our Approach

In this section we describe a our approach to few-shot learning that we call a HyperTransformer (HT) and justify the choice of self-attention mechanism as its basis.

3.1 Few-Shot Learning Model

A learner $a_{\boldsymbol{\phi}}$ (as introduced in Section 2.1) is the core of a few-shot learning algorithm and in this paper, we choose $a_{\boldsymbol{\phi}}$ to be a transformer-based model that takes a task description $T = \{(x_i, c_i)\}_{i=1}^t$ as input and produces weights for some or all layers $\{\theta_\ell | \ell = 1, \dots, L\}$ of the generated CNN model. For layers with non-generated weights, they are learned in the end-to-end fashion as ordinary task-agnostic variables. In our experiments generated CNN models contain a set of convolutional layers and a final fully-connected logits layer. Here θ_ℓ are the parameters of the ℓ-th layer and L is the total number of layers including the final logits layer (with index L). The weights are generated layer by layer starting from the first layer: $\theta_1(T) \to \theta_2(\theta_1; T) \to \cdots \to \theta_L(\theta_{1,\dots,L-1}; T)$. Here we use $\theta_{a,\dots,b}$ as a short notation for $(\theta_a, \theta_{a+1}, \dots, \theta_b)$.

Shared and local features. The *local* features at layer ℓ are produced by a convolutional *feature extractor* $h^\ell_{\boldsymbol{\phi}_l}(z_i^\ell)$ applied to the activations of the previous layer $z_i^\ell := f_{\ell-1}(x_i; \theta_{1,\dots,\ell-1})$ for $\ell > 1$ and $z_i^1 := x_i$. In other words, the transformer for layer ℓ receives

$$\mathcal{I}^\ell := \left\{ \left(\; s_{\boldsymbol{\phi}_s}(x_i), \; h^\ell_{\boldsymbol{\phi}_l}(f_{\ell-1}(x_i, \theta_{1,\dots,\ell-1})), \; c_i \; \right) \right\}_{i=1,\dots,n}.$$

The intuition behind the local feature extractor is that the choice of the layer weights should primarily depend on the inputs received by this layer. The *shared* features, on the other hand, are the same for all layers and are produced by a separate trainable convolutional neural network $s_{\boldsymbol{\phi}_s}(x_i)$. Their purpose is to modulate each layer's weight generator with a global high-level sample embedding that, unlike the local embedding, is independent of the generated weights and is also fully shared between all layer generators.

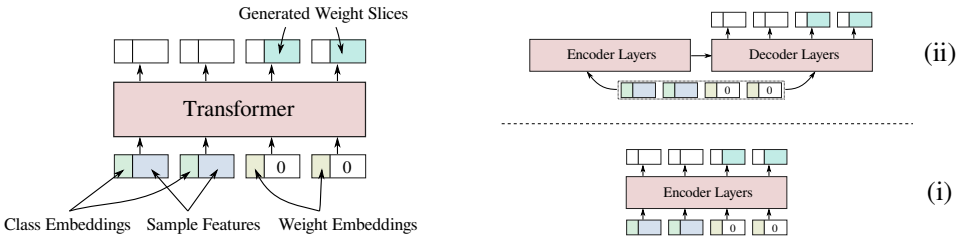

Figure 2: (a) Structure of the tokens passed to and received from a transformer model; (b) 3 designs of the transformer model: (i) only encoder layers; (ii) encoder and decoder layers on the same input sequence.

Encoding and decoding transformer inputs and outputs. In our experiments we considered several different architectures of the transformer model, different ways of feeding $\mathcal{I}^\ell$ into it and different ways of converting transformer outputs into the CNN weights.

Input samples were encoded by concatenating local and shared features from $\mathcal{I}^\ell$ to placeholder label embeddings $\xi(c)$ with $\xi : [1, n] \rightarrow \mathbb{R}^d$. Here n is the number of classes per episode and d is a chosen size of the label encoding. Note that the label embedding do not contain semantic information, but rather act as placeholder to differentiate different labels.

Along with input samples, the transformer is also fed placeholder tokens for different slices of the weight tensors that the model needs to generate. Each placeholder is a learnable token representing a slice of the weight tensor[1]. We used zero padding to make the final input sample and weight slice tokens to have the same dimensions. After each weight placeholder was processed by the transformer, we read out the corresponding model outputs and assemble output weights (with first d dimensions ignored) into the final weight tensors. In our experiments we also considered two different ways of encoding $k \times k \times n_{\text{input}} \times n_{\text{output}}$ convolutional kernels: (a) generating n_{output} weight slices with each output token having a dimension of $k^2 \times n_{\text{input}}$ (we call it "output allocation"), (b) k^2 weight slices of size $n_{\text{input}} \times n_{\text{output}}$ ("spatial allocation"). We show these results in Supplementary Materials.

Transformer model. The input discussed above was passed through a sequence of transformer encoder layers and the output weight tokens were then concatenated into a full weight tensor (see Fig. 2a). In one version of our model, we only used encoder layers, while in the other version we used both encoder and decoder on the same sequence of input tokens (see Fig. 2b). We compare these models in Supplementary Materials.

Training the model. The weight generation model uses the support set to produce the weights of some or all CNN model layers. This generated CNN model then processes the query set samples and the cross-entropy classification loss is computed. The weight generation parameters $\boldsymbol{\phi}$ are then learned by optimizing this loss function using stochastic gradient descent.

3.2 Reasoning Behind the Self-Attention Mechanism

The choice of self-attention mechanism for the weight generator is not arbitrary. One motivating reason behind this choice is that the output produced by generator with self-attention is by design invariant to input permutations, i.e., permutations of samples in the training dataset. This also makes it suitable for processing unbalanced batches and batches with a variable number of samples (see Sec. 4.3). Now we show that self-attention can express several intuitive algorithms, thus further motivating its utility.

[1] with the size identical to the size of concatenated local and shared features

Supervised learning. Self-attention in its rudimentary form can implement a method similar to cosine-similarity-based sample weighting encoded in the logits layer[2] with weights $\boldsymbol{W}$:

$$W_{ij} \sim \sum_{m=1}^{n} y_i^{(m)} e_j^{(m)}, \tag{1}$$

which can also be viewed as a result of applying a single gradient descent step on the cross-entropy loss (see Appendix A). Here n is the total number of support-set samples $\{x^{(m)} | m = 1, \ldots, n\}$ and $\boldsymbol{e}^{(m)}$, $\boldsymbol{y}^{(m)}$ are the embedding vector and the one-hot label corresponding to $x^{(m)}$.

The approach can be outlined (see more details in Appendix A) as follows. The self-attention operation receives encoded input samples $\mathcal{I}_k = (\xi(c_k), \boldsymbol{e}_k)$ and weight placeholders $(\mu(i), 0)$ as its input. If each weight slice $W_{i,\cdot}$ represented by a particular token $(\mu(i), 0)$ produces a *query* Q_i that only attends to *keys* K_k corresponding to samples $\mathcal{I}_k$ with labels c_k matching i and the *values* of these samples are set to their embeddings $\boldsymbol{e}_k$, then the self-attention operation will essentially average the embeddings of all samples assigned label i thus matching the first term in $\boldsymbol{W}$ in equation 1.

Semi-supervised learning. A similar self-attention mechanism can also be designed to produce logits layer weights when the support set contains some unlabeled samples. The mechanism first propagates classes of labeled samples to similar unlabeled samples. This can be achieved by choosing the queries and the keys of the samples to be proportional to their embeddings. The attention map for sample i would then be defined by a softmax of $\boldsymbol{e}_i \cdot \boldsymbol{e}_j$, or in other words would be proportional to $\exp(\boldsymbol{e}_i \cdot \boldsymbol{e}_j)$. Choosing sample values to be proportional to the class tokens, we can then propagate a class of a labeled sample $\boldsymbol{e}_j$ to a nearby unlabeled sample with embedding $\boldsymbol{e}_i$, for which $\boldsymbol{e}_i \cdot \boldsymbol{e}_j$ is sufficiently large. If the self-attention module is "residual", i.e., the output of the self-attention operation is added to the original input, like it is done in the transformer model, then this additive update would essentially "mark" an unlabeled sample by the propagated class (albeit this term might have a small norm). The second self-attention layer can then be designed similarly to the supervised case. If label embeddings are orthogonal, then even a small component of a class label can be sufficient for a weight slice to attend to it thus adding its embedding to the final weight.

4 EXPERIMENTS

In this section, we present HYPERTRANSFORMER (HT) experimental results and discuss the implications of our empirical findings.

4.1 DATASETS AND SETUP

Datasets. For our experiments, we chose several most widely used few-shot datasets including OMNIGLOT, MINIIMAGENET and TIEREDIMAGENET. MINIIMAGENET contains a relatively small set of labels and is arguably the simplest to overfit to. Because of this and since in many recent publications MINIIMAGENET was replaced with a more realistic TIEREDIMAGENET datasets, we conduct many of our experiments and ablation studies using OMNIGLOT and TIEREDIMAGENET datasets.

Models. While HT can support generation of arbitrarily large weight tensors by flattening and slicing the entire weight tensor, in this work, we limit our experiments to HT models that generate slices encoding individual output channels directly. For the target models we focus on 4-layer architectures identical to those used in MAML++ and numerous other papers. Generating larger architectures such as RESNET and WIDERESNET will be the subject of our future work. More specifically, we used a sequence of four 3×3 convolutional layers with the same number of output channels followed by batch normalization layers, nonlinearities and max-pooling stride-2 layers. All BN variables were learned and not generated[3].

Table 1: Comparison of HT with MAML++ on models of different sizes and different datasets: (a) 20-way OMNIGLOT; (b) 5-way MINIIMAGENET; (c) 5-way TIEREDIMAGENET. Results for MAML++ were obtained using GitHub code accompanying Antoniou et al. (2019), those marked with † are from Antoniou et al. (2019) and ⋆ are from Tian et al. (2020). HT outperforms MAML++ on many few-shot tasks. Accuracy confidence intervals: OMNIGLOT – between 0.1% and 0.3%, MINIIMAGENET – between 0.2% and 0.5%, TIEREDIMAGENET – between 0.2% and 0.5%.

Approach	*1-shot (channels)*					*5-shot (channels)*				
	8	16	32	48	64	8	16	32	48	64
OMNIGLOT:										
- MAML++	81.4	88.6	**95.6**	**95.8**	**97.7**†	83.2	94.9	**98.6**	**98.8**	**99.3**†
- HT	**87.2**	**93.7**	**95.5**	**95.7**	96.2	**94.7**	**98.0**	**98.6**	**98.8**	98.8
MINI:										
- MAML++	43.9	46.6	49.4	52.2†	–	**59.0**	**64.6**	66.8	**68.3**†	–
- HT	**45.5**	**50.2**	**53.8**	**55.1**	–	58.5	63.8	**67.1**	**68.1**	–
TIER:										
- MAML	–	–	51.7⋆	–	–	–	–	**70.3**⋆	–	–
- PROTONET	–	–	–	–	53.3⋆	–	–	–	–	72.7⋆
- HT	–	–	**52.7**	54.8	**56.1**	–	–	69.7	71.9	**73.3**

4.2 SUPERVISED RESULTS WITH LOGITS LAYER GENERATION

Our first experiments compared the proposed HT approach with MAML++ on OMNIGLOT, MINIIMAGENET and TIEREDIMAGENET datasets (see Table 1). Interestingly, for models that had more than 8 channels per layer, the results obtained with HT generating the final logits layer proved to be nearly identical to those where HT was used to generate all CNN layers (see Section 4.4). In our experiments the number of *local features* was chosen to be the same as the number of model channels and the shared feature had a dimension of 32 regardless of the model size. The shared feature extractor was a simple 4-layer convolutional model with batch normalization and stride-2 3×3 convolutional kernels. Local feature extractors were two-layer convolutional models with outputs of both layers averaged over the spatial dimensions and concatenated to produce the final local feature. For all tasks except 5-shot MINIIMAGENET our transformer had 3 layers, used a simple sequence of encoder layers (Figure 2b-i) and used the "output allocation" of weight slices (Section 3.1). Experiments with the encoder-decoder transformer architecture can be found in Appendix C. The 5-shot MINIIMAGENET results presented in Table 1 were obtained with a simplified transformer model that had 1 layer, and did not have the final fully-connected layer and nonlinearity. This proved necessary for reducing model overfitting of this smaller dataset. Other model parameters are described in detail in Appendix B.

Results obtained with our method in a few-shot setting (see Table 1) are frequently better than MAML++ and PROTONET results and are comparable to those obtained with much more advanced methods (see Table 2). The improved performance on smaller models can probably be attributed to parameter disentanglement between the weight generator and the CNN model. While the learned HT model could perform a relatively simple calculation on high-dimensional sample features, perhaps not too different from that in equation 1, our brief analysis of the parameters space (see Appendix C) shows that using simpler 1-layer transformers leads to a modest decrease of the test accuracy and a greater drop in the training accuracy for smaller models. We observed that the results in Table 1 could be improved even further by increasing the feature sizes (see Appendix C), but we did not pursue an exhaustive optimization in the parameter space.

It is worth noting that overfitting leading to a good performance on tasks composed of seen categories, but poor generalization to unseen categories, may still have practical applications. Specifically, if the actual task relies on classes seen at the training time, we can generate a model customized to a particular task in a single pass without having to perform any SGD steps to fine-tune the model. This is useful if, for example, the client model needs to be adjusted to a particular set of known classes most widely used by this client. We also anticipate that with more complex data augmen-

[2]here we assume that the embeddings $\boldsymbol{e}$ are unbiased, i.e., $\langle e_i \rangle = 0$

[3]Experiments with generated BN variables did not show much difference with this simpler approach.

tations and additional synthetic tasks, more complex transformer-based models can further improve their performance on the test set and a deeper analysis of such techniques will be the subject of our future work.

Table 2: Comparison of MINIIMAGENET 1-shot-5-way results for HT and different other widely known methods on a 64-64-64-64 model including (Tian et al., 2020): Matching Networks (Vinyals et al., 2016), IMP (Allen et al., 2019), Prototypical Networks (Snell et al., 2017), TAML (Jamal & Qi, 2019), SAML (Hao et al., 2019), GCR (Li et al., 2019a), KTN(Visual) (Peng et al., 2019), and PARN (Wu et al., 2019).

Approach	HT (our)	MN	IMP	PN	TAML	SAML	GCR	KTN	PARN
Accuracy	54.1	43.6	49.2	49.4	51.8	52.2	53.2	**54.6**	**55.2**

4.3 SEMI-SUPERVISED RESULTS WITH LOGITS LAYER GENERATION

In our approach, the weight generation model is trained by optimizing the loss calculated on the query set and therefore any additional information about the task, including unlabeled samples, can be provided as a part of the support set to the weight generator without having to alter the optimization objective. This allows us to tackle a semi-supervised few-shot learning problem without making any substantial changes to the model or the training approach. In our implementation, we simply added unlabeled samples into the support set and marked them with an auxiliary learned "unlabeled" token $\hat{\xi}$ in place of the label encoding $\xi(c)$.

Since OMNIGLOT is typically characterized by very high accuracies in the $97\% - 99\%$ range, we conducted all our experiments with TIEREDIMAGENET. Results of our experiments presented in Table 3 show that adding unlabeled samples leads to a substantial increase of the final test accuracy. Furthermore, notice that the model achieves its best performance when the number of transformer layers is greater than one. This is consistent with the basic mechanism discussed in Section 3.2 and requiring two self-attention layers to function.

It is worth noticing that adding more unlabeled samples into the support set makes our model more difficult to train and it gets stuck producing CNNs with essentially random outputs. Our solution was to introduce unlabeled samples incrementally during training. This was implemented by masking out some unlabeled samples in the beginning of the training and then slowly reducing the masking probability over time.

4.4 GENERATING MORE MODEL LAYERS

We demonstrated that HT model can outperform MAML++ on common few-shot learning datasets by generating just the last logits layer of the CNN model. But under what conditions can it be advantageous to generate additional CNN layers? As we show here, generating all CNN layers with a multi-layer transformer can lead to a significant performance improvement on CNN models below a particular size.

We demonstrated this by conducting experiments, in which some of the layers were generated and some layers were learned (usually first few layers of the CNN). For OMNIGLOT dataset, we saw that both training and test accuracies for a 4-channel and 6-channel CNNs increased with the number of generated layers (see Fig. 3 and Table 4 in Appendix) and using more complex transformer models

Table 3: Test accuracy on TIEREDIMAGENET of supervised 1-shot and 5-shot models and semi-supervised 1-shot models with u additional unlabeled samples per class. The weight generation transformer model uses L_T encoder layers. Notice a performance improvement of semi-supervised learning over the 1-shot supervised results. Accuracy is seen to grow with the number of unlabeled samples and the maximum accuracy is reached when the encoder has at least two layers.

(u, L_T)	*1-shot*	*5-shot*	$(2,3)$	$(4,1)$	$(4,2)$	$(4,3)$	$(9,3)$
Accuracy	56.0	69.9	58.3	56.6	59.9	59.9	61.5

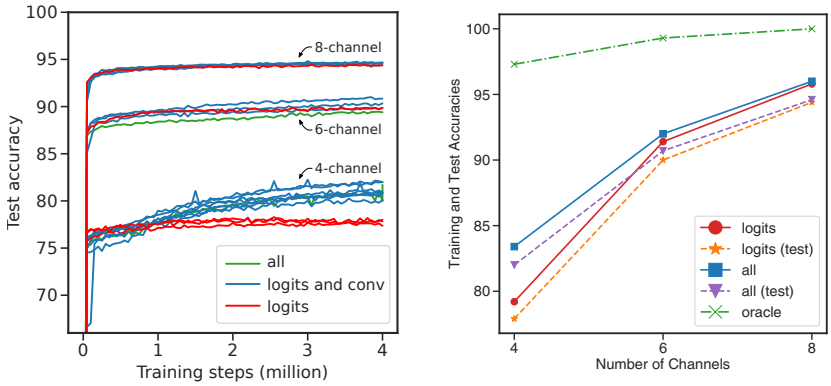

Figure 3: (**Left**) Test accuracies for the generated 4-channel, 6-channel and 8-channel CNN models on the 5-shot-20-way OMNIGLOT task. Models with only the last logits layer generated (*red*) are characterized by the lower test accuracies compared to the models with some or all convolutional layers also being generated (*blue*, *green*). Similar plot for TIEREDIMAGENET can be found in Appendix (Fig. 12). (**Right**) 5-shot-20-way OMNIGLOT training/test accuracies as a function of the CNN model complexity: model with only the final logits layer being generated (*logits*), model with all layers being generated (*all*), training the model on all available samples for a random set of few classes (*oracle*). A model that generates CNN weights by memorizing all samples (being able to determine their classes) and also memorizing optimal trained weights for any selection of classes would reach the "trained" curve accuracy, but would not generalize.

with 2 or more encoder layers improved both training and test accuracies of fully-generated CNN models of this size (see Appendix C). However, as the size of the model increased and reached 8 channels, generating the last logits layer alone proved to be sufficient for getting the best results on OMNIGLOT and TIEREDIMAGENET.

The positive effect of generating convolutional layers can also be observed in shallow models with large convolutional kernels with large strides where the model performance can be much more sensitive to a proper choice of model weights. For example, in a 16-channel model with two convolutional kernels of size 9 and the stride of 4, the overall test accuracy for a model generating only the final convolutional layer was about 1% lower than the accuracies of the models generating at least one additional convolutional filter. We also speculate, that as the complexity of the task increases, generating some or all intermediate network layers should become more important for achieving optimal performance. Verifying this hypothesis and understanding the "boundary" in the model space between two regimes where a static backbone is sufficient, or no longer sufficient will be the subject of our future work.

5 CONCLUSIONS

In this work, we proposed *a HyperTransformer* (HT), a novel transformer-based model that generates all weights of a CNN model directly from a few-shot support set. This approach allows to use a high-capacity model for encoding task-dependent variations in the weights of a smaller model. We demonstrate that generating the last logits layer alone, the transformer-based weight generator beats or matches performance of multiple traditional learning methods on several few-shot benchmarks. More importantly, we showed that HT can be straightforwardly extended to handle unlabeled samples that might be present in the support set and our experiments demonstrate a considerable few-shot performance improvement in the presence of unlabeled data. Finally, we explore the impact of the transformer-encoded model diversity in CNN models of different sizes. We use HT to generate some or all convolutional kernels and biases and show that for sufficiently small models, adjusting all model parameters further improves their few-shot learning performance.

REFERENCES

Kelsey R. Allen, Evan Shelhamer, Hanul Shin, and Joshua B. Tenenbaum. Infinite mixture prototypes for few-shot learning. In Kamalika Chaudhuri and Ruslan Salakhutdinov (eds.), *Proceedings of the 36th International Conference on Machine Learning, ICML 2019, 9-15 June 2019, Long Beach, California, USA*, volume 97 of *Proceedings of Machine Learning Research*, pp. 232–241. PMLR, 2019.

Antreas Antoniou, Harrison Edwards, and Amos J. Storkey. How to train your MAML. In *7th International Conference on Learning Representations, ICLR 2019, New Orleans, LA, USA, May 6-9, 2019*. OpenReview.net, 2019.

Nicolas Carion, Francisco Massa, Gabriel Synnaeve, Nicolas Usunier, Alexander Kirillov, and Sergey Zagoruyko. End-to-end object detection with transformers. In Andrea Vedaldi, Horst Bischof, Thomas Brox, and Jan-Michael Frahm (eds.), *Computer Vision - ECCV 2020 - 16th European Conference, Glasgow, UK, August 23-28, 2020, Proceedings, Part I*, volume 12346 of *Lecture Notes in Computer Science*, pp. 213–229. Springer, 2020. URL https://doi.org/10.1007/978-3-030-58452-8_13.

Hanting Chen, Yunhe Wang, Tianyu Guo, Chang Xu, Yiping Deng, Zhenhua Liu, Siwei Ma, Chunjing Xu, Chao Xu, and Wen Gao. Pre-trained image processing transformer. In *IEEE Conference on Computer Vision and Pattern Recognition, CVPR 2021, virtual, June 19-25, 2021*, pp. 12299–12310. Computer Vision Foundation / IEEE, 2021.

Alexey Dosovitskiy, Lucas Beyer, Alexander Kolesnikov, Dirk Weissenborn, Xiaohua Zhai, Thomas Unterthiner, Mostafa Dehghani, Matthias Minderer, Georg Heigold, Sylvain Gelly, Jakob Uszkoreit, and Neil Houlsby. An image is worth 16x16 words: Transformers for image recognition at scale. In *9th International Conference on Learning Representations, ICLR 2021, Virtual Event, Austria, May 3-7, 2021*, 2021.

Chelsea Finn, Pieter Abbeel, and Sergey Levine. Model-agnostic meta-learning for fast adaptation of deep networks. In Doina Precup and Yee Whye Teh (eds.), *Proceedings of the 34th International Conference on Machine Learning*, volume 70 of *Proceedings of Machine Learning Research*, pp. 1126–1135. PMLR, 06–11 Aug 2017.

Spyros Gidaris and Nikos Komodakis. Dynamic few-shot visual learning without forgetting. In *2018 IEEE Conference on Computer Vision and Pattern Recognition, CVPR 2018, Salt Lake City, UT, USA, June 18-22, 2018*, pp. 4367–4375. IEEE Computer Society, 2018. doi: 10.1109/CVPR.2018.00459.

David Ha, Andrew M. Dai, and Quoc V. Le. HyperNetworks. In *5th International Conference on Learning Representations, ICLR 2017, Toulon, France, April 24-26, 2017, Conference Track Proceedings*, 2017.

Fusheng Hao, Fengxiang He, Jun Cheng, Lei Wang, Jianzhong Cao, and Dacheng Tao. Collect and select: Semantic alignment metric learning for few-shot learning. In *2019 IEEE/CVF International Conference on Computer Vision, ICCV 2019, Seoul, Korea (South), October 27 - November 2, 2019*, pp. 8459–8468. IEEE, 2019. doi: 10.1109/ICCV.2019.00855.

Muhammad Abdullah Jamal and Guo-Jun Qi. Task agnostic meta-learning for few-shot learning. In *IEEE Conference on Computer Vision and Pattern Recognition, CVPR 2019, Long Beach, CA, USA, June 16-20, 2019*, pp. 11719–11727. Computer Vision Foundation / IEEE, 2019. doi: 10.1109/CVPR.2019.01199.

Gregory Koch, Richard Zemel, Ruslan Salakhutdinov, et al. Siamese neural networks for one-shot image recognition. In *ICML deep learning workshop*, volume 2. Lille, 2015.

Aoxue Li, Tiange Luo, Tao Xiang, Weiran Huang, and Liwei Wang. Few-shot learning with global class representations. In *2019 IEEE/CVF International Conference on Computer Vision, ICCV 2019, Seoul, Korea (South), October 27 - November 2, 2019*, pp. 9714–9723. IEEE, 2019a. doi: 10.1109/ICCV.2019.00981.

Huai-Yu Li, Weiming Dong, Xing Mei, Chongyang Ma, Feiyue Huang, and Bao-Gang Hu. Lgm-net: Learning to generate matching networks for few-shot learning. In Kamalika Chaudhuri and Ruslan Salakhutdinov (eds.), *Proceedings of the 36th International Conference on Machine Learning, ICML 2019, 9-15 June 2019, Long Beach, California, USA*, volume 97 of *Proceedings of Machine Learning Research*, pp. 3825–3834. PMLR, 2019b.

Lu Liu, William L. Hamilton, Guodong Long, Jing Jiang, and Hugo Larochelle. A universal representation transformer layer for few-shot image classification. In *9th International Conference on Learning Representations, ICLR 2021, Virtual Event, Austria, May 3-7, 2021*. OpenReview.net, 2021.

Rabeeh Karimi Mahabadi, Sebastian Ruder, Mostafa Dehghani, and James Henderson. Parameter-efficient multi-task fine-tuning for transformers via shared hypernetworks. In Chengqing Zong, Fei Xia, Wenjie Li, and Roberto Navigli (eds.), *Proceedings of the 59th Annual Meeting of the Association for Computational Linguistics and the 11th International Joint Conference on Natural Language Processing, ACL/IJCNLP 2021, (Volume 1: Long Papers), Virtual Event, August 1-6, 2021*, pp. 565–576. Association for Computational Linguistics, 2021. doi: 10.18653/v1/2021.acl-long.47.

Alex Nichol, Joshua Achiam, and John Schulman. On first-order meta-learning algorithms. *CoRR*, abs/1803.02999, 2018.

Boris N. Oreshkin, Pau Rodríguez López, and Alexandre Lacoste. TADAM: task dependent adaptive metric for improved few-shot learning. In Samy Bengio, Hanna M. Wallach, Hugo Larochelle, Kristen Grauman, Nicolò Cesa-Bianchi, and Roman Garnett (eds.), *Advances in Neural Information Processing Systems 31: Annual Conference on Neural Information Processing Systems 2018, NeurIPS 2018, December 3-8, 2018, Montréal, Canada*, pp. 719–729, 2018.

Zhimao Peng, Zechao Li, Junge Zhang, Yan Li, Guo-Jun Qi, and Jinhui Tang. Few-shot image recognition with knowledge transfer. In *2019 IEEE/CVF International Conference on Computer Vision, ICCV 2019, Seoul, Korea (South), October 27 - November 2, 2019*, pp. 441–449. IEEE, 2019. doi: 10.1109/ICCV.2019.00053.

Neale Ratzlaff and Fuxin Li. Hypergan: A generative model for diverse, performant neural networks. In Kamalika Chaudhuri and Ruslan Salakhutdinov (eds.), *Proceedings of the 36th International Conference on Machine Learning, ICML 2019, 9-15 June 2019, Long Beach, California, USA*, volume 97 of *Proceedings of Machine Learning Research*, pp. 5361–5369. PMLR, 2019.

Sachin Ravi and Hugo Larochelle. Optimization as a model for few-shot learning. In *5th International Conference on Learning Representations, ICLR 2017, Toulon, France, April 24-26, 2017, Conference Track Proceedings*. OpenReview.net, 2017.

Andrei A. Rusu, Dushyant Rao, Jakub Sygnowski, Oriol Vinyals, Razvan Pascanu, Simon Osindero, and Raia Hadsell. Meta-learning with latent embedding optimization. In *7th International Conference on Learning Representations, ICLR 2019, New Orleans, LA, USA, May 6-9, 2019*, 2019.

Jake Snell, Kevin Swersky, and Richard S. Zemel. Prototypical networks for few-shot learning. In Isabelle Guyon, Ulrike von Luxburg, Samy Bengio, Hanna M. Wallach, Rob Fergus, S. V. N. Vishwanathan, and Roman Garnett (eds.), *Advances in Neural Information Processing Systems 30: Annual Conference on Neural Information Processing Systems 2017, December 4-9, 2017, Long Beach, CA, USA*, pp. 4077–4087, 2017.

Flood Sung, Yongxin Yang, Li Zhang, Tao Xiang, Philip H. S. Torr, and Timothy M. Hospedales. Learning to compare: Relation network for few-shot learning. In *2018 IEEE Conference on Computer Vision and Pattern Recognition, CVPR 2018, Salt Lake City, UT, USA, June 18-22, 2018*, pp. 1199–1208. IEEE Computer Society, 2018. doi: 10.1109/CVPR.2018.00131.

Yi Tay, Zhe Zhao, Dara Bahri, Donald Metzler, and Da-Cheng Juan. Hypergrid transformers: Towards A single model for multiple tasks. In *9th International Conference on Learning Representations, ICLR 2021, Virtual Event, Austria, May 3-7, 2021*. OpenReview.net, 2021.

Yonglong Tian, Yue Wang, Dilip Krishnan, Joshua B. Tenenbaum, and Phillip Isola. Rethinking few-shot image classification: A good embedding is all you need? In Andrea Vedaldi, Horst Bischof, Thomas Brox, and Jan-Michael Frahm (eds.), *Computer Vision - ECCV 2020 - 16th European Conference, Glasgow, UK, August 23-28, 2020, Proceedings, Part XIV*, volume 12359 of *Lecture Notes in Computer Science*, pp. 266–282. Springer, 2020. doi: 10.1007/978-3-030-58568-6_16.

Hugo Touvron, Matthieu Cord, Matthijs Douze, Francisco Massa, Alexandre Sablayrolles, and Hervé Jégou. Training data-efficient image transformers & distillation through attention. In Marina Meila and Tong Zhang (eds.), *Proceedings of the 38th International Conference on Machine Learning, ICML 2021, 18-24 July 2021, Virtual Event*, volume 139 of *Proceedings of Machine Learning Research*, pp. 10347–10357. PMLR, 2021.

Ashish Vaswani, Noam Shazeer, Niki Parmar, Jakob Uszkoreit, Llion Jones, Aidan N. Gomez, Lukasz Kaiser, and Illia Polosukhin. Attention is all you need. In Isabelle Guyon, Ulrike von Luxburg, Samy Bengio, Hanna M. Wallach, Rob Fergus, S. V. N. Vishwanathan, and Roman Garnett (eds.), *Advances in Neural Information Processing Systems 30: Annual Conference on Neural Information Processing Systems 2017, December 4-9, 2017, Long Beach, CA, USA*, pp. 5998–6008, 2017.

Oriol Vinyals, Charles Blundell, Tim Lillicrap, Koray Kavukcuoglu, and Daan Wierstra. Matching networks for one shot learning. In Daniel D. Lee, Masashi Sugiyama, Ulrike von Luxburg, Isabelle Guyon, and Roman Garnett (eds.), *Advances in Neural Information Processing Systems 29: Annual Conference on Neural Information Processing Systems 2016, December 5-10, 2016, Barcelona, Spain*, pp. 3630–3638, 2016.

Ziyang Wu, Yuwei Li, Lihua Guo, and Kui Jia. PARN: position-aware relation networks for few-shot learning. In *2019 IEEE/CVF International Conference on Computer Vision, ICCV 2019, Seoul, Korea (South), October 27 - November 2, 2019*, pp. 6658–6666. IEEE, 2019. doi: 10.1109/ICCV.2019.00676.

Fuzhi Yang, Huan Yang, Jianlong Fu, Hongtao Lu, and Baining Guo. Learning texture transformer network for image super-resolution. In *2020 IEEE/CVF Conference on Computer Vision and Pattern Recognition, CVPR 2020, Seattle, WA, USA, June 13-19, 2020*, pp. 5790–5799. Computer Vision Foundation / IEEE, 2020. doi: 10.1109/CVPR42600.2020.00583.

Han-Jia Ye, Hexiang Hu, De-Chuan Zhan, and Fei Sha. Few-shot learning via embedding adaptation with set-to-set functions. In *2020 IEEE/CVF Conference on Computer Vision and Pattern Recognition, CVPR 2020, Seattle, WA, USA, June 13-19, 2020*, pp. 8805–8814. IEEE, 2020. doi: 10.1109/CVPR42600.2020.00883.

Linwei Ye, Mrigank Rochan, Zhi Liu, and Yang Wang. Cross-modal self-attention network for referring image segmentation. In *IEEE Conference on Computer Vision and Pattern Recognition, CVPR 2019, Long Beach, CA, USA, June 16-20, 2019*, pp. 10502–10511. Computer Vision Foundation / IEEE, 2019. doi: 10.1109/CVPR.2019.01075.

Qinyuan Ye and Xiang Ren. Learning to generate task-specific adapters from task description. In Chengqing Zong, Fei Xia, Wenjie Li, and Roberto Navigli (eds.), *Proceedings of the 59th Annual Meeting of the Association for Computational Linguistics and the 11th International Joint Conference on Natural Language Processing, ACL/IJCNLP 2021, (Volume 2: Short Papers), Virtual Event, August 1-6, 2021*, pp. 646–653. Association for Computational Linguistics, 2021. doi: 10.18653/v1/2021.acl-short.82.

Dominic Zhao, Johannes von Oswald, Seijin Kobayashi, João Sacramento, and Benjamin F Grewe. Meta-learning via hypernetworks. 2020.

Xizhou Zhu, Weijie Su, Lewei Lu, Bin Li, Xiaogang Wang, and Jifeng Dai. Deformable DETR: deformable transformers for end-to-end object detection. In *9th International Conference on Learning Representations, ICLR 2021, Virtual Event, Austria, May 3-7, 2021*. OpenReview.net, 2021.