Distribution Embedding Networks for Generalization from a Diverse Set of Classification Tasks

Anonymous authors
Paper under double-blind review

Abstract

We propose Distribution Embedding Networks (DEN) for classification with small data. In the same spirit of meta-learning, DEN learns from a diverse set of training tasks with the goal to generalize to unseen target tasks. Unlike existing approaches which require the inputs of training and target tasks to have the same dimensionality with possibly similar distributions, DEN allows training and target tasks to live in heterogeneous input spaces. This is especially useful for tabular-data tasks where labeled data from related tasks are scarce. DEN uses a three-block architecture: a covariate transformation block followed by a distribution embedding block and then a classification block. We provide theoretical insights to show that this architecture allows the embedding and classification blocks to be fixed after pre-training on a diverse set of tasks; only the covariate transformation block with relatively few parameters needs to be fine-tuned for each new task. To facilitate training, we also propose an approach to synthesize binary classification tasks, and demonstrate that DEN outperforms existing methods in a number of synthetic and real tasks in numerical studies.

1 Introduction

While machine learning has made substantial progress in many technological and scientific applications, its success often relies heavily on large-scale data. However, in many real-world problems, it is costly or even impossible to collect large training sets. For example, in online spam detection, at any time, we may only possess dozens of freshly labeled spam results. In health sciences, we may only have clinical outcomes on a few hundred study subjects. Few-shot learning (FSL) has recently been proposed as a new framework to tackle such small data problems. It has now gained huge attention in many applications such as image classification (Koch et al., 2015; Finn et al., 2017), sentence completion (Vinyals et al., 2016; Munkhdalai et al., 2018), and drug discovery (Altae-Tran et al., 2017); see Wang et al. (2020) for a survey.

The core idea behind most of FSL methods is to augment the limited training data with prior knowledge, e.g., images of other classes in image classification or similar molecules' assays in drug discovery. In *meta-learning* based FSL, such prior knowledge is formulated as a set of related training tasks assumed to follow the same task distribution (Finn et al., 2017), with the goal that the trained model could quickly adapt to new tasks. In practice, however, given an arbitrary target task, the degree and nature of the relationship to the available auxiliary training data is often unknown. In this scenario, it is unclear if existing approaches can extract useful information from the training data and improve the performance on the target task. In fact, there is empirical evidence suggesting that learning from unrelated training tasks can lead to negative adaptation (Deleu & Bengio, 2018). In our numerical studies, we also observe similar behavior; existing FSL approaches perform poorly when training tasks are unrelated to the target task.

In this work, we aim to investigate this important but under-studied setting—few-shot meta-learning with possibly unrelated training tasks. We specifically focus on binary and multi-class classification tasks with *tabular* data. Unlike machine learning with image and text inputs, large datasets of related tasks are not available for generic tabular classification.

A key challenge in this setting is that the input, in the form of covariate vectors for training and target tasks, can live in different spaces and follow different distributions with possibly different dimensions. Existing

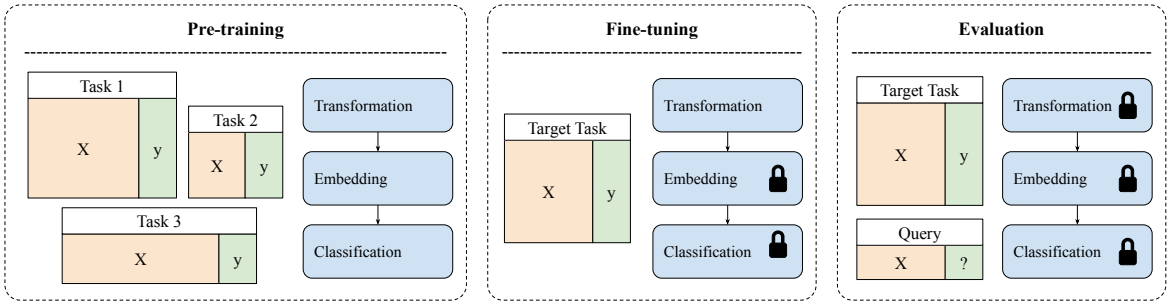

Figure 1: Training and evaluation of DEN. We first pre-train DEN on training tasks with heterogeneous covariate spaces. We then fine-tune the transformation block on a few labeled examples from the target task, and use the fine-tuned model for classification on the query set.

meta-learning techniques often assume a *homogeneous* input space across tasks and thus cannot be directly applied in such cases with *heterogeneous* covariate spaces.

In this work, we propose Distribution Embedding Networks (DEN) for few-shot meta-learning on a diverse set of classification tasks with potentially *heterogeneous* covariate spaces. DEN consists of a novel three-block architecture. It first calibrates the raw covariates via a transformation block. A distribution embedding block is then applied on the transformed covariates to form an embedding vector serving as the "summary" of the target task. Finally, a classification block uses this task embedding vector along with the transformed query features to form a prediction.

Since the tasks can be unrelated, we learn a different transformation block for each task to form task-invariant covariates for the rest of the network. In other words, the transformation block is *task-dependent*. We keep the *task-independent* embedding and classification blocks fixed after *pre-training*, and use a few labeled examples from the target task to *fine-tune* the task-dependent transformation block with only a small number of parameters. To address the challenge of variable-length covariates, the classification block is built upon a Deep Sets architecture (Zaheer et al., 2017). Figure 1 shows an overview of the architecture and training and evaluation mechanisms.

To summarize our main contributions: (I) We propose a method for few-shot meta-learning with possibly unrelated training tasks—an important setting that expands the applications of meta-learning but has rarely been investigated in the literature; (II) We propose the three-block architecture, allowing the model to be pre-trained on a large variety of tasks, and then fine-tuned on an unrelated target task; (III) Described in Section 5, we design a procedure to generate artificial tasks for pre-training, and empirically verify its effectiveness when testing on real tasks. This provides a principled way to generate training tasks and alleviates the cost of collecting real training tasks. (IV) We compare DEN with various existing FSL approaches on both simulated and real tasks, showing improved performance in most of the tasks we consider.

2 Related Work

There are multiple generic techniques applied to the meta-learning problem in the literature (Wang et al., 2020). The first camp learns similarities between pairs of examples (Koch et al., 2015; Vinyals et al., 2016; Bertinetto et al., 2016; Snell et al., 2017; Oreshkin et al., 2018; Wang et al., 2018; Sung et al., 2018; Satorras & Estrach, 2018; Liu et al., 2019; Mishra et al., 2018). For an unlabeled example on a new task, we use its similarity score with labeled examples of the given task for classification. The second camp of optimization-based meta-learning aims to find a good starting point model such that it can quickly adapt to new tasks with a small number of labeled examples from the new task. This camp includes different variants of MAML (Finn et al., 2017; Lee & Choi, 2018; Finn et al., 2018; Grant et al., 2018; Rusu et al., 2019) and Meta-Learner LSTM (Ravi & Larochelle, 2017). The third camp is conceptually similar to topic modeling, such as Neural Statistician (Edwards & Storkey, 2017) and CNP (Garnelo et al., 2018), which learn a task

specific (latent) embedding for classification. The final camp utilizes memory (Santoro et al., 2016; Kaiser et al., 2017; Munkhdalai & Yu, 2017; Munkhdalai et al., 2018). Note that all the above methods assume that all training and target tasks are related and share the same input space.

A closely related problem is Domain Generalization which aims to estimate a functional relationship between the input $\boldsymbol{x}$ and output y given data from different domains (i.e., with different marginal $P(\boldsymbol{x})$); see Wang et al. (2021) and Zhou et al. (2021) for surveys. The core idea lies behind a large class of DG methods is to learn a domain-invariant feature representation (see, e.g., Muandet et al., 2013; Li et al., 2018a;b; Shankar et al., 2018; Shen et al., 2018), which aligns the marginal $P(\boldsymbol{x})$ and/or the conditional $P(y|\boldsymbol{x})$ distributions across multiple domains. In a similar spirit, DEN first adapt to the task via the transformation block and then learns a task-invariant representation via the task-independent embedding block.

Learning from heterogeneous feature spaces has been studied in transfer learning, or domain adaptation (Dai et al., 2008; Yang et al., 2009; Duan et al., 2012; Li et al., 2014; Yan et al., 2017; Zhou et al., 2019); see Day & Khoshgoftaar (2017) for a survey. These approaches only focus on two tasks (source and target), and require the model to learn a transformation mapping to project the source and target tasks into the same space.

Unlike meta-learning and DG methods, DEN is applicable for tasks with *heterogeneous covariates spaces*. This phenomenon is especially prevalent in tabular data tasks, where the number and definition of features could be vastly different across tasks. Iwata & Kumagai (2020) is among the first works that combine meta-learning with heterogeneous covariate spaces. Both their approach and DEN rely on pooling to handle variable length inputs, using building blocks such as Deep Sets (Zaheer et al., 2017) and Set Transformers (Lee et al., 2019). There are several differences between their approach and DEN. Firstly, DEN uses a covariate transformation block, allowing it adapt to new tasks more efficiently. Secondly, their model is permutation invariant in covariates and thus restrictive in model expressiveness; while DEN does not have this restriction. Thirdly, we also provide theoretical insights and justification for our model architecture design.

3 Notations

Let $\mathbb{T}_1, \ldots, \mathbb{T}_M$ be M training tasks. For each training task $\mathbb{T}$, we observe an i.i.d. sample $\mathcal{D}_{\mathbb{T}} = \{(\boldsymbol{x}_{\mathbb{T},i}, y_{\mathbb{T},i})\}_{i\in[n_{\mathbb{T}}]}$ from some joint distribution $P_{\mathbb{T}}$, where $[n] = \{1, \ldots, n\}$ and $\boldsymbol{x}_{\mathbb{T},i} \in \mathbb{R}^{d_{\mathbb{T}}}$ is the covariate vector of the i-th example and $y_{\mathbb{T},i} \in [L_{\mathbb{T}}]$ is its associated label. We denote this sample in matrix form by $(\boldsymbol{X}_{\mathbb{T}}, \boldsymbol{y}_{\mathbb{T}})$, where the j-th column $\boldsymbol{x}^j_{\mathbb{T}} \in \mathbb{R}^{n_{\mathbb{T}}}$ is the j-th covariate vector. We let $\boldsymbol{X}_{\mathbb{T},k}$ be the covariate sub-matrix corresponding to examples with label k for $k \in [L_{\mathbb{T}}]$. When the context is clear, we drop the dependency on $\mathbb{T}$ for simplicity of the notation, e.g., we write $\boldsymbol{X}_{\mathbb{T},k}$ as $\boldsymbol{X}_k$.

Let $\mathbb{S}$ be a target task that is not contained in the training tasks. We are given a set of labeled examples $(\boldsymbol{X}_{\mathbb{S}}, \boldsymbol{y}_{\mathbb{S}})$, where the sample size $n_{\mathbb{S}}$ is small. We refer to it as the *support set*. The goal is to predict labels for unlabeled examples in the target task, which is called the *query set*. We denote $\mathcal{T} = \{\mathbb{T}_1, \ldots, \mathbb{T}_M, \mathbb{S}\}$.

4 Distribution Embedding Networks

We first describe the model architecture of DEN for binary classification in Section 4.1, and then extend DEN for multi-class classification in Section 4.2. Finally, we provide insights into the model architecture and justify its design in Section 4.3.

4.1 Model Architecture for Binary Classification

To describe the model architecture of DEN for binary classification (illustrated in Figure 2), consider data $(\boldsymbol{X}, \boldsymbol{y})$ in a given task $\mathbb{T}$. DEN can be decomposed into three major blocks: transformation, embedding and classification. We will describe these blocks in this section.

Transforming covariates with task-dependent transformation block. We first transform the covariates via a transformation block, i.e.,

$$\boldsymbol{Z} = c(\boldsymbol{X}), \tag{1}$$

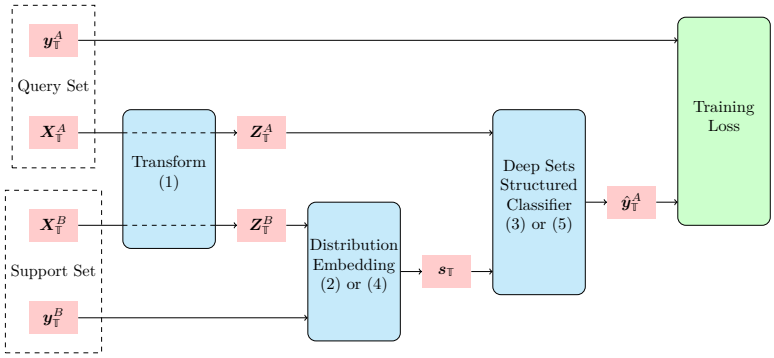

Figure 2: Block diagram of the DEN model for binary classification. During pre-training, for each gradient step we sample task $\mathbb{T}$, query set $(\boldsymbol{X}_{\mathbb{T}}^A, \boldsymbol{y}_{\mathbb{T}}^A)$ and support set $(\boldsymbol{X}_{\mathbb{T}}^B, \boldsymbol{y}_{\mathbb{T}}^B)$. We fine-tune the task-dependent transformation block on the target task $\mathbb{S}$ to get $c_{\mathbb{S}}$.

where $c : \mathbb{R}^d \to \mathbb{R}^d$ is applied to each row. Specifically, we use a piecewise linear function[1] (PLF) for each covariate, i.e., $c(\boldsymbol{x}) = (c^1(x^1), \ldots, c^d(x^d))$. PLFs can be optionally constrained o be monotonic, which would serve as a form of regularization during training (Gupta et al., 2016). Note that the transformation block is task-dependent—its parameters need to be re-trained for each new task. The intuition is that, after applying the corresponding transformation to each task, the relatedness across tasks increases. This is conceptually similar to the idea of Muandet et al. (2013), where they consider the domain generalization problem and directly learn an invariant feature transformation by minimizing the dissimilarity across domains. To the contrary, we incorporate this block into a larger architecture and learn it in an end-to-end fashion.

One may instead consider other architecture than PLFs for the transformation block. We choose PLFs since they can implement compact one-dimensional non-linearities and can thus be fine-tuned with a small support set. Moreover, they are universal approximators in this space: with enough keypoints, they can approximate any one-dimensional bounded continuous functions. In Section 5.3 we show that this PLF transformation is key to ensure good performance when training tasks and target tasks have heterogeneous covariate spaces. PLFs cannot model interactions between covariates, which is a sacrifice we may have to make in light of the small support set. We study in Section 5.3 the trade-offs between the flexibility of PLF and the size of the support set.

Summarizing task statistics with task-independent distribution embedding block. The second block in DEN is to learn a vector that summarizes the task distribution. This is similar to the idea of Garnelo et al. (2018). Specifically, we embed the distribution $P(\boldsymbol{z}, y)$ of a given task into a vector using the transformed features $\boldsymbol{Z}$ in the following way. For all $a, b \in [d]$, we derive a distribution embedding of $P(z^a, z^b, y)$ by

$$\boldsymbol{s}^{a,b} = \left(\overline{h(\boldsymbol{Z}_1^{a,b})}, \overline{h(\boldsymbol{Z}_2^{a,b})}, \overline{\boldsymbol{y}}\right), \tag{2}$$

where h is a vector-valued *trainable* function, and the average is taken with respect to the training batch during training and support set during inference

$$\overline{h(\boldsymbol{Z}_k^{a,b})} = \frac{\sum_{i=1}^n h(z_i^a, z_i^b)\mathbf{1}\{y_i = k\}}{\sum_{i=1}^n \mathbf{1}\{y_i = k\}},$$

and $\overline{\boldsymbol{y}} = \frac{1}{n}\sum_{i=1}^n y_i$. Intuitively, we decompose a variable-length feature vector $\boldsymbol{z}$ into smaller pieces of fixed length 2, and use the h function to learn a pairwise embedding $\boldsymbol{s}^{a,b}$ for each pair of the 2 features a and b. This pairwise decomposition allows us to handle variable-length covariates. Note that the same function h is shared across all tasks, and it can be chosen as a few fully connected layers. The distribution embedding of $P(\boldsymbol{z}, y)$ is thus the set of embeddings of all pairs $\boldsymbol{s} = \left(\boldsymbol{s}^{a,b}\right)_{a,b\in[d]}$.

[1]See Appendix A for the precise definition.

Remark 4.1. The length 2 here is not essential. We can use pieces of length r for any $r \geq 1$, i.e., obtain an embedding $\boldsymbol{s}^{t_1,\ldots,t_r}$ of $P(\boldsymbol{z}^{t_1,\ldots,t_r}, y)$ for all $t_1, \ldots, t_r \in [d]$. The larger r is the more expressive but more expensive the model will be. We refer to r as the *dependency order* . We will experiment with different values of r in Section 5.3.

Prediction with task-independent classification block. Given a query $\boldsymbol{x}$, we first transform it via $\boldsymbol{z} = c(\boldsymbol{x})$, and decompose the transformed features into sets of feature pairs. We then concatenate the feature pairs with the distribution embedding vector of the same pairs $\boldsymbol{s}^{a,b}$ in (2). Finally, we obtain the predicted logit using a Deep Sets architecture (Zaheer et al., 2017):

$$q = \Phi(\boldsymbol{z}, \boldsymbol{s}) = \psi\left(\sum_{a,b\in[d]} \varphi\left(\left[\boldsymbol{z}^{a,b}, \boldsymbol{s}^{a,b}\right]\right)\right), \tag{3}$$

where φ is a vector-valued trainable function and ψ is a real-valued trainable function. Both of the φ and ψ functions are shared across tasks and can be chosen as fully connected layers. The Deep Sets architecture, which aggregates all possible pairs of covariates, is proven to be a universal approximator of set-input functions (Zaheer et al., 2017). We note that one may use other set input architecture to construct the classification block, e.g., Set Transformer (Lee et al., 2019).

4.2 Model Architecture for Multiclass Classification

For multiclass classification tasks, we modify the distribution embedding and classification blocks. Specifically, we modify the distribution embedding in (2) as

$$\boldsymbol{s}^{a,b} = \frac{1}{n}\sum_{i=1}^{n} h\left(\left[z_i^a, z_i^b, \boldsymbol{v}(y_i)\right]\right), \tag{4}$$

where $\boldsymbol{v} : \mathbb{N} \to \mathbb{R}^m$ is a vector-valued, trainable function that is shared across tasks. $\boldsymbol{v}(k)$ is hence a vector encoding of class k, and h is a vector-valued trainable function with input dimension of $m + 2$.

For the classification block, we modify the idea of Matching Net (Vinyals et al., 2016), which is also similar to the modification adopted by Iwata & Kumagai (2020). This modification is suitable for tasks with different numbers of label classes. Let $\tilde{\Phi}$ be Φ in (3) without the last layer, i.e., $\tilde{\Phi}(\boldsymbol{z}, \boldsymbol{s})$ is the penultimate layer embedding of the query set example with PLF-transformed feature $\boldsymbol{z}$. We then obtain its class scores by

$$q_k = \frac{\sum_{i=1}^{n} \tilde{\Phi}(\boldsymbol{z}, \boldsymbol{s})^\top \tilde{\Phi}(\boldsymbol{z}_i, \boldsymbol{s}) \mathbf{1}\{y_i = k\}}{\sum_{i=1}^{n} \mathbf{1}\{y_i = k\}}. \tag{5}$$

Note that i in the above equation is the index of support set examples (n in total). q_k can thus be interpreted as the average dot-product of the penultimate layer embedding of the given query example with the penultimate layer embedding of the support set examples of class k. To obtain class probability, we can use a softmax transformation on q_k's.

4.3 Rationale for the Architectural Design

For further insights into the model architecture, consider the optimal Bayes classifier:

$$P(y = k \mid \boldsymbol{x}) = \frac{P(\boldsymbol{x} \mid y = k)P(y = k)}{\sum_{l=1}^{L} P(\boldsymbol{x} \mid y = l)P(y = l)}. \tag{6}$$

For a given task, if the conditional probability $P(\boldsymbol{x} \mid y = k)$ belongs to the same family of distributions for all $k \in [L]$, i.e., $\boldsymbol{x} \mid y = k \sim \phi(\boldsymbol{x}; \boldsymbol{\theta}_k)$, then the Bayes classifier can be constructed by estimating the parameters $\boldsymbol{\theta}_k$ and $P(y = k)$, and approximating the density ϕ, i.e.,

$$P(y = k \mid \boldsymbol{x}) = \frac{\phi(\boldsymbol{x}; \boldsymbol{\theta}_k)P(y = k)}{\sum_{l=1}^{L} \phi(\boldsymbol{x}; \boldsymbol{\theta}_l)P(y = l)}. \tag{7}$$

If, additionally, $P(\boldsymbol{x} \mid y = k)$ belongs to the same family of distributions for all $k \in [L]$ and also all tasks, then the Bayes classifers for all tasks should have the same functional form; only the parameters $\boldsymbol{\theta}_k$ and $P(y = k)$ differ by task. In this case, we can simply pool the data from all tasks together to estimate $\boldsymbol{\theta}_k$, $P(y = k)$ for each task, and the task-independent function ϕ.

However, the distribution family $\phi(\boldsymbol{x}; \boldsymbol{\theta}_k)$ may vary greatly across tasks. To alleviate the task dependency, we use the three-block archtiecture. The task-dependent transformation block allows the transformed covariates to be in the same distribution family approximately. Then, we utilize the distribution embedding block to estimate the parameters $\boldsymbol{\theta}_k$ and $P(y = k)$. If all transformed covariates belong to the same distribution family, then the function form to estimate the parameters $\boldsymbol{\theta}_k$ and $P(y = k)$ should be identical for all tasks, which justifies our use of a *task-independent* distribution embedding block. Finally, we use the task-independent classification block to approximate the task-independent function ϕ and obtain a score for each label. It is clear that the effectiveness of DEN depends crucially on the ability of the transformation block to align the distribution families of covariates across tasks. We study in Section 5.3 the performance of DEN in relation to the flexibility of PLFs.

Finally, since the covariate dimension can vary across tasks, we decompose the covariate vector into sub-vectors of fixed length r and apply a Deep Sets architecture to these sub-vectors. In fact, Proposition 4.3 shows that if we consider the following family of densities, then the Bayes classifier must be of the form (3).

Definition 4.2. Let $\{f(\cdot; \boldsymbol{\theta}) : \mathbb{R}^r \to \mathbb{R}\}$ be a parametric family of functions (not necessarily densities). For any integer $d \geq r$, we say a function g on $\mathbb{R}^d$ admits an *f-expansion* if it factorizes as $g(\boldsymbol{z}) = \prod_{t_{1:r} \in [d]^r} f(\boldsymbol{z}^{t_{1:r}}; \boldsymbol{\theta}^{t_{1:r}})$, where $\{\boldsymbol{\theta}^{t_{1:r}} \in \mathbb{R}^\tau\}$ is a set of parameters.

For instance, if $\boldsymbol{z}|y = 1 \sim \mathcal{N}_d(\boldsymbol{\mu}, \sigma^2 I_d)$, then the conditional density $p(\boldsymbol{z}|y = 1)$ is proportional to

$$\prod_{a=1}^{d} \frac{1}{\sigma} \exp\left(-\frac{(z^a - \mu^a)^2}{2\sigma^2}\right),$$

which admits an f-expansion with $r = 1$ and $\boldsymbol{\theta}^a = (\mu^a, \sigma)$.

Proposition 4.3. *Let $(\boldsymbol{z}, y)$ be a random vector in $\mathbb{R}^d \times [L]$ following some distribution P. Assume that the conditional density $p(\boldsymbol{z}|y = k)$ admits an f-expansion for some parametric family of functions $\{f(\cdot; \boldsymbol{\theta})\}$ on $\mathbb{R}^r$ with parameters $\{\boldsymbol{\theta}_k^{t_{1:r}}\}$. Then there exist functions ψ and φ such that*

$$P(y = k \mid \boldsymbol{z}) \propto \psi\left(\sum_{t_{1:r} \in [d]^r} \varphi(\boldsymbol{z}^{t_{1:r}}, \boldsymbol{\theta}_k^{t_{1:r}}, \pi_k)\right), \tag{8}$$

where $\boldsymbol{z}^{t_{1:r}} = (z^{t_1}, \ldots, z^{t_r})$, $\pi_k = P(y = k)$, and ψ and φ only depend on f.

The proof is included in Appendix A. Due to Proposition 4.3, if the conditional density $p(\boldsymbol{z}|y = k)$ admits the same f-expansion for all $k \in [L]$ across tasks, then the optimal Bayes classifier has the form in (8) with task-independent functions ψ and φ. This justifies our choice of the distribution embedding in (2) and the Deep Sets structure in (3).

4.4 Training and Inference

Figure 2 shows a high level summary of our three-block model architecture. The overall training and evaluation procedure is summarized in Table 1. The computational complexity and resource requirement of DEN are similar to those of Vinyals et al. (2016) and Iwata & Kumagai (2020) given similar model sizes.

During pre-training, in each gradient step, we randomly sample a task $\mathbb{T} \in \{\mathbb{T}_t\}_{t=1}^M$, and sample query set A and support set B from $(\boldsymbol{X}_\mathbb{T}, \boldsymbol{y}_\mathbb{T})$. These two batches of covariates are first transformed using PLFs in (1). We then use (2) or (4) to obtain a distribution embedding $\boldsymbol{s}_\mathbb{T}$, taking the average with respect to the examples in the support set B. Next, we use the distribution embedding to make predictions on query set A using (3) or (5). Note that during training, $\boldsymbol{s}_\mathbb{T}$ is identical across examples within the same batch, but it could vary (even within the same task) across batches.

Table 1: Overview of training and evaluation.

Step	Input data	Transform	Embedding	Classification
Pre-training	Heterogeneous tasks $\{(\boldsymbol{x}_{\mathbb{T},i}, y_{\mathbb{T},i})\}_{\mathbb{T},i}$	Trained	Trained	Trained
Fine-tuning	Support set $\{(\boldsymbol{x}_{\mathbb{S},i}, y_{\mathbb{S},i})\}_i$	Trained $c_{\mathbb{S}}$	Fixed	Fixed
Evaluation	Query $\boldsymbol{x}_{\mathbb{S},q}$ and support set $\{(\boldsymbol{x}_{\mathbb{S},i}, y_{\mathbb{S},i})\}_i$	Fixed $c_{\mathbb{S}}$	Fixed	Fixed

If PLFs can approximately transform the covariates so that they admit the same f-expansion, then the rest of the network is task-agnostic. Thus, after pre-training on $\{\mathbb{T}_t\}_{t=1}^M$, for each new task $\mathbb{S}$, we can fine-tune the transformation block (1), while keeping the weights of other blocks fixed. Because PLFs only have a small number of parameters, they can be trained on a small support set from the task $\mathbb{S}$.

During inference, we first use the learned PLFs in (1) to transform covariates in both the support set and the query set. We then utilize the learned distribution embedding block to obtain $\boldsymbol{s}_{\mathbb{S}}$, where the average in (2) and (4) is taken over the whole support set. Finally, the embedding $\boldsymbol{s}_{\mathbb{S}}$ and PLF-transformed query set covariates are used to classify query set examples using (3) or (5).

5 Numerical Studies

In Section 5.1, we use OpenML tabular datasets to demonstrate the performance of DEN on real-world tasks. DEN achieves the best performance among a number of baseline methods. We then introduce in Section 5.2 an approach to simulate binary classification tasks, which allows us to generate a huge amount of pre-training examples without the need of collecting real tasks. Surprisingly, DEN (and several other methods) trained on simulated data can sometimes outperform those trained on real data. In Section 5.3, we examine the performance of DEN in relation to different architecture and hyper-parameter choices. The findings are: (a) PLF and fine-tuning are crucial when the training and test tasks are unrelated (e.g., when training tasks are simulated), whereas their effect is insignificant when the tasks are similar, and (b) the performance of DEN is relatively stable for small values of the dependency order r in Remark 4.1.

Baseline methods for comparison with DEN include Matching Net (Vinyals et al., 2016), Proto Net (Snell et al., 2017), TADAM (Oreshkin et al., 2018), PMN (Wang et al., 2018), Relation Net (Sung et al., 2018), CNP (Garnelo et al., 2018), MAML (Finn et al., 2017), BMAML (Finn et al., 2018), T-Net (Lee & Choi, 2018) and Iwata & Kumagai (2020). Hyperparameters of all methods are chosen based on cross-validation on training tasks. Hyperparameters, model structures and implementation details are summarized in Appendix B. Note that we set the dependency order $r = 2$ if it is not stated explicitly. For MAML, BMAML and T-net, we fine-tune the last layer of the base model for 5 epochs on the support set. For the rest of the methods, we train them with episodic training[2] (Vinyals et al., 2016).

5.1 Results on OpenML Classification Tasks

5.1.1 Binary classification

We compare DEN with baseline methods on 20 OpenML binary classification datasets (Vanschoren et al., 2013) following the setup in Iwata & Kumagai (2020) (see a list of datasets in Appendix C). These datasets have examples ranging from 200 to 1,000,000 and features ranging from 2 to 25.

We pre-train DEN and baseline methods on the OpenML datasets in the leave-one-dataset-out fashion. That is, for each of the 20 OpenML datasets chosen as a target task, we pre-train the models on the remaining 19 datasets. For the target task, we randomly select 50 examples to form the support set, and use the rest of the dataset as the test set. We repeat the whole procedure 20 times, and report the average AUC and the percentage of times each method achieves the best performance in Table 2 based on 20 test sets $\times$ 20 repeats. DEN has average AUC comparable with the best methods, and the frequency that it achieves the best AUC

[2]We will make the code of the experiments publicly available upon acceptance of this work.

Table 2: Average test AUC (standard error) and the percent of times that each method achieves the best performance on 20 OpenML datasets × 20 repeats.

Method	Average Test AUC (%)	% Best
Matching Net	50.11 (0.04)	0.00%
Proto Net	**71.11** (0.72)	27.50%
PMN	56.11 (0.65)	0.75%
Relation Net	51.65 (0.28)	0.25%
CNP	58.01 (0.69)	7.00%
Iwata & Kumagai (2020)	**70.35** (0.70)	26.75%
MAML	60.64 (0.82)	7.00%
T-Net	52.22 (0.41)	0.5%
DEN	**70.12** (0.83)	**30.25%**

Table 3: Test multi-class accuracy (standard error) and the percent of times that each method achieves the best performance on 8 OpenML datasets × 20 repeats.

Method	Accuracy (%)	% Best
Direct DNN	**45.68** (1.56)	13.6%
Matching Net	**46.36** (1.55)	13.8%
Proto Net	33.68 (1.80)	4.9%
PMN	24.77 (0.63)	0.0%
Relation Net	33.49 (1.82)	4.9%
CNP	18.77 (1.53)	1.1%
Iwata & Kumagai (2020)	24.93 (0.62)	0.0%
DEN	**48.60** (1.51)	**61.6%**

is highest among all methods. In Section 5.2, we will describe an approach to simulate binary classification training tasks. To our surprise, DEN trained on simulated tasks outperforms DEN trained on real tasks, and, in fact, achieves the best performance among all competing methods

5.1.2 Multiclass classification

In addition to binary classification tasks, we also compare DEN with baseline methods on 8 OpenML multi-class classification datasets. These datasets have examples ranging from 400 to 1,000,000, features ranging from 5 to 23, and number of classes ranging from 3 to 7. We train DEN and baseline methods on the OpenML datasets in the same leave-one-dataset-out fashion as in the binary classification. Results are summarized in Table 3. DEN achieved the best performance, followed by Matching Net. We also compare against directly training a DNN model on the support set, which achieved decent accuracy. But DEN remained the best methods in majority (61.6%) of cases.

5.2 Generate Training Tasks through Controlled Simulation

In this section, we describe an approach to generate binary classification pre-training tasks based on model aggregation. Comparing to pre-training meta-learning models on related real-world datasets, which could be expensive to collect, this synthetic approach can easily give us a huge amount of pre-training examples. We will show that meta-learning methods trained with simulated data can, surprisingly, sometimes outperform those trained with real data.

Table 4: Average test AUC (standard error) and the percent of times that each method achieves the best performance on 20 OpenML datasets × 20 repeats. The models are pre-trained on simulated data. We also report the improvement in average test AUC compared to pre-training on OpenML data.

Method	Average Test AUC (%)	% Best	Improv. in Test AUC (%)
Matching Net	53.88 (0.46)	0.00%	3.77 (0.46)
Proto Net	71.12 (0.65)	28.00%	0.01 (0.97)
PMN	59.04 (0.68)	1.25%	2.93 (0.94)
Relation Net	57.97 (0.59)	0.00%	6.32 (0.65)
CNP	60.95 (0.69)	2.50%	2.94 (0.98)
Iwata & Kumagai (2020)	66.01 (0.74)	11.50%	-4.34 (1.02)
MAML	61.16 (0.66)	2.75%	0.52 (1.05)
T-Net	53.35 (0.46)	0.25%	1.13 (0.62)
DEN	**74.13** (0.68)	**53.75%**	4.01 (1.07)

Specifically, we first take seven image classification datasets: CIFAR-10, CIFAR-100 (Krizhevsky, 2009), MNIST (LeCun et al., 2010), Fashion MNIST (Xiao et al., 2017), EMNIST (Cohen et al., 2017), Kuzushiji MNIST (KMNIST; Clanuwat et al., 2018) and SVHN (Netzer et al., 2011). On each dataset, we pick nine equally spaced cutoffs and binarize the labels based on whether the class id is below the cutoff. This gives rise to nine binary classification tasks for each dataset with positive label proportion in $\{0.1, 0.2, \ldots, 0.9\}$.

To generate covariates for each task, we build 50 convolution image classifiers of various model complexities (details in Appendix B) on each of the 63 tasks to predict the binary label. We take classification scores on the test set as covariates. With these covariates and associated labels, we construct $7 \times 9 = 63$ binary classification tasks $\{\mathbb{T}_1, \ldots, \mathbb{T}_{63}\}$. Essentially, they are model aggregation tasks since we are combining 50 classifiers to make a prediction. Note that the accuracy of those image classifiers ranges from below 0.6 to over 0.99, giving rise to covariates ranging widely in their signal-to-noise ratios.

Finally, to augment training data, we apply covariate sampling during pre-training. To be more concrete, in each pre-training step, we first randomly sample an integer $C \in \{1, \ldots, 50\}$ and a task from the 63 model aggregation tasks $\{\mathbb{T}_1, \ldots, \mathbb{T}_{63}\}$ described above. Then, among the 50 convolution image classifiers we built, we randomly pick C of them and use their classification scores as covariates to construct a *sub-task*. Finally, DEN takes labeled examples from this sub-task and uses them for training in this step. We shall emphasize that although training tasks are built based on image classification datasets, we do *not* use raw pixel values as covariates in pre-training.

OpenML binary classification with simulated training tasks. To illustrate the effectiveness of our data simulation approach, we use the models pre-trained on these data and evaluate them on the same 20 OpenML binary classification tasks in Section 5.1 after fine-tuning. Interestingly, as shown in Table 4, for 5 out of the 9 methods considered, pre-training on the simulated data gives us statistically significantly better test AUC. This suggests that the proposed approach to generate training tasks is not only convenient but also effective. Moreover, DEN pre-trained on the simulated data outperforms all methods (either pre-trained on the simulated data or OpenML data) significantly.

5.3 Effect of Dependence Order, PLF, and Fine-tuning

We continue our examination of DEN with pre-training on simulated data. In addition to comparing DEN with competing methods, we also study the performance of DEN in relation to its dependence order r, and the use of PLF and fine-tuning. For DEN, we explore three options: 1) fine-tune the PLF layer for 10 epochs, 2) take the PLF layer directly from the last pre-training epoch without fine-tuning, or 3) do not include a PLF layer in DEN and hence no fine-tuning at all.

Table 5: Test AUC (standard error) on Nomao and Puzzles data.

Method	Nomao	Puzzles
Matching Net	73.18 (2.23)	62.65 (1.45)
Proto Net	80.56 (0.56)	73.77 (0.37)
TADAM	82.42 (0.35)	74.86 (0.25)
PMN	77.00 (3.13)	57.69 (1.53)
Relation Net	52.32 (1.61)	63.73 (1.79)
CNP	91.40 (0.36)	53.20 (0.12)
Iwata & Kumagai (2020)	66.85 (3.23)	61.32 (0.52)
MAML	78.92 (2.22)	54.92 (0.54)
BMAML	47.20 (3.40)	53.49 (1.88)
T-Net	61.42 (3.44)	54.55 (1.78)
DEN w/o PLF w/o FT	59.01 (1.04)	68.87 (0.38)
DEN w/o FT	94.42 (0.16)	70.74 (0.62)
DEN	**95.21** (0.10)	**78.11** (0.53)

5.3.1 Tasks with Heterogeneous Covariate Spaces

We study and demonstrate the importance of PLF when the training and test tasks are heterogeneous. Specifically, we use all 63 tasks described in Section 5.2 for pre-training, and test the performance on two real datasets: Nomao and Puzzles. We give a short description of each dataset below.

- With Nomao data[3], we use seven features to classify whether two businesses are identical. Positive examples account for 71% of the data. All of the covariates are outputs from some other models. There are 50 examples in the support set.

- With Puzzles data[4], we use five features to classify whether the units sold for the respective puzzle game is above 45. 49% of examples are positive in the support set, and 51% in the query set. The support set (with 155 puzzles) covers the first six months period, whereas the non-iid query set (with 367 puzzles) covers the second and third six months periods.

For each dataset, we repeat the whole procedure 20 times and report the average AUC and standard error in Table 5. It is clear that DEN outperforms other baseline methods significantly. More importantly, the results also show that fine-tuning and PLF greatly improve the performance of DEN. Since DEN is pre-trained on simulated tasks which are completely unrelated to the target task, this improvement demonstrates the importance of fine-tuning and PLF when the training and target tasks are heterogeneous.

We also examine the effect of the size of the support set on the flexibility of the covariate transformation block. Figure 3 shows that with enough support set examples (e.g., Puzzles task), having more PLF keypoints benefits the test performance due to the improved ability of task-adaptation. However, if the support set is small (e.g., Nomao task), having a flexible covariate transformation block may not be helpful, and could even be marginally harmful.

Finally, we conduct an ablation study to examine the effect of dependency order in Remark 4.1 on the test AUC on the Nomao dataset. In particular, we examine DEN with $r \in [8]$. The results in Table 6 show that when $r \leq 5$, the test AUC is relatively stable, with the best performance achieved at $r = 2$; whereas the test AUC is much worse and unstable for larger r.

[3]https://archive.ics.uci.edu/ml/datasets/Nomao
[4]https://www.kaggle.com/dbahri/puzzles

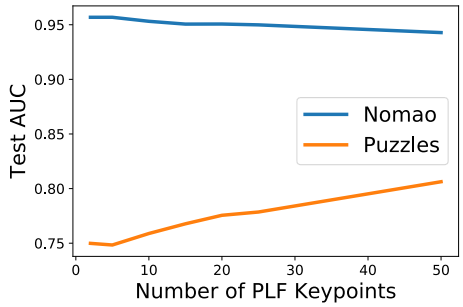

Figure 3: Test AUC versus the number of PLF keypoints on Nomao and Puzzles data.

Table 6: Test AUC (standard error) of DEN on Nomao data with different dependency order .

$r = 1$	$r = 2$	$r = 3$	$r = 4$
94.38 (0.46)	**95.21** (0.10)	93.80 (0.25)	92.61 (0.55)
$r = 5$	$r = 6$	$r = 7$	$r = 8$
93.16 (0.45)	91.22 (0.74)	88.95 (2.02)	89.15 (1.34)

5.3.2 Tasks with Homogeneous Covariate Spaces

We study the performance of DEN in the case when the training and target tasks are homogeneous. To ensure the task homogeneity, we use the model aggregation tasks described in Section 5.2 for both training and evaluation. Specifically, we use the $5 \times 9 = 45$ tasks described in Section 5.2 derived from CIFAR-10, CIFAR-100, MNIST, Fashion MNIST and EMNIST to train DEN and other meta-learning methods. We then pick four test tasks from SVHN and KMNIST of different difficulties, where the average AUCs over 50 classifiers are 68.28%, 78.11%, 91.51%, and 87.58%, respectively. Note that the training and test tasks are totally separated, but since the covariates for training and tests are all classifier scores, they likely follow similar distributions.

For each test task, we randomly select 100 sets of C classifiers among the 50 candidate classifiers, resulting in 100 aggregation sub-tasks. For each aggregation sub-task, we form a support set with 50 labeled examples and a disjoint query set with 8000 examples. We repeat the entire training and fine-tuning process for 5 times, and report the average AUC and its standard error.

Table 7 shows the result of aggregating an ensemble of $C = 25$ classifiers. Table 8 shows the result where the number of classifiers C to be aggregated is sampled uniformly from $[13, 25]$ and could vary across sub-tasks (100 aggregation sub-tasks $\times$ 5 repeats). To allow baseline methods to take varying number of covariates, we randomly duplicate some of the C classifiers so that all inputs have 25 covariates.

We observe that DEN significantly outperforms other methods in all tasks. We also observe that DEN without PLF and/or without fine-tuning is statistically no worse than DEN with fine-tuning on the PLF layer. This suggests that fine-tuning the PLF layer is not necessary when the input distribution is similar among training and test tasks.

6 Conclusion

In this work, we introduce a novel meta-learning method that can be applied to settings where both the distribution and number of covariates vary across tasks. This allows us to train the model on a wider range of training tasks and then adapt it to a variety of target tasks. Most other meta-learning techniques do not

Table 7: Test AUC (standard error) when aggregating 25 classifiers.

Method	Test AUC (%)			
	Task 1	Task 2	Task 3	Task 4
Matching Net	70.01 (0.40)	82.13 (0.05)	95.29 (0.06)	93.82 (0.08)
Proto Net	90.95 (0.05)	89.84 (0.03)	98.07 (0.01)	97.40 (0.02)
TADAM	90.98 (0.05)	89.90 (0.03)	98.14 (0.01)	97.57 (0.02)
PMN	86.78 (0.10)	88.69 (0.03)	97.46 (0.02)	96.22 (0.05)
Relation Net	85.39 (0.15)	88.70 (0.02)	97.25 (0.02)	95.55 (0.08)
CNP	86.53 (0.09)	88.80 (0.02)	97.50 (0.02)	96.22 (0.05)
Iwata & Kumagai (2020)	89.33 (0.05)	89.17 (0.02)	97.93 (0.01)	97.73 (0.02)
MAML	86.10 (0.11)	88.78 (0.03)	97.48 (0.02)	96.13 (0.06)
BMAML	71.38 (0.84)	85.96 (0.21)	97.04 (0.08)	95.39 (0.18)
T-Net	86.23 (0.10)	88.76 (0.03)	97.47 (0.02)	96.11 (0.06)
DEN w/o PLF w/o Fine-Tuning	91.53 (0.03)	**90.18** (0.02)	98.03 (0.01)	98.37 (0.01)
DEN w/o Fine-Tuining	**91.76** (0.03)	**90.20** (0.02)	**98.18** (0.01)	**98.41** (0.01)
DEN	**91.80** (0.03)	89.77 (0.02)	97.38 (0.01)	97.23 (0.01)

Table 8: Test AUC (standard error) when aggregating variable number of classifiers.

Method	Test AUC (%)			
	Task 1	Task 2	Task 3	Task 4
Matching Net	75.16 (0.37)	81.12 (0.08)	95.86 (0.04)	93.61 (0.08)
Proto Net	90.02 (0.11)	89.65 (0.04)	97.94 (0.02)	97.57 (0.02)
TADAM	90.20 (0.10)	89.74 (0.04)	98.04 (0.01)	97.84 (0.01)
PMN	85.68 (0.24)	88.59 (0.04)	97.30 (0.03)	95.83 (0.08)
Relation Net	80.85 (0.65)	88.53 (0.04)	97.11 (0.04)	95.03 (0.12)
CNP	84.97 (0.28)	88.71 (0.04)	97.31 (0.04)	95.96 (0.07)
Iwata & Kumagai (2020)	89.26 (0.16)	89.05 (0.03)	97.82 (0.02)	97.75 (0.02)
MAML	85.39 (0.23)	88.53 (0.04)	97.32 (0.04)	95.86 (0.08)
BMAML	59.57 (1.07)	85.40 (0.24)	96.73 (0.10)	94.53 (0.23)
T-Net	85.51 (0.22)	88.55 (0.04)	97.35 (0.03)	95.94 (0.07)
DEN w/o PLF w/o Fine-Tuning	91.06 (0.09)	**89.92** (0.03)	**98.09** (0.01)	**98.24** (0.01)
DEN w/o Fine-Tuning	**91.17** (0.09)	**89.95** (0.03)	97.95 (0.01)	98.10 (0.01)
DEN	**91.29** (0.03)	89.83 (0.02)	97.60 (0.03)	97.47 (0.01)

readily handle such settings. In numerical studies, we demonstrate that the proposed method outperforms a number of meta-learning baselines.

The proposed model consists of three flexible building blocks. Each block can be replaced by more advanced structures to further improve its performance. For instance, for the covariate transformation block, we may use pairwise transformations instead of one-dimensional PLFs to account for associations between covariates; for the classification block, based on results from earlier work, using a Set Transformer structure instead of a Deep Sets one may give us improved performance. DEN can also be combined with optimization based meta-learning methods, e.g., MAML. Finally, DEN can be applied to vision data when it is equipped with a pre-trained embedding model, i.e., treat the image embedding as the covariate vector. A current limitation of DEN is that it requires calculating the embedding for d^r different combinations of covariates, which is infeasible for high-dimensional tasks. A potential solution is to use a random subset of these combinations. We leave the exploration of these options to future work.

References

Han Altae-Tran, Bharath Ramsundar, Aneesh S Pappu, and Vijay Pande. Low data drug discovery with one-shot learning. *ACS central science*, 3(4), 2017.

Luca Bertinetto, João F. Henriques, Jack Valmadre, Philip H. S. Torr, and Andrea Vedaldi. Learning feed-forward one-shot learners. In *NIPS*, 2016.

Tarin Clanuwat, Mikel Bober-Irizar, Asanobu Kitamoto, Alex Lamb, Kazuaki Yamamoto, and David Ha. Deep learning for classical Japanese literature. *NeurIPS Workshop on Machine Learning for Creativity and Design*, 2018.

Gregory Cohen, Saeed Afshar, Jonathan Tapson, and Andre Van Schaik. EMNIST: Extending MNIST to handwritten letters. In *IJCNN*, 2017.

Wenyuan Dai, Yuqiang Chen, Guirong Xue, Qiang Yang, and Yong Yu. Translated learning: Transfer learning across different feature spaces. In *NIPS*, 2008.

Oscar Day and Taghi M. Khoshgoftaar. A survey on heterogeneous transfer learning. *Journal of Big Data*, 4, 2017.

Tristan Deleu and Yoshua Bengio. The effects of negative adaptation in model-agnostic meta-learning. *arXiv preprint*, 2018.

Lixin Duan, Dong Xu, and Ivor W. Tsang. Learning with augmented features for heterogeneous domain adaptation. In *ICML*, 2012.

Harrison Edwards and Amos Storkey. Towards a neural statistician. In *ICLR*, 2017.

Chelsea Finn, Pieter Abbeel, and Sergey Levine. Model-agnostic meta-learning for fast adaptation of deep networks. In *ICML*, 2017.

Chelsea Finn, Kelvin Xu, and Sergey Levine. Probabilistic model-agnostic meta-learning. In *NeurIPS*, 2018.

Marta Garnelo, Dan Rosenbaum, Christopher Maddison, Tiago Ramalho, David Saxton, Murray Shanahan, Yee Whye Teh, Danilo Rezende, and S. M. Ali Eslami. Conditional neural processes. In *ICML*, 2018.

Erin Grant, Chelsea Finn, Sergey Levine, Trevor Darrell, and Thomas Griffiths. Recasting gradient-based meta-learning as hierarchical Bayes. In *ICLR*, 2018.

Maya Gupta, Andrew Cotter, Jan Pfeifer, Konstantin Voevodski, Kevin Canini, Alexander Mangylov, Wojciech Moczydlowski, and Alexander van Esbroeck. Monotonic calibrated interpolated look-up tables. *Journal of Machine Learning Research*, 17(109), 2016.

Tomoharu Iwata and Atsutoshi Kumagai. Meta-learning from tasks with heterogeneous attribute spaces. In *NeurIPS*, 2020.

Lukasz Kaiser, Ofir Nachum, Aurko Roy, and Samy Bengio. Learning to remember rare events. In *ICLR*, 2017.

Gregory Koch, Richard Zemel, and Ruslan Salakhutdinov. Siamese neural networks for one-shot image recognition. In *ICML*, 2015.

Alex Krizhevsky. Learning multiple layers of features from tiny images. Technical report, University of Toronto, 2009.

Yann LeCun, Corinna Cortes, and CJ Burges. MNIST handwritten digit database. *ATT Labs [Online]. Available: http://yann.lecun.com/exdb/mnist*, 2010.

Juho Lee, Yoonho Lee, Jungtaek Kim, Adam Kosiorek, Seungjin Choi, and Yee Whye Teh. Set Transformer: A framework for attention-based permutation-invariant neural networks. In *ICML*, 2019.

Yoonho Lee and Seungjin Choi. Gradient-based meta-learning with learned layerwise metric and subspace. In *ICML*, 2018.

Haoliang Li, Sinno Jialin Pan, Shiqi Wang, and Alex C Kot. Domain generalization with adversarial feature learning. In *CVPR*, 2018a.

Wen Li, Lixin Duan, Dong Xu, and Ivor W. Tsang. Learning with augmented features for supervised and semi-supervised heterogeneous domain adaptation. *IEEE Transactions on Pattern Analysis and Machine Intelligence*, 36(6), 2014.

Ya Li, Xinmei Tian, Mingming Gong, Yajing Liu, Tongliang Liu, Kun Zhang, and Dacheng Tao. Deep domain generalization via conditional invariant adversarial networks. In *ECCV*, 2018b.

Yanbin Liu, Juho Lee, Minseop Park, Saehoon Kim, Eunho Yang, Sungju Hwang, and Yi Yang. Learning to propagate labels: Transductive propagation network for few-shot learning. In *ICLR*, 2019.

Nikhil Mishra, Mostafa Rohaninejad, Xi Chen, and Pieter Abbeel. A simple neural attentive meta-learner. In *ICLR*, 2018.

Krikamol Muandet, David Balduzzi, and Bernhard Schölkopf. Domain generalization via invariant feature representation. In *ICML*. PMLR, 2013.

Tsendsuren Munkhdalai and Hong Yu. Meta networks. In *ICML*, 2017.

Tsendsuren Munkhdalai, Xingdi Yuan, Soroush Mehri, and Adam Trischler. Rapid adaptation with conditionally shifted neurons. In *ICML*, 2018.

Yuval Netzer, Tao Wang, Adam Coates, Alessandro Bissacco, Bo Wu, and Andrew Y Ng. Reading digits in natural images with unsupervised feature learning. *NIPS Workshop on Deep Learning and Unsupervised Feature Learning*, 2011.

Boris N. Oreshkin, Pau Rodríguez López, and Alexandre Lacoste. TADAM: task dependent adaptive metric for improved few-shot learning. In *NeurIPS*, 2018.

Sachin Ravi and Hugo Larochelle. Optimization as a model for few-shot learning. In *ICLR*, 2017.

Andrei A. Rusu, Dushyant Rao, Jakub Sygnowski, Oriol Vinyals, Razvan Pascanu, Simon Osindero, and Raia Hadsell. Meta-learning with latent embedding optimization. In *ICLR*, 2019.

Adam Santoro, Sergey Bartunov, Matthew Botvinick, Daan Wierstra, and Timothy Lillicrap. Meta-learning with memory-augmented neural networks. In *ICML*, 2016.

Victor Garcia Satorras and Joan Bruna Estrach. Few-shot learning with graph neural networks. In *ICLR*, 2018.

Shiv Shankar, Vihari Piratla, Soumen Chakrabarti, Siddhartha Chaudhuri, Preethi Jyothi, and Sunita Sarawagi. Generalizing across domains via cross-gradient training. In *ICLR*, 2018.

Jian Shen, Yanru Qu, Weinan Zhang, and Yong Yu. Wasserstein distance guided representation learning for domain adaptation. In *AAAI*, 2018.

Jake Snell, Kevin Swersky, and Richard S. Zemel. Prototypical networks for few-shot learning. In *NIPS*, 2017.

Flood Sung, Yongxin Yang, Li Zhang, Tao Xiang, Philip H. S. Torr, and Timothy M. Hospedales. Learning to compare: Relation network for few-shot learning. In *CVPR*, 2018.

Joaquin Vanschoren, Jan N. van Rijn, Bernd Bischl, and Luis Torgo. Openml: Networked science in machine learning. *SIGKDD Explorations*, 15(2), 2013.

Oriol Vinyals, Charles Blundell, Tim Lillicrap, Koray Kavukcuoglu, and Daan Wierstra. Matching networks for one shot learning. In *NIPS*, 2016.

Jindong Wang, Cuiling Lan, Chang Liu, Yidong Ouyang, and Tao Qin. Generalizing to unseen domains: A survey on domain generalization. In Zhi-Hua Zhou (ed.), *Proceedings of the Thirtieth International Joint Conference on Artificial Intelligence, IJCAI-21*, pp. 4627–4635. International Joint Conferences on Artificial Intelligence Organization, 8 2021.

Yaqing Wang, Quanming Yao, James T Kwok, and Lionel M Ni. Generalizing from a few examples: A survey on few-shot learning. *ACM Computing Surveys*, 53(3), 2020.

Yu-Xiong Wang, Ross B. Girshick, Martial Hebert, and Bharath Hariharan. Low-shot learning from imaginary data. In *CVPR*, 2018.

Han Xiao, Kashif Rasul, and Roland Vollgraf. Fashion-MNIST: a novel image dataset for benchmarking machine learning algorithms. *ArXiv preprint*, 2017.

Yuguang Yan, Wen Li, Michael K. P. Ng, Mingkui Tan, Hanrui Wu, Huaqing Min, and Qingyao Wu. Learning discriminative correlation subspace for heterogeneous domain adaptation. In *IJCAI*, 2017.

Qiang Yang, Yuqiang Chen, Gui-Rong Xue, Wenyuan Dai, and Yong Yu. Heterogeneous transfer learning for image clustering via the social web. In *Proceedings of the 47th Annual Meeting of the ACL and the 4th IJCNLP of the AFNLP*, 2009.

Manzil Zaheer, Satwik Kottur, Siamak Ravanbakhsh, Barnabás Póczos, Ruslan Salakhutdinov, and Alexander J. Smola. Deep sets. In *NIPS*, 2017.

Joey Tianyi Zhou, Ivor W. Tsang, Sinno Jialin Pan, and Mingkui Tan. Multi-class heterogeneous domain adaptation. *Journal of Machine Learning Research*, 20, 2019.

Kaiyang Zhou, Ziwei Liu, Yu Qiao, Tao Xiang, and Chen Change Loy. Domain generalization: A survey. *ArXiv preprint*, 2021.