FEIN-Z: Autoregressive Behavior Cloning for Speech-Driven Gesture Generation

Anonymous Author(s)

ABSTRACT

Human communication relies on multiple modalities such as verbal expressions, facial cues, and bodily gestures. Developing computational approaches to process and generate these multimodal signals is critical for seamless human-agent interaction. A particular challenge is the generation of co-speech gestures due to the large variability and number of gestures that can accompany a verbal utterance, leading to a one-to-many mapping problem. This paper presents an approach based on a Feature Extraction Infusion Network (FEIN-Z) that adopts insights from robot imitation learning and applies them to co-speech gesture generation. Building on the BC-Z architecture, our framework combines transformer architectures and Wasserstein generative adversarial networks. We describe the FEIN-Z methodology and evaluation results obtained within the GENEA Challenge 2023, demonstrating good results and significant improvements in human-likeness over the GENEA baseline. We discuss potential areas for improvement, such as refining input segmentation, employing more fine-grained control networks, and exploring alternative inference methods.

CCS CONCEPTS

• **Human-centered computing** → **Interactive systems and tools**; *Empirical studies in interaction design*; **HCI theory, concepts and models**; • **Computing methodologies** → **Neural networks**; **Learning latent representations**; *Unsupervised learning*.

KEYWORDS

machine learning, deep learning, co-speech gesture generation, gesture synthesis, multimodal data, transformer, behavior cloning, reinforcement learning

ACM Reference Format:

Anonymous Author(s). 2023. FEIN-Z: Autoregressive Behavior Cloning for Speech-Driven Gesture Generation. In *Proceedings of ACM Conference (Conference'17)*. ACM, New York, NY, USA, 9 pages. https://doi.org/XXXXXXX.XXXXXXX

Permission to make digital or hard copies of all or part of this work for personal or classroom use is granted without fee provided that copies are not made or distributed for profit or commercial advantage and that copies bear this notice and the full citation on the first page. Copyrights for components of this work owned by others than ACM must be honored. Abstracting with credit is permitted. To copy otherwise, or republish, to post on servers or to redistribute to lists, requires prior specific permission and/or a fee. Request permissions from permissions@acm.org.

Conference'17, July 2017, Washington, DC, USA

© 2023 Association for Computing Machinery.

ACM ISBN 978-x-xxxx-xxxx-x/YY/MM…$15.00
https://doi.org/XXXXXXX.XXXXXXX

1 INTRODUCTION

Human communication is a multifaceted process that relies on various modalities, including verbal expressions, facial cues, and bodily gestures. Combining these modalities allows us to convey complex messages and facilitate meaningful interactions [8, 49]. Consequently, the development of machines that can process and generate these multi-modal signals is crucial to enable seamless interaction between humans and agents. A key aspect that makes gesture generation particularly challenging is the existence of multiple valid gestures for a given interaction. Unlike verbal expressions, which often have a single intended meaning, gestures can convey different nuances and interpretations, leading to a one-to-many mapping problem [40]. Capturing this inherent variability and generating contextually appropriate gestures is a complex task that requires careful consideration. The importance of gesture generation extends beyond research to practical applications in real-world scenarios and virtual environments. In human-robot interaction, gestures play a crucial role in enhancing communication and facilitating natural interactions between humans and robotic agents [55]. Similarly, in virtual reality, realistic and expressive gestures contribute to immersion and engagement, enabling more intuitive and compelling experiences [34]. Therefore, the development of robust and effective gesture-generation methods has great potential for improving various areas of human-machine interaction.

In this work, we propose the FEIN-Z framework, a combination of the proposed *Feature Extraction Infusion Network (FEIN)* and the zero-shot learning aspect of the BC-Z architecture *(Z)*. Inspired by recent achievements in robotic imitation learning, we extend the BC-Z approach [26] intended to generalize robotic manipulation tasks to unseen problems, to the co-speech gesture generation domain. As transformer architectures have shown promising results in a wide variety of domains [16, 47], including co-speech gesture generation [37], we replace and extend multiple components of the original BC-Z approach with a transformer architecture. Generative adversarial networks (GAN) are widely used in the robotic and co-speech gesture generation domain [19, 51]. Building upon the insight gained from recent approaches [51], we propose to use a Wasserstein generative adversarial networks (WGAN) with a Wasserstein divergence objective to guide our framework to generate natural and expressive gestures. The released evaluation results of the GENEA Challenge 2023 show that our framework outperforms the challenge baseline with regard to human-likeness by a significant margin and ranks in the top half of all evaluated approaches [30]. In the next sections, we will first give a brief overview of the existing work and current achievements of co-speech gesture generation (Section 2), before detailing the proposed *FEIN-Z* architecture, the individual components, the data processing, and our training procedure (Section 3). Finally, we will discuss the results of the performed evaluation (Section 4) and conclude with an outlook for possible improvements of our work (Section 5).

2 RELATED WORK

Gesture generation is an area of research that is rapidly progressing. Previous studies have explored various approaches, initially focusing on rule-based methods [9, 28, 33, 39] and simple computational models [7, 18], and later transitioning to early machine learning techniques [11, 22]. Currently, data-driven approaches that integrate multiple modalities are being employed [3, 40, 58], advancing the field even further.

Initially, gesture generation relied on manually crafted rules, either directly applied to specific avatars or used in conjunction with computational models that estimated appropriate gestures based on accompanying speech [9, 18, 28, 33]. Although these approaches generally struggled to produce natural and fluent gestures, they did enable the creation of complex representative gestures that are challenging to achieve with current data-driven methods [4, 5, 28, 33].

During the beginning of data-driven gesture generation, the focus was primarily on single modalities, where gestures were generated based on previous gesture frames [46], textual inputs [11, 55], or audio-driven inputs [17, 20, 22]. Recent research has witnessed a notable shift towards the generation of multi-modal co-speech gestures. This approach integrates gestures with audio, text, and other input modalities to produce varied and natural gestures. In order to accomplish this, advanced techniques such as general adversarial networks (GANs) [2, 40, 51, 53, 54], cyclic functions [25], glow networks with invertible convolutions [23], variational autoencoders [37, 45], and deep reinforcement learning have been used [45]. Recurrent neural networks, specifically Bi-Directional Long Short-Term Memory (Bi-Directional LSTM) and gated recurrent unit (GRU) [12, 24], have demonstrated the ability to generate natural co-speech gestures [22, 56], with various adaptations of recurrent architectures still being utilized in recent approaches [27, 29, 43, 50]. Notably, the incorporation of style embeddings has facilitated the generation of distinct gesture styles for individual speakers, thereby enabling diverse variations in gestures that are tailored to specific styles or speakers [20, 54].

Recent advancements in the field of co-speech gesture generation can be broadly categorized into two main approaches: retrieval-based methods and learning-based methods. Retrieval-based methods involve the creation or learning of predefined sets of gesture units and employ techniques such as keyword matching, semantic analysis, and prosody analysis to retrieve corresponding gestures from a comprehensive database [58]. Conversely, learning-based methods focus on training models to directly predict co-speech gestures using paired co-speech gesture data [54]. In recent studies, some researchers have automated the creation of gesture unit databases by leveraging training data. These gesture units are then employed to train deep learning models, enabling the generation of new and varied co-speech gestures [37]. Both retrieval-based and learning-based methods have proven to be effective in addressing the inherent challenge of one-to-many mapping in co-speech gestures [10, 31, 43, 54]. Notably, recent work on retrieval-based methods have even demonstrated superior performance compared to ground truth gestures [57, 58].

Simultaneously, significant progress has been made in the realm of reinforcement learning for robot control, particularly in the utilization of text and visual data as input. Within this context, text data is commonly employed either as action descriptions or goal descriptions. Recently, successful approaches have emerged leveraging large language models (LLMs), which generate suitable plans for given goals [1] [41] [35]. These approaches harness LLMs to break down goal descriptions into a sequence of feasible low-level actions expressed in natural language. Subsequently, the action descriptions undergo embedding and serve as additional input to a reinforcement learning model. As an example, PaLM-SayCan incorporates the BC-Z network [26] to acquire low-level robot skills by providing visual data of the current state alongside text descriptions of planned actions.

Both the co-speech gesture generation and reinforcement imitation learning domains share a common goal: to generate elaborate and complex outputs by acquiring knowledge from a relatively limited data set. As the imitation learning domain has made significant progress in minimizing the data requirements for generating complex outputs, we believe that these achievements can be leveraged in the gesture generation domain. Therefore, we propose our novel framework, which is built on the foundation of imitation learning, with the expectation of extending these advances to gesture generation.

3 MODEL AND METHOD

Our framework builds upon the BC-Z architecture by Jang et al. [26], which is a flexible imitation learning system that can learn from both demonstrations and interventions for a given Zero-Shot task. Similar to our approach, the BC-Z architecture generates its output in an autoregressive manner. However, given the unique domain and data characteristics of co-speech gestures, we have made several modifications to the backbone of the BC-Z architecture to adapt it to our domain. In particular, we replaced the vision network component of BC-Z with an attention-based network that takes inputs from each modality. In addition, we refined the Feature-wise Linear Modulation (FiLM) network [42], while retaining the fundamental concept of linear modulation applied to the previous embedding. We refer to this modified FiLM architecture as the *Feature Extraction Infusion Network (FEIN)*. Our framework takes audio, text, and speaker identity information from both the main agent and the interlocutor as input, alongside gestures from the interlocutor. To incorporate the temporal dimension of the provided data, we employ positional encoding techniques proposed by Vaswani et al. [48]. The attention-based network receives audio features, text features, and speaker identity information from both the main agent and the interlocutor. The FEIN module also utilizes this data, with the addition of previous t-gestures from both the main agent and the interlocutor. The output of the attention-based network is then combined with features extracted from the FEIN module. The resulting embedding is further processed by a joint-specific Fully Connected Network (FCN). In addition to the architectural refinements, we utilize a Wasserstein GAN network with gradient divergence (WGAN-div) to improve the generation performance of our framework [52]. For this purpose, we employ a discriminator with an FCN consisting of four linear layers, using the leaky ReLU activation function [38]. Figure 1 gives an overview of our approach. In the following sections, we will provide a detailed description of

the sub-modules of this framework, including the attention-based network, FEIN, and control network.

3.1 Transformer Blocks

The presented framework integrates a total of four transformer blocks, each characterized by a consistent underlying architecture with distinct parameters. These blocks consist of a multi-attention head followed by a feedforward network. To enhance the capabilities of the feedforward network, we have introduced the Swish-Gated Linear Unit (SwiGLU) activation function [44] into the transformer blocks. Consequently, the output y of the transformer blocks can be computed as follows:

$$x = \text{MultiHead}(Q, K, V) = \text{Concat}(\text{head}_1, \ldots, \text{head}_n)W^0$$
$$f(x) = \text{Swish}(x \cdot W_1) \otimes (x \cdot W_2)$$
$$y = f(x) \cdot W_3$$

In the above equations, $MultiHead$ denotes the multi-headed attention layer, $Swish$ represents the swish activation function and W corresponds to the weights of the linear functions.

3.2 Transformer Network

The BC-Z framework originally relied on visual data in the form of images to predict actions for the robot based on the current state. However, our scenario involves only non-visual data, requiring modifications to the original architecture. To address this, we adopted a transformer network, which is known for its ability to long-term dependencies in structured input data. The model considers audio and text inputs from both the main agent and the interlocutor. These inputs undergo a multi-attention head mechanism, facilitating the exploration and analysis of relationships between the main agent and the interlocutor, as well as the connections between text and audio across various time steps within the time window t. Subsequently, the attention-based embeddings derived from the aforementioned process are combined and passed through another multi-attention head. This additional step aims to discern and capture significant cues pertaining to the relationship between the audio and text data.

3.3 Feature Extraction Infusion Network (FEIN)

The FiLM network, originally employed in the BC-Z approach [26], requires a task description and a human demonstration video as inputs. However, this approach is not applicable to the specific case. Instead, we developed a novel network architecture that establishes connections between the current audio and text inputs and the gestures observed in the previous time window. Our primary objectives were twofold: to ensure coherent gesture generation by conditioning on the previous gestures and to incorporate additional contextual information into the current state. To achieve these objectives, we utilized two separate three-stacks of 1D-convolutional layers to process each input, which consisted of concatenated audio-text data and gesture information. This process yielded an embedding with an enriched spatial feature space, capturing important spatial relationships. To establish meaningful relationships within these embeddings, we employed a multi-head attention mechanism. Specifically, the gesture embedding served as both the query and value, while the audio-text embedding functioned as the key. This attention-based embedding captured relevant dependencies between the gestures and the audio-text data. The resulting attention-based embedding was then passed through two distinct feed-forward networks. Each network is comprised of two linear layers with SiLU activation functions, promoting non-linearity and information flow. A normalization layer was applied at the end of each network to ensure stable and consistent feature representations. Through this architectural design, we aimed to enable the model to extract two distinct feature tensors, namely the γ-tensor and the β-tensor, which encapsulate valuable information for the subsequent control model. These two feature tensors γ and β, encapsulating learned weights and biases, are then passed to our control model, which utilizes them to influence the gesture generation process and produce coherent and contextually relevant gestures.

3.4 Control Network

The embedding tensor, obtained from the transformer network, together with the gamma and beta tensors generated by the FEIN model, act as inputs for the control network, which is based on the architecture proposed in Jang et al. [26]. First, the embedding tensor is subjected to convolutional layer processing, resulting in a distilled embedding. This distilled embedding is then modulated and enriched through element-wise multiplication with the gamma tensor, thereby incorporating contextual information captured by the FEIN module. The modulated tensor is then processed by another convolutional layer, enabling the fusion of multiple information sources and yielding a transformed embedding. To further enhance the embedding with contextual cues, the transformed embedding is element-wise added with the beta tensor. This step augments the embedding with additional relevant contextual information. After passing the combined tensor through a final convolutional layer, the output is normalized, yielding a tensor that integrates both the currently relevant features and the essential contextual information. This integration is crucial for generating coherent gestures conditioned on the previous gestures. Subsequently, the resulting tensor is propagated through a series of fully connected networks, with each network generating joint configurations for a specific body part. This approach enables precise control over individual body parts, facilitating accurate manipulation of the model's movements. By leveraging this architectural design, the framework achieves detailed and contextually informed gesture generation, allowing for nuanced and realistic interactions.

3.5 Loss

The loss functions used in our framework are defined as follows. For the discriminator, the loss function is given by:

$$\mathcal{L}_{Dwdiv}(\mathbf{x}, D(\mathbf{z})) = Dis(\mathbf{x}) - Dis(D(\mathbf{z})) + \delta|\nabla_{\hat{\mathbf{x}}} Dis(\hat{\mathbf{x}})|^p \quad (1)$$

Here, Dis represents the discriminator function, $\mathbf{x}$ represents the original dataset, and $\mathbf{z}$ represents the reconstructed data. The hyperparameter δ controls the magnitude of the divergence penalty. The first component of the loss, $Dis(\mathbf{x}) - Dis(D(\mathbf{z}))$, measures the dissimilarity between the real sample $\mathbf{x}$ and the output of our framework, $D(\mathbf{z})$. The second term, $\delta|\nabla_{\hat{\mathbf{x}}} Dis(\hat{\mathbf{x}})|^p$, corresponds to

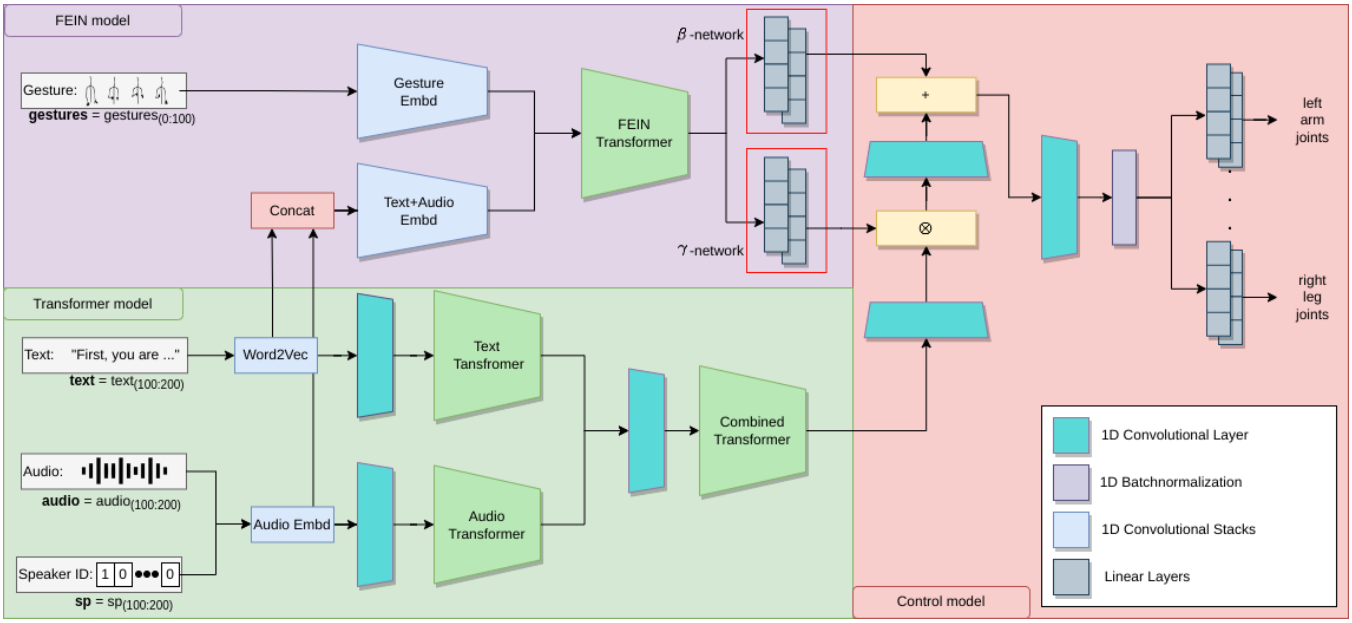

Figure 1: Top: The proposed FEIN model with the convolutional embedder, transformer block, and γ- and β-FCN. Bottom: Transformer model with transformer blocks. Right: Control model with convolutional layers and γ and β infusion. All inputs (Gesture, Text, Audio, Speaker ID) comprise the concatenated speaker and interlocutor information.

the divergence penalty, which encourages the generated sample $D(\mathbf{z})$ to closely resemble the distribution of real data. The generator loss function is defined as:

$$\mathcal{L}_{Gwdiv} = Dis(D(\mathbf{z})) \tag{2}$$

This loss function aims to minimize the output of the discriminator, specifically the evaluation of $Dis(D(\mathbf{z}))$.

For behavior cloning, we employ a scaled version of the smoothed L1 loss, defined as:

$$L1 = \begin{cases} \frac{0.5\theta(\frac{x}{\theta} - \frac{z}{\theta})^2}{\beta}, & \text{if } |x - z| < \beta \\ \theta|\frac{x}{\theta} - \frac{z}{\theta}| - 0.5\beta, & \text{otherwise} \end{cases} \tag{3}$$

This loss function is applied to the positions y and $\hat{y}$, velocities y' and $\hat{y}'$, and accelerations y'' and $\hat{y}''$. Fort his, the gradients are calculated using the following formula:

$$f(y) = \sum_{i=0}^{2} \lambda_i \frac{d^i y}{dt^i} \tag{4}$$

$$\mathcal{L}_{bc} = L1(f(y_i), f(\hat{y}_i)) \tag{5}$$

In these equations, y represents the true gestures, while y^* denotes the predicted gestures. The function $f(y)$ calculates the gradients of the variable or function y with respect to time. The superscript i in $\frac{d^i y}{dt^i}$ indicates the order of the derivative, ranging from 0 to 2. The λ_i terms are scaling factors applied to the position, velocity, and acceleration losses.

The term $\mathcal{L}_{bc}$ corresponds to the loss function used for back-propagation. It is computed as the average of the individual loss terms L_i over a dataset of size N. Each L_i measures the dissimilarity between the calculated gradients $f(y_i)$ and the target gradients $f(y_i^*)$. Together, this loss ensures a temporal consistency of the generated gestures. The overall loss function used in our framework is a combination of the behavior cloning loss ($\mathcal{L}_{bc}$) and the discriminator loss ($\mathcal{L}_{G_{wdiv}}$):

$$\mathcal{L}_{total} = \mathcal{L}_{bc} + \mathbb{1}n \cdot \lambda_g \mathcal{L}_{G_{wdiv}} \tag{6}$$

Here, $\mathbb{1}_n(s)$ is an indicator function defined as:

$$\mathbb{1}_n(s) = \begin{cases} 1, & \text{if } s \,\%\, n = 0 \\ 0, & \text{otherwise} \end{cases} \tag{7}$$

This indicator function is used to determine when to apply the discriminator loss. The parameter n controls the frequency of applying the discriminator loss, and the scaling factor λ_g adjusts the relative importance of the discriminator loss compared to the behavior cloning loss. By combining these components, the overall loss function guides the training process to improve the quality and consistency of the generated gestures.

3.6 Data Processing

The Genea Challenge 2023 provided an adapted version of the Talking With Hands 16.2M dataset [32], extended to a dyadic setting involving both a speaker and an interlocutor. This dataset encompasses various modalities, including 3D full-body gesture data, audio data, text transcripts, and the speaker ID, all organized separately for the speaker and the interlocutor. As part of the challenge, the data was pre-separated into a training set of 371 sequences, a validation set of 40 sequences, and a test set of 69 sequences. Each sequence is approximately 1 minute in length, with a sample rate of 44100 Hz for the audio data. The gesture data was recorded at 30

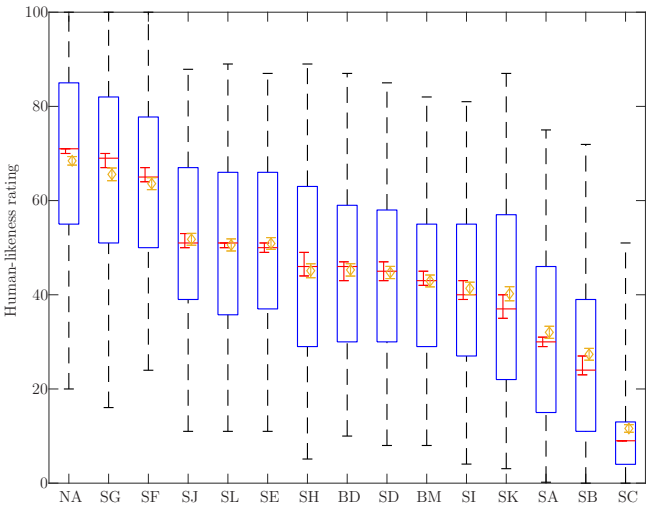

Figure 2: Box plot visualization for the human-likeness study, provided by the GENEA Challenge 2023 [30]. Our framework is labeled SE. Median ratings are shown as red bars (with 0.05 CI) and mean ratings as yellow diamonds (with 0.05 CI). Box edges indicate the 25th and 75th percentiles. Whiskers cover 95% of ratings for each condition.

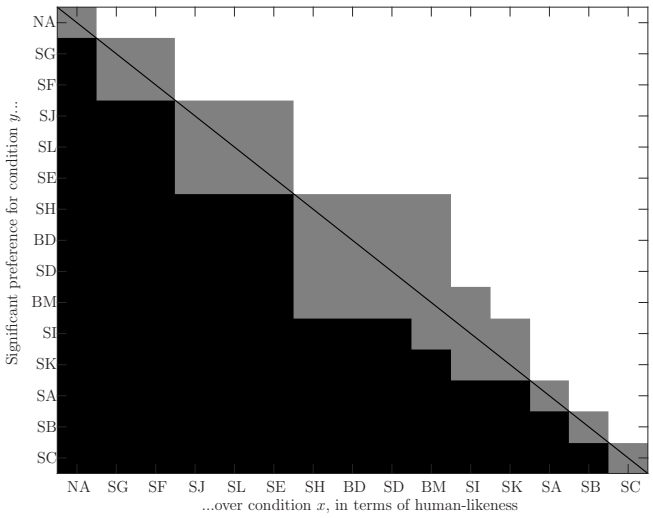

Figure 3: Significant differences between all approaches, provided by GENEA Challenge 2023 [30]. Our framework is labeled SE. White indicates that the condition on the y-axis is rated significantly higher than the one on the x-axis, while black indicates the opposite (y-rated below x). Gray indicates no statistically significant difference at a significance level of $\alpha = 0.05$, after applying the Holm-Bonferroni correction.

frames per second. Since the challenge required the generation of the speaker for the test set, this data was omitted.

For our approach, we built upon the preprocessing pipeline established by Chang et al. [10], making necessary modifications to suit our specific requirements. For the audio data, we used multiple feature extraction techniques to obtain three different features: Mel Frequency Cepstral Coefficients (MFCC) with 40 dimensions, Mel Spectrograms with 64 filter banks, and prosody features. All audio features were computed using a window length of 4096 and a hop length of 1470. Regarding the text transcripts, we used the FastText word embedding model [6], which assigns a 300-dimensional vector representation to each word in the transcript. Since the temporal duration of each word is known, we generated a vector of size [sequence length, 300] containing the corresponding word embedding vector for each word's duration. For the gesture data, we transformed the rotation of each body and finger joint in the BVH file into an exponential map representation [21]. This transformation resulted in 56 3D body joints for the gesture data.

In the post-processing phase of the gesture output, we performed two operations. First, we clipped the angle of each generated body joint to be within the range of the 2nd and 98th percentiles of the corresponding joint in the training data. This clipping step ensured that the generated angles remained within a reasonable range. Afterward, we applied a rolling window calculation over 50 frames to smooth the generated output and improve its temporal coherence.

3.7 Training procedure

The training procedure incorporates both behavior cloning and the WGAN architecture. In our setup, The network is responsible for generating gestures, while the discriminator is used to discriminate between the generated data and the original data. We chose a batch size of 128 and a sequence length of 200 frames, which corresponds to two frame windows: $t_{-1} := [0-99]$ and $t_0 := [100-199]$. For the optimizer, we use AdamW [36] with a weight decay parameter of 0.01 for both the FEIN network and the discriminator. For the FEIN model, we select a learning rate of $5e-5$, while the discriminator utilizes a learning rate of $1e-4$. During training, we set the scaling factor λ_g to 0.05.

The audio and text data used in training comes from t_0, while the gesture data is sourced from t_{-1}. After each prediction step, we optimize the model using the loss function described in 6, and we optimize the discriminator accordingly using its loss function, as defined in 1. To prevent the network from consistently outperforming the discriminator and to stabilize the training, we apply the 2 loss only every $n = 4$ steps. In total, we trained our framework for 60 epochs. Every 10 epochs, we computed the validation loss and used the best-performing model to generate the evaluation data.

4 EVALUATION

During the training phase of the framework, we conducted a thorough analysis of various framework configurations, experimenting with different numbers of transformer blocks and parameters. We also explored frameworks that generated gestures for both the main agent and the interlocutor, as well as different input data for the FEIN model. Among these tested frameworks, many did not yield satisfactory results in terms of generating realistic and coherent gestures. As a result, we selected the framework proposed in this study as the most suitable for our purposes.

The main evaluation of the framework was performed alongside other approaches within the GENEA Challenge 2023. Since

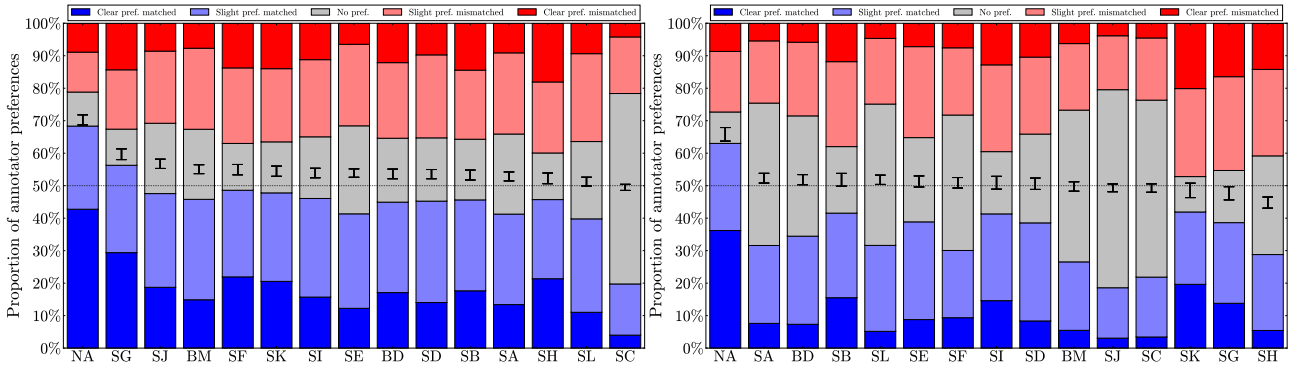

(a) Appropriateness for agent speech

(b) Appropriateness for the interlocutor

Figure 4: Bar plots visualizing the response distribution in the appropriateness studies, provided by the GENEA Challenge 2023 [30]. Our framework is labeled SE. The blue bar (bottom) represents responses where subjects preferred the matched motion, the light grey bar (middle) represents tied responses, and the red bar (top) represents responses preferring mismatched motion, with the height of each bar being proportional to the fraction of responses in each category. Lighter colors correspond to slight preference, and darker colors to clear preference. On top of each bar is also a confidence interval for the mean appropriateness score, scaled to fit the current axes. The dotted black line indicates chance-level performance. Conditions are ordered by mean appropriateness score.

the evaluation of generated co-speech gestures is largely subjective and objective measures that strongly correlate with subjective evaluations are lacking [40], the evaluation focused primarily on subjective measures. Three specific aspects were evaluated: "Human-Likeness", "Appropriateness for Agent Speech", and "Appropriateness for the Interlocutor". To ensure anonymity, all published results were anonymized and assigned unique labels. Our framework was labeled ***SE***.

4.1 Human-Likeness

The results of the Human-Likeness evaluation are shown in Figure 2, illustrating the rating distribution obtained for the different approaches. Figure 3 highlights the significant differences between the competitors. Here, our framework receives significantly higher ratings than the dyadic baseline (**BD**), the monadic baseline (**BM**), as well as the approaches **SH**, **SD**, **SI**, **SK**, **SA**, **SB**, and **SC**. On the other hand, compared to the natural motion (**NA**) and the approaches **SG** and **SF**, our framework receives significantly lower ratings for human-likeness. There were no significant differences in terms of human-likeness between our approach and the approaches **SF**, **SJ**, and **SL**.

A significant limitation of our approach, especially concerning human-like gesturing, was the lack of finger movement in all of the generated gestures. Although we trained our framework to produce output for the finger bones, the resulting gestures consistently exhibited a static finger position. Any changes observed in the finger bones were primarily intended to prevent the introduction of artifacts, rather than to add meaningful information to the generated gestures.

Another notable issue was the rapid change of poses in our framework. Although the evaluation did only capture footage from the knees up, to prevent feet sliding to influence the evaluation, our model consistently exhibited movements that involved a redistribution of weight in the lower part of the torso. Such movements may have compromised the naturalness of the generated gestures and led to a lower ranking in the human-likeness evaluation.

4.2 Appropriateness

The results of the speech appropriateness evaluation for the main agent are depicted in Figure 4a. These ratings indicate the likelihood of each framework being preferred with matching or mismatching gestures. Our proposed framework, labeled **SE**, demonstrates statistical significance in terms of speech appropriateness compared to random chance. However, it is notably inferior to framework **SG**, which exhibits significantly better performance. Additionally, there is no significant difference between our framework and the approaches **SJ**, **SF**, **SK**, **SD**, **SI**, **SK**, **SB**, **SA**, and **SH** in terms of speech appropriateness. The results of the appropriateness of gestures in response to the interlocutor are presented in Figure 4b. These ratings reflect the likelihood of each framework being preferred with matching or mismatching gestures. Our framework does not exhibit statistical significance compared to random chance in this aspect. Our model does achieve a significantly higher mean appropriateness score (MAS) compared to frameworks **SG** and **SH**, and a significantly lower MAS compared to the natural motion **NA**. Furthermore, our model does not differ significantly from the dyadic and monadic baselines, as well as frameworks **SA**, **SB**, **SL**, **SF**, **SI**, **SD**, **SJ**, **SC**, and **SK**, in terms of appropriateness of gestures in response to the interlocutor.

The evaluation results presented here show a notable discrepancy when compared to the results of the human similarity evaluation. While our framework is able to generate co-speech gestures that are perceived as more human-like than the baseline used in the

challenge, this does not mean that the generated gestures are perceived as more appropriate for the given context than the baseline. Although the lack of finger bone information could be a possible explanation for this, we suggest that it is indicative of a general problem common to all current approaches to co-speech gesture generation. Current approaches excel at producing gestures that appear natural and unobtrusive within a given conversation, which is already a commendable achievement for human-agent interaction. However, this still falls well short of replicating human-to-human interaction. In human-to-human communication, individuals convey additional meaning through their gestures [13], which is based on a shared mental model of the current conversation, themselves, and the conversation partner [14, 15]. With this shared understanding, conversational partners can adapt their gestures to each other and effectively convey meaningful information. Since our framework, and to the best of our knowledge all other available co-speech gesture approaches, lacks this essential insight into the conversation partner, the generated gestures appear highly interchangeable to any human evaluator.

5 CONCLUSION

Our framework presents a novel approach to co-speech gesture generation inspired by robotic imitation learning and based on a behavior cloning architecture. We combine a transformer architecture with a generative adversarial network to create a model that ranks in the top half of the GENEA Challenge 2023 [30]. Although the model did not achieve results comparable to natural motion, we believe that additional training time and more sophisticated input segmentation could lead to improved results. An effective strategy may involve the use of only historical data in the FEIN model to ensure that the input data consists only of aligned gesture, audio, and text data. In addition, the use of a finer-grained control network that distinguishes separate body parts, such as hands and arms, could have the potential to improve the generated gestures. Increasing the feedback provided by the discriminator model in later stages of training is another way to improve performance, as the discriminator shows diminishing returns as training progresses. Additionally, selectively freezing certain models within our framework during later stages of training to focus on refining gestures could lead to performance improvements. Similarly, exploring alternative inference methods, such as predicting one frame at a time or adjusting the time window, may also help to improve the capabilities of the framework.

In conclusion, we believe that our architecture demonstrates the potential to generate gestures that exhibit some human-like characteristics, and we believe that there are several ways in which our framework could be improved in the future. Finally, we hypothesize that the integration of frameworks introduced in multimodal robot learning could further enhance the performance of future gesture generation models.

REFERENCES

[1] Michael Ahn, Anthony Brohan, Noah Brown, Yevgen Chebotar, Omar Cortes, Byron David, Chelsea Finn, Chuyuan Fu, Keerthana Gopalakrishnan, Karol Hausman, Alex Herzog, Daniel Ho, Jasmine Hsu, Julian Ibarz, Brian Ichter, Alex Irpan, Eric Jang, Rosario Jauregui Ruano, Kyle Jeffrey, Sally Jesmonth, Nikhil Joshi, Ryan Julian, Dmitry Kalashnikov, Yuheng Kuang, Kuang-Huei Lee, Sergey Levine, Yao Lu, Linda Luu, Carolina Parada, Peter Pastor, Jornell Quiambao, Kanishka Rao, Jarek Rettinghouse, Diego Reyes, Pierre Sermanet, Nicolas Sievers, Clayton Tan, Alexander Toshev, Vincent Vanhoucke, Fei Xia, Ted Xiao, Peng Xu, Sichun Xu, Mengyuan Yan, and Andy Zeng. 2022. Do As I Can and Not As I Say: Grounding Language in Robotic Affordances. In *arXiv preprint arXiv:2204.01691*.

[2] Chaitanya Ahuja, Dong Won Lee, Yukiko I. Nakano, and Louis-Philippe Morency. 2020. Style Transfer for Co-Speech Gesture Animation: A Multi-Speaker Conditional-Mixture Approach. https://doi.org/10.48550/arXiv.2007.12553 arXiv:2007.12553 [cs].

[3] Simon Alexanderson, Éva Székely, Gustav Eje Henter, Taras Kucherenko, and Jonas Beskow. 2020. Generating coherent spontaneous speech and gesture from text. In *Proceedings of the 20th ACM International Conference on Intelligent Virtual Agents*. 1–3. https://doi.org/10.1145/3383652.3423874 arXiv:2101.05684 [cs, eess].

[4] James Allen, Mehdi Manshadi, Myroslava Dzikovska, and Mary Swift. 2007. Deep linguistic processing for spoken dialogue systems. In *Proceedings of the Workshop on Deep Linguistic Processing - DeepLP '07*. Association for Computational Linguistics, Prague, Czech Republic, 49. https://doi.org/10.3115/1608912.1608922

[5] Kirsten Bergmann, Sebastian Kahl, and Stefan Kopp. 2013. Modeling the Semantic Coordination of Speech and Gesture under Cognitive and Linguistic Constraints. In *Intelligent Virtual Agents*, David Hutchison, Takeo Kanade, Josef Kittler, Jon M. Kleinberg, Friedemann Mattern, John C. Mitchell, Moni Naor, Oscar Nierstrasz, C. Pandu Rangan, Bernhard Steffen, Madhu Sudan, Demetri Terzopoulos, Doug Tygar, Moshe Y. Vardi, Gerhard Weikum, Ruth Aylett, Brigitte Krenn, Catherine Pelachaud, and Hiroshi Shimodaira (Eds.). Vol. 8108. Springer Berlin Heidelberg, Berlin, Heidelberg, 203–216. https://doi.org/10.1007/978-3-642-40415-3_18 Series Title: Lecture Notes in Computer Science.

[6] Piotr Bojanowski, Edouard Grave, Armand Joulin, and Tomas Mikolov. 2017. Enriching Word Vectors with Subword Information. https://doi.org/10.48550/arXiv.1607.04606 arXiv:1607.04606 [cs].

[7] Matthew Brand and Aaron Hertzmann. 2000. Style machines. In *Proceedings of the 27th annual conference on Computer graphics and interactive techniques (SIGGRAPH '00)*. ACM Press/Addison-Wesley Publishing Co., USA, 183–192. https://doi.org/10.1145/344779.344865

[8] Justine Cassell, David Mcneill, and Karl-Erik Mccullough. 1994. Speech-Gesture Mismatches: Evidence for One Underlying Representation of Linguistic and Nonlinguistic Information. *Cognition* 7 (Jan. 1994). https://doi.org/10.1075/pc.7.1.03cas

[9] Justine Cassell, Hannes Högni Vilhjálmsson, and Timothy Bickmore. 2004. BEAT: the Behavior Expression Animation Toolkit. In *Life-Like Characters: Tools, Affective Functions, and Applications*, Helmut Prendinger and Mitsuru Ishizuka (Eds.). Springer, Berlin, Heidelberg, 163–185. https://doi.org/10.1007/978-3-662-08373-4_8

[10] Che-Jui Chang, Sen Zhang, and Mubbasir Kapadia. 2022. The IVI Lab entry to the GENEA Challenge 2022 – A Tacotron2 Based Method for Co-Speech Gesture Generation With Locality-Constraint Attention Mechanism. In *INTERNATIONAL CONFERENCE ON MULTIMODAL INTERACTION*. ACM, Bengaluru India, 784–789. https://doi.org/10.1145/3536221.3558060

[11] Chung-Cheng Chiu, Louis-Philippe Morency, and Stacy Marsella. 2015. Predicting Co-verbal Gestures: A Deep and Temporal Modeling Approach. In *Intelligent Virtual Agents*, Willem-Paul Brinkman, Joost Broekens, and Dirk Heylen (Eds.). Vol. 9238. Springer International Publishing, Cham, 152–166. https://doi.org/10.1007/978-3-319-21996-7_17 Series Title: Lecture Notes in Computer Science.

[12] Kyunghyun Cho, Bart van Merrienboer, Caglar Gulcehre, Dzmitry Bahdanau, Fethi Bougares, Holger Schwenk, and Yoshua Bengio. 2014. Learning Phrase Representations using RNN Encoder-Decoder for Statistical Machine Translation. https://doi.org/10.48550/arXiv.1406.1078 arXiv:1406.1078 [cs, stat].

[13] Sharice Clough and Melissa C. Duff. 2020. The Role of Gesture in Communication and Cognition: Implications for Understanding and Treating Neurogenic Communication Disorders. *Frontiers in Human Neuroscience* 14 (2020). https://doi.org/10.3389/fnhum.2020.00323

[14] Ilaria Cutica and Monica Bucciarelli. 2011. "The More You Gesture, the Less I Gesture": Co-Speech Gestures as a Measure of Mental Model Quality. *Journal of Nonverbal Behavior* 35, 3 (Sept. 2011), 173–187. https://doi.org/10.1007/s10919-011-0112-7

[15] Ilaria Cutica and Monica Bucciarelli. 2013. Cognitive change in learning from text: Gesturing enhances the construction of the text mental model. *Journal of Cognitive Psychology* 25, 2 (March 2013), 201–209. https://doi.org/10.1080/20445911.2012.743987

[16] Alexey Dosovitskiy, Lucas Beyer, Alexander Kolesnikov, Dirk Weissenborn, Xiaohua Zhai, Thomas Unterthiner, Mostafa Dehghani, Matthias Minderer, Georg Heigold, Sylvain Gelly, Jakob Uszkoreit, and Neil Houlsby. 2021. An Image is Worth 16x16 Words: Transformers for Image Recognition at Scale. https://doi.org/10.48550/arXiv.2010.11929 arXiv:2010.11929 [cs].

[17] Ylva Ferstl, Michael Neff, and Rachel McDonnell. 2019. Multi-objective adversarial gesture generation. In *Proceedings of the 12th ACM SIGGRAPH Conference on Motion, Interaction and Games (MIG '19)*. Association for Computing Machinery, New York, NY, USA, 1–10. https://doi.org/10.1145/3359566.3360053

[18] Aphrodite Galata, Neil Johnson, and David Hogg. 2001. Learning Variable-Length Markov Models of Behavior. *Computer Vision and Image Understanding* 81, 3 (March 2001), 398–413. https://doi.org/10.1006/cviu.2000.0894

[19] Chongkai Gao, Haichuan Gao, Shangqi Guo, Tianren Zhang, and Feng Chen. 2021. CRIL: Continual Robot Imitation Learning via Generative and Prediction Model. In *2021 IEEE/RSJ International Conference on Intelligent Robots and Systems (IROS)*. 6747–5754. https://doi.org/10.1109/IROS51168.2021.9636069 ISSN: 2153-0866.

[20] Shiry Ginosar, Amir Bar, Gefen Kohavi, Caroline Chan, Andrew Owens, and Jitendra Malik. 2019. Learning Individual Styles of Conversational Gesture. https://doi.org/10.48550/arXiv.1906.04160 arXiv:1906.04160 [cs, eess].

[21] F. Sebastian Grassia. 1998. Practical Parameterization of Rotations Using the Exponential Map. *Journal of Graphics Tools* 3, 3 (Jan. 1998), 29–48. https://doi.org/10.1080/10867651.1998.10487493

[22] Dai Hasegawa, Naoshi Kaneko, Shinichi Shirakawa, Hiroshi Sakuta, and Kazuhiko Sumi. 2018. Evaluation of Speech-to-Gesture Generation Using Bi-Directional LSTM Network. In *Proceedings of the 18th International Conference on Intelligent Virtual Agents (IVA '18)*. Association for Computing Machinery, New York, NY, USA, 79–86. https://doi.org/10.1145/3267851.3267878

[23] Gustav Eje Henter, Simon Alexanderson, and Jonas Beskow. 2020. MoGlow: Probabilistic and controllable motion synthesis using normalising flows. *ACM Transactions on Graphics* 39, 6 (Dec. 2020), 1–14. https://doi.org/10.1145/3414685.3417836 arXiv:1905.06598 [cs, eess, stat].

[24] Sepp Hochreiter and Jürgen Schmidhuber. 1997. Long Short-Term Memory. *Neural Computation* 9, 8 (Nov. 1997), 1735–1780. https://doi.org/10.1162/neco.1997.9.8.1735 Conference Name: Neural Computation.

[25] Daniel Holden, Taku Komura, and Jun Saito. 2017. Phase-functioned neural networks for character control. *ACM Transactions on Graphics* 36, 4 (Aug. 2017), 1–13. https://doi.org/10.1145/3072959.3073663

[26] Eric Jang, Alex Irpan, Mohi Khansari, Daniel Kappler, Frederik Ebert, Corey Lynch, Sergey Levine, and Chelsea Finn. 2022. BC-Z: Zero-Shot Task Generalization with Robotic Imitation Learning. In *Proceedings of the 5th Conference on Robot Learning (Proceedings of Machine Learning Research, Vol. 164)*, Aleksandra Faust, David Hsu, and Gerhard Neumann (Eds.). PMLR, 991–1002. https://proceedings.mlr.press/v164/jang22a.html

[27] Naoshi Kaneko, Yuna Mitsubayashi, and Geng Mu. 2022. TransGesture: Autoregressive Gesture Generation with RNN-Transducer. In *INTERNATIONAL CONFERENCE ON MULTIMODAL INTERACTION*. ACM, Bengaluru India, 753–757. https://doi.org/10.1145/3536221.3558061

[28] Stefan Kopp, Brigitte Krenn, Stacy Marsella, Andrew N. Marshall, Catherine Pelachaud, Hannes Pirker, Kristinn R. Thórisson, and Hannes Vilhjálmsson. 2006. Towards a Common Framework for Multimodal Generation: The Behavior Markup Language. In *Intelligent Virtual Agents (Lecture Notes in Computer Science)*, Jonathan Gratch, Michael Young, Ruth Aylett, Daniel Ballin, and Patrick Olivier (Eds.). Springer, Berlin, Heidelberg, 205–217. https://doi.org/10.1007/11821830_17

[29] Vladislav Korzun, Anna Beloborodova, and Arkady Ilin. 2022. ReCell: replicating recurrent cell for auto-regressive pose generation. In *INTERNATIONAL CONFERENCE ON MULTIMODAL INTERACTION*. ACM, Bengaluru India, 94–97. https://doi.org/10.1145/3536220.3558801

[30] Taras Kucherenko, Rajmund Nagy, Youngwoo Yoon, Jieyeon Woo, Teodor Nikolov, Mihail Tsakov, and Gustav Eje Henter. 2023. The GENEA Challenge 2023: A large-scale evaluation of gesture generation models in monadic and dyadic settings. In *Proceedings of the ACM International Conference on Multimodal Interaction (ICMI '23)*. ACM.

[31] Dong Won Lee, Chaitanya Ahuja, and Louis-Philippe Morency. 2021. Crossmodal Clustered Contrastive Learning: Grounding of Spoken Language to Gesture. In *Companion Publication of the 2021 International Conference on Multimodal Interaction*. ACM, Montreal QC Canada, 202–210. https://doi.org/10.1145/3461615.3485408

[32] Gilwoo Lee, Zhiwei Deng, Shugao Ma, Takaaki Shiratori, Siddhartha Srinivasa, and Yaser Sheikh. 2019. Talking With Hands 16.2M: A Large-Scale Dataset of Synchronized Body-Finger Motion and Audio for Conversational Motion Analysis and Synthesis. In *2019 IEEE/CVF International Conference on Computer Vision (ICCV)*. IEEE, Seoul, Korea (South), 763–772. https://doi.org/10.1109/ICCV.2019.00085

[33] Jina Lee and Stacy Marsella. 2006. Nonverbal Behavior Generator for Embodied Conversational Agents. In *Intelligent Virtual Agents (Lecture Notes in Computer Science)*, Jonathan Gratch, Michael Young, Ruth Aylett, Daniel Ballin, and Patrick Olivier (Eds.). Springer, Berlin, Heidelberg, 243–255. https://doi.org/10.1007/11821830_20

[34] Yang Li, Jin Huang, Feng Tian, Hong-An Wang, and Guo-Zhong Dai. 2019. Gesture interaction in virtual reality. *Virtual Reality & Intelligent Hardware* 1, 1 (Feb. 2019), 84–112. https://doi.org/10.3724/SP.J.2096-5796.2018.0006

[35] Kevin Lin, Christopher Agia, Toki Migimatsu, Marco Pavone, and Jeannette Bohg. 2023. Text2Motion: From Natural Language Instructions to Feasible Plans. arXiv:2303.12153 [cs.RO]

[36] Ilya Loshchilov and Frank Hutter. 2019. Decoupled Weight Decay Regularization. https://doi.org/10.48550/arXiv.1711.05101 arXiv:1711.05101 [cs, math].

[37] Shuhong Lu and Andrew Feng. 2022. The DeepMotion entry to the GENEA Challenge 2022. In *INTERNATIONAL CONFERENCE ON MULTIMODAL INTERACTION*. ACM, Bengaluru India, 790–796. https://doi.org/10.1145/3536221.3558059

[38] Andrew L Maas, Awni Y Hannun, and Andrew Y Ng. [n. d.]. Rectifier Nonlinearities Improve Neural Network Acoustic Models. ([n. d.]).

[39] Stacy Marsella, Yuyu Xu, Margaux Lhommet, Andrew Feng, Stefan Scherer, and Ari Shapiro. 2013. Virtual character performance from speech. In *Proceedings of the 12th ACM SIGGRAPH/Eurographics Symposium on Computer Animation*. ACM, Anaheim California, 25–35. https://doi.org/10.1145/2485895.2485900

[40] Simbarashe Nyatsanga, Taras Kucherenko, Chaitanya Ahuja, Gustav Eje Henter, and Michael Neff. 2023. A Comprehensive Review of Data-Driven Co-Speech Gesture Generation. *Computer Graphics Forum* 42, 2 (May 2023), 569–596. https://doi.org/10.1111/cgf.14776 arXiv:2301.05339 [cs].

[41] Norman Di Palo, Arunkumar Byravan, Leonard Hasenclever, Markus Wulfmeier, Nicolas Heess, and Martin Riedmiller. 2023. Towards A Unified Agent with Foundation Models. In *Workshop on Reincarnating Reinforcement Learning at ICLR 2023*. https://openreview.net/forum?id=JK_B1tB6p-

[42] Ethan Perez, Florian Strub, Harm De Vries, Vincent Dumoulin, and Aaron Courville. 2018. Film: Visual reasoning with a general conditioning layer. In *Proceedings of the AAAI conference on artificial intelligence*, Vol. 32.

[43] Khaled Saleh. 2022. Hybrid Seq2Seq Architecture for 3D Co-Speech Gesture Generation. In *INTERNATIONAL CONFERENCE ON MULTIMODAL INTERACTION*. ACM, Bengaluru India, 748–752. https://doi.org/10.1145/3536221.3558064

[44] Noam Shazeer. 2020. GLU Variants Improve Transformer. *CoRR* abs/2002.05202 (2020). arXiv:2002.05202 https://arxiv.org/abs/2002.05202

[45] Mingyang Sun, Mengchen Zhao, Yaqing Hou, Minglei Li, Huang Xu, Songcen Xu, and Jianye Hao. [n. d.]. Co-Speech Gesture Synthesis by Reinforcement Learning With Contrastive Pre-Trained Rewards. ([n. d.]).

[46] Graham W. Taylor and Geoffrey E. Hinton. 2009. Factored conditional restricted Boltzmann Machines for modeling motion style. In *Proceedings of the 26th Annual International Conference on Machine Learning*. ACM, Montreal Quebec Canada, 1025–1032. https://doi.org/10.1145/1553374.1553505

[47] Hugo Touvron, Thibaut Lavril, Gautier Izacard, Xavier Martinet, Marie-Anne Lachaux, Timothée Lacroix, Baptiste Rozière, Naman Goyal, Eric Hambro, Faisal Azhar, Aurelien Rodriguez, Armand Joulin, Edouard Grave, and Guillaume Lample. 2023. LLaMA: Open and Efficient Foundation Language Models. https://doi.org/10.48550/arXiv.2302.13971 arXiv:2302.13971 [cs].

[48] Ashish Vaswani, Noam Shazeer, Niki Parmar, Jakob Uszkoreit, Llion Jones, Aidan N Gomez, Ł ukasz Kaiser, and Illia Polosukhin. 2017. Attention is All you Need. In *Advances in Neural Information Processing Systems*, I. Guyon, U. Von Luxburg, S. Bengio, H. Wallach, R. Fergus, S. Vishwanathan, and R. Garnett (Eds.), Vol. 30. Curran Associates, Inc. https://proceedings.neurips.cc/paper_files/paper/2017/file/3f5ee243547dee91fbd053c1c4a845aa-Paper.pdf

[49] Petra Wagner, Zofia Malisz, and Stefan Kopp. 2014. Gesture and speech in interaction: An overview. *Speech Communication* 57 (Feb. 2014), 209–232. https://doi.org/10.1016/j.specom.2013.09.008

[50] Jonathan Windle, David Greenwood, and Sarah Taylor. 2022. UEA Digital Humans entry to the GENEA Challenge 2022. In *INTERNATIONAL CONFERENCE ON MULTIMODAL INTERACTION*. ACM, Bengaluru India, 771–777. https://doi.org/10.1145/3536221.3558065

[51] Bowen Wu, Chaoran Liu, Carlos T. Ishi, and Hiroshi Ishiguro. 2021. Probabilistic Human-like Gesture Synthesis from Speech using GRU-based WGAN. In *Companion Publication of the 2021 International Conference on Multimodal Interaction*. ACM, Montreal QC Canada, 194–201. https://doi.org/10.1145/3461615.3485407

[52] Jiqing Wu, Zhiwu Huang, Janine Thoma, Dinesh Acharya, and Luc Van Gool. 2018. Wasserstein Divergence for GANs. https://doi.org/10.48550/arXiv.1712.01026 arXiv:1712.01026 [cs].

[53] Sicheng Yang, Zhiyong Wu, Minglei Li, Mengchen Zhao, Jiuxin Lin, Liyang Chen, and Weihong Bao. 2022. The ReprGesture entry to the GENEA Challenge 2022. In *INTERNATIONAL CONFERENCE ON MULTIMODAL INTERACTION*. ACM, Bengaluru India, 758–763. https://doi.org/10.1145/3536221.3558066

[54] Youngwoo Yoon, Bok Cha, Joo-Haeng Lee, Minsu Jang, Jaeyeon Lee, Jaehong Kim, and Geehyuk Lee. 2020. Speech Gesture Generation from the Trimodal Context of Text, Audio, and Speaker Identity. *ACM Transactions on Graphics* 39, 6 (Dec. 2020), 1–16. https://doi.org/10.1145/3414685.3417838 arXiv:2009.02119 [cs].

[55] Youngwoo Yoon, Woo-Ri Ko, Minsu Jang, Jaeyeon Lee, Jaehong Kim, and Geehyuk Lee. 2019. Robots Learn Social Skills: End-to-End Learning of Co-Speech Gesture Generation for Humanoid Robots. In *2019 International Conference on Robotics and Automation (ICRA)*. IEEE, Montreal, QC, Canada, 4303–4309. https://doi.org/10.1109/ICRA.2019.8793720

[56] Youngwoo Yoon, Woo-Ri Ko, Minsu Jang, Jaeyeon Lee, Jaehong Kim, and Geehyuk Lee. 2019. Robots Learn Social Skills: End-to-End Learning of Co-Speech Gesture Generation for Humanoid Robots. In *2019 International Conference on Robotics and Automation (ICRA)*. IEEE, Montreal, QC, Canada, 4303–4309. https://doi.org/10.1109/ICRA.2019.8793720

[57] Youngwoo Yoon, Pieter Wolfert, Taras Kucherenko, Carla Viegas, Teodor Nikolov, Mihail Tsakov, and Gustav Eje Henter. 2022. The GENEA Challenge 2022: A large evaluation of data-driven co-speech gesture generation. In *INTERNATIONAL CONFERENCE ON MULTIMODAL INTERACTION*. ACM, Bengaluru India, 736–747. https://doi.org/10.1145/3536221.3558058

[58] Chi Zhou, Tengyue Bian, and Kang Chen. 2022. GestureMaster: Graph-based Speech-driven Gesture Generation. In *INTERNATIONAL CONFERENCE ON MULTIMODAL INTERACTION*. ACM, Bengaluru India, 764–770. https://doi.org/10.1145/3536221.3558063