LEVERAGING CONSTRAINT LOGIC PROGRAMMING FOR NEURAL GUIDED PROGRAM SYNTHESIS

Lisa Zhang[1,2], Gregory Rosenblatt[4], Ethan Fetaya[1,2], Renjie Liao[1,2,3], William E. Byrd[4], Raquel Urtasun[1,2,3] & Richard Zemel[1,2]
[1]University of Toronto, [2]Vector Institute, [3]Uber ATG, [4]University of Alabama
[1]{lczhang,ethanf,rjliao,urtasun,zemel}@cs.toronto.edu
[4]{gregr,webyrd}@uab.edu

ABSTRACT

We present a method for solving Programming by Example (PBE) problems that tightly integrates a neural network with a constraint logic programming system called miniKanren. Internally, miniKanren searches for a program that satisfies the recursive constraints imposed by the provided examples. Our Recurrent Neural Network (RNN) model uses these constraints as input to score candidate programs. We show evidence that using our method to guide miniKanren's search is a promising approach to solving PBE problems.

1 INTRODUCTION

Programming by Example (PBE) is the problem of synthesizing a program specified in terms of input/output examples. State-of-the-art approaches use symbolic techniques developed by the programming languages community (Feser et al., 2015; Albarghouthi et al., 2013; Osera & Zdancewic, 2015), but success in PBE has been limited to small programs in restricted domain specific languages (DSL). These approaches are difficult to scale due to the exponential search space. Recent approaches by the machine learning community attempt to avoid or alleviate the scaling problem. These approaches include differentiable programming (Neelakantan et al., 2016; Reed & de Freitas, 2016), directly synthesizing a program as a sequence or tree (Devlin et al., 2017; Parisotto et al., 2017), and guiding a symbolic search using a neural model (Kalyan et al., 2018; Balog et al., 2017).

We take the latter approach, but take the integration with a symbolic system even further: we use its internal representations as input. The symbolic system used is called miniKanren[1] (Byrd & Friedman, 2006), chosen for its potential to synthesize recursive programs in dynamically typed languages (Byrd et al., 2017). Internally, miniKanren searches for a program that satisfies the recursive constraints (usually called "goals") imposed by the input/output examples. Our model uses these constraints to score candidate programs and guide miniKanren's search.

Our method is promising for several reasons. First, while symbolic systems have performed better, neural guidance can help navigate exponentially large search spaces, leveraging progress made in both communities. Second, symbolic systems exploit the compositionality of synthesis problems: miniKanren's constraints select portions of the input/output examples relevant to a subproblem. This is akin to having a symbolic attention mechanism. Lastly, it is difficult for neural techniques to synthesize programs larger than those seen in training (Parisotto et al., 2017). Guiding a search and using constraints both alleviate this problem. We present some evidence that our approach is able to generalize to programs larger than those seen in training.

2 MODEL

Our approach, along with integration with miniKanren, is summarized in Figure 1.

Constraint Representation The symbolic system miniKanren is a constraint logic programming language, equipped with a relational interpreter `evalo` of the target DSL. In our case we use a

[1]The name "Kanren" comes from the Japanese word for "relation".

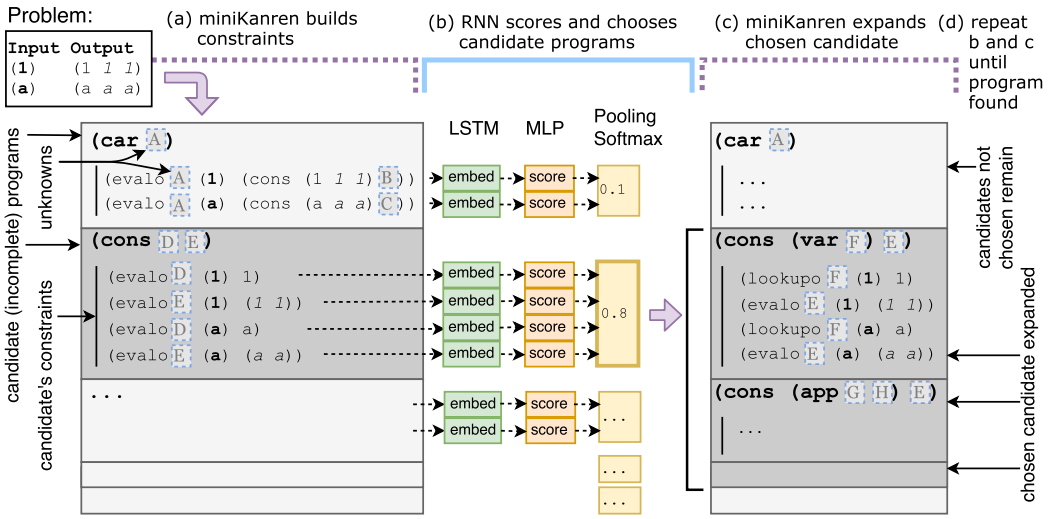

Figure 1: Steps for synthesizing a program that repeats a symbol three times using a subset of Lisp: (a) miniKanren builds constraints representing the search space for the PBE problem; candidate programs contain unknowns, whose values are restricted by constraints; the constraint `(evalo P I O)` is satisfied when an expression `P` with input `I` is evaluated to output `O`; the constraint `(lookupo N E V)` is satisfied when data `E` contains datum `V` at position `N`; in the second candidate, the `evalo` constraints decompose the output into two portions to be synthesized independently; (b) we use an RNN operating on the constraints to score candidates; each constraint is embedded and scored separately, then pooled per candidate; the softmax probability scores determine which candidate to expand; (c) miniKanren expands the chosen candidate `(cons D E)`, so that different completions of unknown `D` are added to the set of candidates; (d) this process of scoring, choosing, and expanding candidates is repeated until a candidate with no unknowns satisfies all constraints imposed by the input/output examples.

dialect of Lisp (Abelson et al., 1996). Here, `evalo` defines a set of recursive constraints (recursive because the constraints may contain other invocations of `evalo`) imposed by the input/output examples. We omit a detailed summary of background work not directly relevant to the machine learning portion of the work, and refer readers to Byrd et al. (2017).

Search The search for a target program is divided into steps. At each step, a candidate incomplete program is chosen and expanded. The default search process used by miniKanren is a biased interleaving search: the search alternates between partial programs, but is biased towards partial programs with more constraints already satisfied. In Byrd et al. (2017), authors present heuristics that improve the search.

Recurrent Neural Network Model We use an RNN with bi-directional Long Short-Term Memory (LSTM) units (Hochreiter & Schmidhuber, 1997) to score candidates. We learn separate RNN weights for each constraint type (`evalo`, `lookupo`, etc). At each step, we embed each constraint using the corresponding LSTM. The embeddings are individually scored using a single scoring function, then the scores are pooled using a combination of mean-pooling and sum-pooling. We softmax over the scores for each candidate program, then make a discrete choice to predict the optimal candidate to expand. In the rest of this work, we refer to our model as RNN-Guided search.

Training We use a small subset of Lisp as our target DSL. This subset consists of `cons`, `car`, `cdr`, along with several constants and function application. We programmatically generate[2] target programs of varying sizes, along with five corresponding input/output pairs. The target program is available during training, and there is a unique optimal candidate that should be selected at each step. We use cross-entropy loss on the softmax probabilities computed across all possible candidate

[2]We run the relational interpreter `evalo` "backwards" to generate arbitrary programs using miniKanren.

programs. We use curriculum learning, beginning with problems with shorter target programs and thus fewer synthesis steps, then gradually allowing larger ones. To reduce training time, we use prioritized experience replay (Schaul et al., 2016) and sample mini-batches from a replay buffer. We use scheduled sampling (Bengio et al., 2015) with a linear schedule, to increase exploration and reduce teacher-forcing as training progresses. Lastly, we choose to expand two candidates per step during training, as it helps reduce cascading errors at test time.

3 EXPERIMENTS

List construction in Lisp We focus on nested list construction as a natural starting point towards expressive computation. We test on 100 problems held out from training, and report the percentage of problems solved within 200 steps. The maximum time the RNN-Guided search used was 11 minutes, so we limit the naive (biased interleaving without heuristics) and heuristic searches to 30 minutes.[3] Results are shown in Table 1A.

Generalization and Comparison In a second set of experiments, we use the same model weights as above to demonstrate generalizability. We synthesize three families of programs of varying complexity: `Repeat(N)` which repeats a token N times, `DropLast(N)` which drops the last element in an N element list, and `BringToFront(N)` which brings the last element to the front in an N element list. As a measure of how synthesis difficulty increases with N, `Repeat(N)` takes $4+3N$ steps, `DropLast(N)` takes $\frac{1}{2}N^2+\frac{5}{2}N+1$ steps, and `BringToFront(N)` takes $\frac{1}{2}N^2+\frac{7}{2}N+4$ steps. The largest training program takes optimally 22 steps to synthesize. The number of optimal steps in synthesis correlates linearly with program size.

We compare against state-of-the-art systems λ^2, Escher, and Myth. All three use type information, which is why we could not compare against them in Table 1A[4] but should provide an advantage in this experiment. Further, λ^2 assumes advanced language constructs like `fold` that other methods do not, and Escher requires an "oracle" to provide outputs for additional inputs. We limit the number of input/output examples to five, and allow every method up to 30 minutes. Our model is further restricted to 200 steps for consistency with the previous section.[5] Results are shown in Table 1B. Our method is able to solve problems much larger than those seen in training, and is competitive in its potential to generalize to larger programs.

Table 1: Synthesis Results. A. Test Problems Solved (%); B. Generalization: largest N for which synthesis succeeded, and failure modes (out of **time**, out of **memory**, requires **oracle**, other **error**)

Method	A. Test	B. Generalization		
	% Solved	Repeat(N)	DropLast(N)	BringToFront(N)
Naive (Byrd et al., 2012)	27%	6 (time)	2 (time)	- (time)
+Heuristics (Byrd et al., 2017)	82%	11 (time)	3 (time)	- (time)
RNN-Guided (Ours)	**99%**	**20+**	**6** (time)	**5** (time)
λ^2 (Feser et al., 2015)		4 (memory)	3 (error)	3 (error)
Escher (Albarghouthi et al., 2013)		10 (error)	1 (oracle)	- (oracle)
Myth (Osera & Zdancewic, 2015)		**20+**[6]	- (error)	- (error)

4 CONCLUSION AND FUTURE WORK

We presented a neural guided synthesis model where the neural guide takes as input the internal constraint encoding of the PBE problem used by miniKanren. We show promising results in the model's ability to generalize to larger problems. The ability to encode recursive problems is available in miniKanren, so learning to guide recursive program synthesis is left as future work.

[3] All test experiments are run on Intel i7-6700 3.40GHz CPU with 16GB RAM.

[4] Problems in Table 1A are dynamically-typed, improper list construction problems

[5] Our model is able to synthesize DropLast(7) and BringToFront(6) if given the full 30 minutes.

[6] Myth solved Repeat(N) much faster than our model, taking <15ms per problem.

REFERENCES

Harold Abelson, Gerald J. Sussman, and Julie Sussman. *Structure and Interpretation of Computer Programs*. MIT Press ; McGraw-Hill, second edition, July 1996. ISBN 0262011530. URL `http://mitpress.mit.edu/sicp/full-text/book/book.html`.

Aws Albarghouthi, Sumit Gulwani, and Zachary Kincaid. Recursive program synthesis. In *International Conference on Computer Aided Verification*, pp. 934–950. Springer, 2013.

Matej Balog, Alexander L. Gaunt, Marc Brockschmidt, Sebastian Nowozin, and Daniel Tarlow. Deepcoder: Learning to write programs. *International Conference on Learning Representations*, 2017.

Samy Bengio, Oriol Vinyals, Navdeep Jaitly, and Noam Shazeer. Scheduled sampling for sequence prediction with recurrent neural networks. In *Advances in Neural Information Processing Systems*, pp. 1171–1179, 2015.

William E. Byrd and Daniel P. Friedman. From variadic functions to variadic relations. In *Proceedings of the 2006 Scheme and Functional Programming Workshop, University of Chicago Technical Report TR-2006-06*, pp. 105–117, 2006.

William E. Byrd, Eric Holk, and Daniel P. Friedman. miniKanren, live and untagged: Quine generation via relational interpreters (programming pearl). In *Proceedings of the 2012 Annual Workshop on Scheme and Functional Programming*, pp. 8–29. ACM, 2012.

William E. Byrd, Michael Ballantyne, Gregory Rosenblatt, and Matthew Might. A unified approach to solving seven programming problems (functional pearl). *Proceedings of the ACM on Programming Languages*, 1(ICFP):8, 2017.

Jacob Devlin, Jonathan Uesato, Surya Bhupatiraju, Rishabh Singh, Abdel rahman Mohamed, and Pushmeet Kohli. RobustFill: Neural program learning under noisy I/O. In Doina Precup and Yee Whye Teh (eds.), *Proceedings of the 34th International Conference on Machine Learning*, volume 70 of *Proceedings of Machine Learning Research*, pp. 990–998, International Convention Centre, Sydney, Australia, 06–11 Aug 2017. PMLR.

John K. Feser, Swarat Chaudhuri, and Isil Dillig. Synthesizing data structure transformations from input-output examples. In *ACM SIGPLAN Notices*, volume 50, pp. 229–239. ACM, 2015.

Sepp Hochreiter and Jürgen Schmidhuber. Long short-term memory. *Neural computation*, 9(8): 1735–1780, 1997.

Ashwin Kalyan, Abhishek Mohta, Oleksandr Polozov, Dhruv Batra, Prateek Jain, and Sumit Gulwani. Neural-guided deductive search for real-time program synthesis from examples. *International Conference on Learning Representations*, 2018.

Arvind Neelakantan, Quoc V. Le, and Ilya Sutskever. Neural programmer: Inducing latent programs with gradient descent. *International Conference on Learning Representations*, 2016.

Peter-Michael Osera and Steve Zdancewic. Type-and-example-directed program synthesis. In *ACM SIGPLAN Notices*, volume 50, pp. 619–630. ACM, 2015.

Emilio Parisotto, Abdel-rahman Mohamed, Rishabh Singh, Lihong Li, Dengyong Zhou, and Pushmeet Kohli. Neuro-symbolic program synthesis. *International Conference on Learning Representations*, 2017.

Scott Reed and Nando de Freitas. Neural programmer-interpreters. *International Conference on Learning Representations*, 2016.

Tom Schaul, John Quan, Ioannis Antonoglou, and David Silver. Prioritized experience replay. *International Conference on Learning Representations*, 2016.