MASKFUSION: FEATURE AUGMENTATION FOR CLICK-THROUGH RATE PREDICTION VIA INPUT-ADAPTIVE MASK FUSION

Anonymous authors
Paper under double-blind review

ABSTRACT

Click-through rate (CTR) prediction plays important role in the advertisement, recommendation, and retrieval applications. Given the feature set, how to fully utilize the information from the feature set is an active topic in deep CTR model designs. There are several existing deep CTR works focusing on feature interactions, feature attentions, and so on. They attempt to capture high-order feature interactions to enhance the generalization ability of deep CTR models. However, these works either suffer from poor high-order feature interaction modeling using DNN or ignore the balance between generalization and memorization during the recommendation. To mitigate these problems, we propose an adaptive feature fusion framework called MaskFusion, to additionally capture the explicit interactions between the input feature and the existing deep part structure of deep CTR models dynamically, besides the common feature interactions proposed in existing works. MaskFusion is an instance-aware feature augmentation method, which makes deep CTR models more personalized by assigning each feature with an instance-adaptive mask and fusing each feature with each hidden state vector in the deep part structure. MaskFusion can also be integrated into any existing deep CTR models flexibly. MaskFusion achieves state-of-the-art (SOTA) performance on all seven benchmarks deep CTR models with three public datasets.

1 INTRODUCTION

Click-through rate (CTR) prediction plays an important role in the field of personalized service. Factorization Machine (FM) Rendle (2010) based models are common solutions in recommendation systems. These methods transform the raw high-dimensional sparse features into low-dimensional dense real-value vectors by embedding techniques, and then enumerate all the possible feature interactions, thus avoiding sophisticated manual feature engineering.

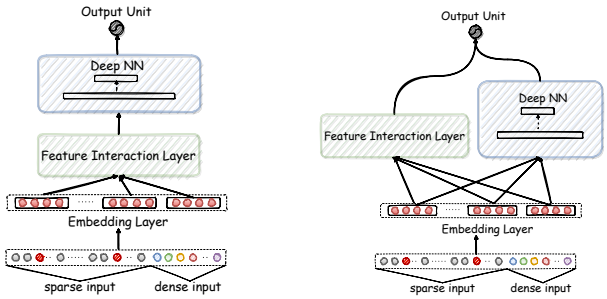

(a) Single tower (b) Dual tower

Figure 1: Deep learning based Click-Through Rate prediction architecture

Recently, deep CTR models, which incorporate explicit feature interactions module with Deep Neural Network (DNN) together, have become a very active research field. As shown in Figure 1, according

to the relative position of DNN and feature interaction layer, the existing deep CTR models can be divided into single tower model and dual tower model Zhang et al. (2021). Single tower models, such as Product-based Neural Network (PNN) Qu et al. (2016), DLRM Naumov et al. (2019) and so on, can capture the high-order feature interactions to a certain degree, due to their architecture complexity. Dual tower models, such as Deep & Cross Network (DCN) Wang et al. (2017), xDeepfm Lian et al. (2018) and so on, treat DNN as a complementary tool to the feature interactions layer.

Both of these two types of deep CTR models utilize the feature interactions layer and the powerful representation ability of DNN to automatically learn high-order feature interactions in explicit and implicit ways, respectively. In fact, these complex structures are designed to address a major challenge in recommendation: **generalization** performance of the CTR models Cheng et al. (2016). For example, the CTR models with strong generalization performance can better explore some feature combinations that have never appeared in historical information, thus recommending new items that users may be interested in.

Currently, some works have attempted to further improve the generalization performance by addressing the problem that DNN is difficult to accurately capture higher-order feature interaction patterns Qu et al. (2018); Rendle et al. (2020). GemNN Fei et al. (2021) introduces a gating mechanism between DNN and the embedding layer of deep CTR models to learn bit-wise feature importance. Features embedding will be fed into DNN after passing through a gating layer instead of being fed into DNN directly. In this way, the DNN can learn more effective feature interaction. MaskNet Wang et al. (2021b) proposed an instance-guided mask, which is generated according to the global information of the instance, to dynamically enhance the informative elements of the hidden states vector by introducing multiplicative operation into DNN. Although these methods optimize the input or hidden states of the deep part in deep CTR models to a certain extent according to the global information of each instance, they did not pay attention to another major challenge in recommendation: the **memorization** ability of the CTR models Cheng et al. (2016). For example, the model can better use the information available in historical data to make relevant recommendations that match user habits, rather than making less relevant recommendations due to over-generalization.

To address the limitation of existing work, we proposed an input-adaptive feature augmentation framework, named MaskFusion, which can incrementally bring non-trivial performance improvements by incorporating with various state-of-the-art deep CTR models flexibly and can be trained in an end-to-end manner. Different from the existing methods, by proposing explicit fusion operations, MaskFusion first enhances the memorization ability of the deep CTR models that previous SOTA CTR models have not paid much attention to enhancing. Second, uses the Mask Controller to make a better trade-off between generalization and memorization. Furthermore, incorporated with MaskFusion, CTR models can make predictions for the input instance by using the instance-wise masks to uniquely enhance each feature of this input instance so that the whole model becomes instance-level personalized during both training and inference. We summarize the contributions below:

- We proposed an input-adaptive feature augmentation framework, named MaskFusion, which can capture the interaction between feature embedding and the deep part structure of deep CTR models adaptively and explicitly. MaskFusion framework is general enough to incorporate with other functionalities like Residual Feature Augmentation in DCNv2 Wang et al. (2021a) and Embedding Dimension Search Shen et al. (2020).
- Instance-aware Mask Controller was proposed to dynamically select the feature that needs to be memorized better for prediction task, according to the characteristics and behaviors of different input instances. Thus, can better balance the memorization and generalization.
- Comprehensive experiments were conducted on 7 benchmarks over 3 real-world datasets, the convincing results demonstrate the effectiveness and robustness of MaskFusion. Hyper-parameters studies demonstrate that MaskFusion is a memory-friendly efficient framework since it achieves better performance with fewer parameters and memories.

2 Related Work

DNN begins to benefit recommendation systems because of its powerful feature representation ability. Many works combine explicit feature interaction with DNN in deep CTR models. PNN Qu et al. (2016) introduces a product layer between embedding and DNN to explicitly learn feature interaction.

DeepFm Guo et al. (2017) combines the power of FM (wide part) for recommendation and DNN (deep part) for feature learning. DLRM Naumov et al. (2019) designs a parallelism scheme for the embedding tables to alleviate the limited memory problem. DCN Wang et al. (2017) proposed a Cross Network to learn certain bounded-degree feature interactions explicitly and combined the results of DNN and Cross Network to predict user behaviors. To improve the limited representation ability of DCN in large-scale industrial settings, DCNv2 Wang et al. (2021a) further replaces the cross vector in Cross Network with a cross matrix to make it more practical in large-scale industrial settings. Similarly, xDeepfm Lian et al. (2018) also learns certain bounded-degree feature interactions explicitly through the proposed Compressed Interaction Network (CIN). In addition to learning all possible feature interactions, AutoFIS Liu et al. (2020) automatically searches for important feature interactions in a continuous space to reduce computation costs and noises caused by excessive feature interactions.

The above deep CTR models simply use DNN to automatically model high-order feature interactions, while there are some other works introducing input-adaptive masks into the models to further augment feature representations. MaskNet Wang et al. (2021b) performs element-wise product both on the feature embedding and hidden states feature vectors in DNN by proposing an instance-guided mask to highlight the important elements. Their intuition is that bringing multiplicative operation into deep CTR models can capture complex feature interaction more efficiently. The similar idea is also proposed in LHUC Swietojanski et al. (2016). Additionally, GemNN Fei et al. (2021) also introduces gating mechanisms to highlight the bit-wise importance of feature embedding before it was fed into DNN. In contrast, although we also adopted the mask mechanism, the motivation and the effect are significantly different from these previous works. We apply the mask to augment the features in our proposed fusion layer for two reasons: First, better balance the memorization ability brought by the Fusion Layer and the strong generalization ability from the deep CTR model. Second, make additional explicit interactions between the masked features and the DNN layers to improve the performance. In addition, MaskFusion can be simply integrated into any state-of-the-art deep CTR models to make improvements, as demonstrated in our extensive experiments, while previous methods did not verify whether their designs for DNN and embedding layer are generally applicable to all existing deep CTR models.

3 METHOD

In this section, we will introduce the proposed framework MaskFusion in detail. We will first briefly introduce the architecture of one common deep CTR model in Section 3.1; then illustrate each component of MaskFusion in Section 3.2.

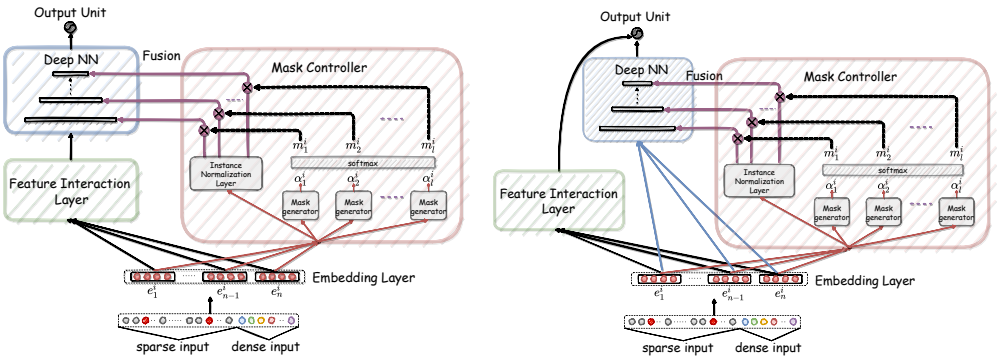

(a) MaskFusion for single tower network (b) MaskFusion for dual tower network

Figure 2: Illustration of MaskFusion framework for common single and dual tower network. Note that MaskFusion can be easily plugged into any existing network.

3.1 DEEP RECOMMENDATION SYSTEM

As illustrated in Figure 1, deep CTR models can be divided into single tower models and dual tower models according to the relative position of *Feature Interaction Layer* and *Deep Neural Network*. *Embedding Layer* embeds the raw feature vectors into a low-dimensional real-value vector. *Feature Interaction Layer* is responsible for capture feature interactions explicitly (such as inner product, outer product, CIN, CNN Liu et al. (2019), etc.) from output of *Embedding Layer*. *Deep Neural Network* is usually responsible for extracting higher-order feature interactions implicitly.

3.2 MASKFUSION

As illustrated in Figure 2, MaskFusion can be integrated with two types of model. MaskFusion contains three main components, *Mask Controller*, *Instance Normalization Layer* and *Fusion layer*. To be specific, *Fusion layer* is mainly used to fuse each feature with each layer in the DNN part, so that each layer of DNN can learn feature interaction explicitly. *Mask Controller* generates unique masks for each instance through the *Mask generator* module to guide the *Fusion layer*, thus enabling an adaptive feature fusion mechanism. *Instance Normalization Layer* module normalizes the features that need to be fused with DNN layers. The details will be described in the following sections.

3.2.1 FUSION LAYER

We firstly introduce Fusion Layer to address the memorization problem which has been described in Section 1. Fusion Layer can enhance the network's memorization, it explicitly fuses the features into each layer of the DNN through the concatenate operation. In this way, different informative features can be memorized better, since it will allow the features to explicitly participate in the forward inference of the CTR models more directly, rather than unexplainable and complicated transformations of features in the DNN. There are some alternatives to fusion operation, for example, element-wise multiplication in MaskNet Wang et al. (2021b) and GemNN Fei et al. (2021), element-wise addition, and so on. These alternatives cannot explicitly let features be fully exposed to the forward-pass likes ours and have poor explainability for which features contribute more to the prediction performance. Specifically, we fuse the embedding vectors $\mathbf{E}$ with each layer of DNN:

$$\mathbf{h}_t = Relu(\mathbf{W}_t \hat{\mathbf{h}}_{t-1} \ + \ \mathbf{b}_t) \tag{1}$$

$$\hat{\mathbf{h}}_t = Concate([\mathbf{E}, \ Relu(\mathbf{W}_t \hat{\mathbf{h}}_{t-1} \ + \ \mathbf{b}_t)]) \tag{2}$$

where $\mathbf{E} \in \mathbb{R}^{n \cdot d}$, n and d denote the number of features fields and the dimension of embedding respectively. $\mathbf{W}_t, \mathbf{b}_t$ denote the weight and the bias of t_{th} fully-connected layer in DNN respectively. $\mathbf{h}_t$ is the output of t_{th} fully-connected layer and $\hat{\mathbf{h}}_{t-1}$ is the input of t_{th} fully-connected layer.

3.2.2 MASK CONTROLLER

The aforementioned Fusion Layer module was introduced to enhance the memorization. However, the design of only Fusion Layer also brings two problems at the same time: First, it just utilizes the same network structure and features to characterize all instances identically and ignores the diverse properties among them. The input instances of the recommendation system in the real world always have diverse convergence behaviors, as demonstrated in Zhao et al. (2021). Second, it only considers enhancing the memorization of the model, but does not avoid weakening the generalization of the model. To tackle these problems, we propose to adopt an input-adaptive Mask Controller to generate masks based on the global information of each instance and apply the masks to the features in the Fusion Layer. This allows the network to autonomously learn which feature should be utilized better in Fusion Layer according to the diverse properties across different instances during training. After training, a larger mask value means that its corresponding feature in the Fusion Layer should be memorized better and we can know which feature contributes more to the CTR prediction, which makes the prediction with explicit explainability. We use this input-adaptive mask in Fusion Layer to make the network adaptively balance the memorization ability and the generalization ability. To be more specific, given an instance, the embedding vector of all fields feature, represented by $\mathbf{E}$, will be firstly multiplied with this generated unique mask before the fusion processing.

Since MaskFusion is a general framework, the mask generator can be composed of any suitable structure, such as SENet Hu et al. (2018), self-attention Vaswani et al. (2017), MLP, and so on. Here,

we simply use MLP as the mask generator for demonstration purposes and our main contribution lies in designing this general and effective framework.

$$\boldsymbol{\alpha}_t^k = MLP_{\boldsymbol{\phi}_t}(\mathbf{E}) \tag{3}$$

where $\boldsymbol{\alpha}_t^k \in \mathbb{R}^n = [\alpha_{t,1}^k, \cdots, \alpha_{t,n}^k]$ is the mask of k_{th} instance generated by the t_{th} mask generator and $\boldsymbol{\phi}_t$ denotes the parameters of the t_{th} mask generator. As illustrated in Fig 2, the total number of mask generators, denoted as l, is equal to the number of layers in DNN.

For the deep part of deep CTR models, embeddings are processed by multiple layers of DNN explicitly, by continuously combining each embedding with other embeddings layer by layer automatically. Thus it can capture potential patterns of the sparse features and will enhance the generalization ability of deep CTR models. After incorporating the Fusion Layer with deep CTR models, feature embeddings are closer to the output layer of DNN and even can directly participate in prediction. As a result, such design not only has a strong generalization ability but also has memorization ability, similar to the wide part design in Cheng et al. (2016). For learning which feature ought to be memorized better automatically and for the purpose of better training convergence, we choose to apply $softmax$ activation functions on all masks to get normalized masks:

$$m_{t,j}^k = \frac{exp(\alpha_{t,j}^k)}{\sum_{t=1}^{l} exp(\alpha_{t,j}^k)}, \ \forall j \in [1, n], \ \forall t \in [1, l] \tag{4}$$

where $\boldsymbol{m}_t^k \in \mathbb{R}^n = [m_{t,1}^k, \cdots, m_{t,n}^k]$ is the mask generated by the t_{th} mask generator from k_{th} instance. Then Eq.(2) will evolve to be:

$$\hat{\mathbf{h}}_t = Concate([\boldsymbol{m}_t^k \mathbf{E}, \ Relu(\mathbf{W}_t \hat{\mathbf{h}}_{t-1} \ + \ \mathbf{b}_t)]) \tag{5}$$

The masks are feature-wisely multiplied with $\mathbf{E}$, thus $\mathbf{E} \in \mathbb{R}^{n \cdot d}$ will be reshaped into $\mathbf{E} \in \mathbb{R}^{n \times d}$ and $\mathbf{E} \in \mathbb{R}^{n \times d}$ will be reshaped back into $\mathbf{E} \in \mathbb{R}^{n \cdot d}$ again before the concatenation.

3.2.3 Instance Normalization Layer

We utilize masks to determine in which layer should the features be fused and how much they will be fused. However, the effect of the mask may become offset by the re-scaling phenomenon. More specially, $m_{t,j}^k \cdot e_j^k$ can produce the same effect as $\frac{m_{t,j}^k}{\varepsilon} \cdot (\varepsilon \cdot e_j^k)$, where ε denotes a real number, for example, a scalar value of the weight in DNN.

To eliminate this re-scaling phenomenon, a natural method is to use normalization techniques. In MaskFusion, each feature needs to be fused into the DNN first and then be adaptively selected by the mask. The information of each dimension in each feature is very important here, we should keep bit-wise information while eliminating the re-scaling. Batch Normalization (BN) and Layer Normalization (LN) do not apply to this scenario, because the calculation of BN counts the information of all instances in a mini-batch and the calculation of LN counts the information of all features in an instance. To address this challenge, we apply Instance Normalization (IN) Ulyanov et al. (2016) on each feature embedding and the IN operation on each feature will be calculated as:

$$IN(\mathbf{e}_j^k) = \boldsymbol{\gamma} \cdot \frac{\mathbf{e}_j^k - \mu_j}{\sqrt{\sigma_j^2 + \epsilon}} + \boldsymbol{\beta} \tag{6}$$

where μ_j and σ_j denote the mean and standard deviation of j_{th} feature of k_{th} instance. Usually, the scale parameter $\boldsymbol{\gamma}$ and shift parameter $\boldsymbol{\beta}$ are set to be trainable to enhance the learning ability of the IN layer. In this paper, we just utilize IN to eliminate the re-scaling phenomenon, so, $\boldsymbol{\gamma}$ and $\boldsymbol{\beta}$ are fixed to 1 and 0 respectively.

End-to-End Training MaskFusion is a framework that can be trained in an end-to-end manner. The optimization process is to minimize the objective loss function which is determined according to different recommendation systems tasks, such as click-through-rate prediction (binary classification), user behavior prediction (multi-class classification), and so on. The parameters of MaskFusion and deep CTR models will be updated simultaneously by stochastic gradient descent optimization.

Finer Granularity version MaskFusion The dimension of the mask in Eq. (4) is equal to the number of embedding vector outputs from the embedding layer, which means that each dimension in

one feature will share the same mask value. We call it Adaptive Feature-wise MaskFusion (Adaptive FwMF). However, in some complex scenes, a finer mask may be required. Thus we design a finer granularity mask: Adaptive Dimension-wise MaskFusion (Adaptive DwMF). The mask generators in Mask Controller will generate a mask $\boldsymbol{m} \in \mathbb{R}^{n \cdot d}$. In this way, each dimension of each embedding vector will own a unique mask value.

4 EXPERIMENTS

In this section, comprehensive experiments are conducted on 7 benchmark models to demonstrate the effectiveness and robustness of the MaskFusion framework over three real-world datasets. Due to the page limitation, we refer the reader to supplementary materials B for the implementation details; C for the validation experiments of the significant improvement; E for the whole hyper-parameter studies; D for the whole ablation studies; F for the plot of the augmentation mask magnitude of the same feature with different input instances in each DNN layer; G for the details of functionalities extension experiments.

4.1 EXPERIMENT SETUP

Datasets. We evaluate the MaskFusion framework on three real-world commercial datasets: *Criteo*, *Terabyte*, and *Avazu*. Due to the page limitation, more details on dataset processing are listed in supplementary materials B

Evaluation Metrics. We conduct binary classification (i.e., Click-Through prediction) on above three datasets and adopt *AUC* and *Logloss* metrics to evaluate all models. Note that an improvement of AUC at 0.001 level will be regarded as a considerable improvement, as also claimed in Zhu et al. (2021); Wang et al. (2021b).

Baseline Models. We choose 7 baseline models: IPNN Qu et al. (2016), DeepFm Guo et al. (2017), DCN Wang et al. (2017), xDeepFm Lian et al. (2018), Autoint+ Song et al. (2019), DCN V2 Wang et al. (2021a) and DLRM Naumov et al. (2019). These deep CTR models have various feature interaction layers as described in Section 3.1 and they can be divided into single-tower and dual-tower models. We deploy MaskFusion to these baseline models to show its effectiveness.

Table 1: The comparisons between the baseline models and two versions of MaskFusion models (Feature-wise and Dimension-wise).

Model		Criteo		Terabyte		Avazu		Model Type
		AUC↑	Logloss↓	AUC↑	Logloss↓	AUC↑	Logloss↓	
IPNN	Baseline	0.8073	0.4483	0.7974	0.4188	0.8118	0.3600	Single Tower
	Adaptive FwMF	**0.8085**	0.4472	0.7984	0.4180	0.8146	0.3581	
	Adaptive DwMF	0.8083	0.4475	**0.7991**	0.4176	**0.8179**	0.3564	
DeepFm	Baseline	0.8042	0.4512	0.7953	0.4205	0.8091	0.3623	Single Tower
	Adaptive FwMF	0.8054	0.4500	0.7967	0.4194	0.8149	0.3579	
	Adaptive DwMF	**0.8063**	0.4493	**0.7976**	0.4187	**0.8181**	0.3562	
DCN	Baseline	0.8046	0.4506	0.7964	0.4197	0.8053	0.3641	Dual Tower
	Adaptive FwMF	0.8075	0.4480	0.7976	0.4186	0.8144	0.3583	
	Adaptive DwMF	**0.8085**	0.4471	**0.7985**	0.4181	**0.8167**	0.3573	
xDeepFm	Baseline	0.8067	0.4489	0.7972	0.4190	0.8144	0.3584	Dual Tower
	Adaptive FwMF	0.8080	0.4477	0.7983	0.4181	0.8178	0.3506	
	Adaptive DwMF	**0.8081**	0.4475	**0.7990**	0.4180	**0.8189**	0.3559	
Autoint+	Baseline	0.8058	0.4496	0.7968	0.4205	0.8086	0.3621	Single Tower
	Adaptive FwMF	0.8073	0.4478	0.7983	0.4183	0.8141	0.3581	
	Adaptive DwMF	**0.8089**	0.4467	**0.7989**	0.4179	**0.8174**	0.3562	
DCN V2	Baseline	0.8084	0.4475	0.7981	0.4183	0.8082	0.3623	Dual Tower
	Adaptive FwMF	**0.8098**	0.4462	**0.7991**	0.4175	0.8143	0.3579	
	Adaptive DwMF	0.8091	0.4466	0.7990	0.4175	**0.8175**	0.3567	
DLRM	Baseline	0.8085	0.4469	0.7977	0.4185	0.8145	0.3592	Single Tower
	Adaptive FwMF	0.8098	0.4459	0.7992	0.4174	0.8171	0.3570	
	Adaptive DwMF	**0.8101**	0.4456	**0.7996**	0.4171	**0.8186**	0.3555	

4.2 PERFORMANCE COMPARISONS

Table 1 summarizes the overall performance of all models. It can be observed that: For all cases in the table, when applying MaskFusion on baseline models, it consistently outperforms the original baseline models over three datasets, no matter whether the model architecture is a single tower or dual tower. It is worth noting that the gap of AUC between different baseline models is very small (even at 0.0001 level), thus **an improvement of AUC at 0.001 level can be considered significant, as claimed in Zhu et al. (2021)**. Compare to the best baseline models DLRM, the relative AUC improvement from DLRM with Adaptive FwMF on Criteo and Avazu is 0.11%, 0.41% respectively. Especially, even on large-scale datasets Terabyte, which consists of 500 million instances, the DLRM model with Adaptive FwMF still outperforms the baseline DLRM model by 0.19% in terms of AUC. Adaptive DwMF realizes feature fusion with a finer-grained adaptive mask manner than Adaptive FwMF. The experimental results show that Adaptive DwMF outperforms Adaptive FwMF for most cases and indeed consistently outperforms overall baseline models.

To summarize, both types of MaskFusion can surpass the baseline models in terms of AUC, which verifies the superiority and the robustness of the proposed MaskFusion framework, in terms of consistently enhancing the deep CTR models containing various features interaction manners and various model architectures.

4.3 ABLATION STUDIES

To give a deeper understanding of different components of MaskFusion, we perform the ablation studies by gradually adding each component of MaskFusion onto baseline models: **Fusion Layer:** All of the features will be fused to each layer of DNN directly. **Feature-wise Mask:** All of the features will be multiplied by a mask $\boldsymbol{\beta} \in \mathbb{R}^{l \times n}$ before being fused to DNN. This mask is initialized at the beginning of training instead of being generated by our mask controller, thus all instances will share the same mask $\boldsymbol{\beta}$. The mask will be updated during the training process. **Adaptive:** All of the features will be multiplied by a mask before being fused to DNN and the mask will be generated by a mask controller adaptively over the input instance.

We only show the experimental results of three models Autoint+, DCN, and DLRM due to the page limitation, we refer the reader to supplementary materials D for complete experiments and analysis. The overall performance is shown in Table 2 and we have the following observations:

First, with only *Fusion Layer* added to the baseline, the performances on Criteo and Avazu are even degraded (for DCN, it outperforms the baseline by 0.05% on Criteo in terms of AUC, but it is not significant). On Terabyte, the performance is similar to the baseline. This phenomenon is reasonable, the Fusion Layer is designed to explicitly enhance the network's memorization ability to remember feature combinations that have appeared in historical information **(memorization is better)**. But at the same time, this may also make the network more difficult to make a recommendation if the input feature combinations have never appeared before (**generalization may be worse**).

Table 2: Ablation study. Based on the baseline (BL), Fusion (Fu), Feature-wise Mask (FwM), and Adaptive (Ada) are gradually added for ablation studies. ↑ means higher is better and ↓ means lower is better.

Model					Criteo		Terabyte		Avazu	
	BL	Fu	FwM	Ada	AUC↑	Logloss↓	AUC↑	Logloss↓	AUC↑	Logloss↓
DCN	✓				0.8046	0.4506	0.7964	0.4197	0.8053	0.3641
		✓			0.8051	0.4503	0.7964	0.4196	0.8046	0.3650
		✓	✓		0.8050	0.4503	0.7959	0.4199	0.8062	0.3639
		✓	✓	✓	**0.8075**	0.4480	**0.7976**	0.4186	**0.8144**	0.3583
Autoint+	✓				0.8058	0.4496	0.7968	0.4205	0.8086	0.3621
		✓			0.8048	0.4505	0.7967	0.4194	0.8072	0.3631
		✓	✓		0.8044	0.4509	0.7969	0.4191	0.8074	0.3630
		✓	✓	✓	**0.8073**	0.4478	**0.7983**	0.4183	**0.8141**	0.3581
DLRM	✓				0.8085	0.4469	0.7977	0.4185	0.8145	0.3592
		✓			0.8080	0.4475	0.7980	0.4183	0.8085	0.3624
		✓	✓		0.8086	0.4470	0.7983	0.4181	0.8104	0.3611
		✓	✓	✓	**0.8098**	0.4459	**0.7992**	0.4174	**0.8171**	0.3570

Secondly, with both *Fusion Layer* and *Feature-wise Mask* added into the baseline, the performance is slightly improved compared to the first case, which with only *Fusion Layer* in the baseline. This phenomenon demonstrates that the masked features did help solve the generalization problem, however, to a certain degree. We further attribute the reason for small improvements of test AUC to the mask with fixed values. Even though the mask value is updated according to the training data during training, for a mini-batch, all instances in the batch still share the same mask, which is not optimal in CTR prediction scenarios. In industrial scenarios, there are hundreds of millions of users, and each user has different preferences, which also means that the CTR model needs to be more personalized.

Thirdly, with all components incorporated into baseline, each instance has a unique instance-dependent mask to determine which features should be memorized better for this instance in the Fusion Layer. As expected, this option (called Adaptive FwMF) comprehensively significantly improves all seven baselines on three datasets.

4.4 Hyper-parameter Studies

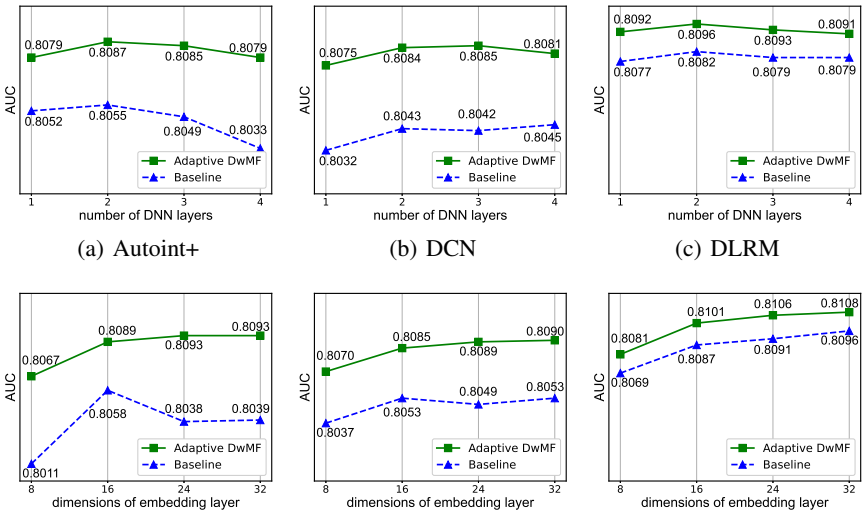

(a) Autoint+ (b) DCN (c) DLRM

(d) Autoint+ (e) DCN (f) DLRM

Figure 3: The performance comparison in terms of the number of DNN layers and the embedding layer dimensions on Criteo dataset

We study how the hyper-parameters impact the performance of DRS models integrated with MaskFusion. We mainly focus on two hyper-parameters: the number of DNN layers and the dimension of the embedding layer. In industrial scenarios, the former mainly affects the inference speed of Deep CTR models, while the latter mainly affects the saving memory of Deep CTR models.

Number of DNN Layers. The complexity of the DNN model will increase as the number of layers increases. From Figure 3(a) to 3(c) we can observe: For the baseline model, the performance will increase with the depth of DNN and then will degrade because of overfitting. However, the performance of the models incorporated with Adaptive DwMF has smoother improvements as the DNN depth increases. Meanwhile, the models incorporated with Adaptive DwMF always outperform the baseline as the number of layers increases. This phenomenon demonstrates the effectiveness and robustness of the MaskFusion framework.

Dimension of embedding layer. Figure 3(d) to 3(f) show the impact of the dimension of embedding layer. The performances of all three baseline models with the larger dimension will increase at the beginning. However, except for DLRM, the performance of DCN and Autoint+ will degrade when the dimension becomes larger than 16 and 24 respectively. For models incorporated with Adaptive DwMF, their performances not only consistently outperform the corresponding baseline models but also are continuously improved as the dimension increases from 8 to 32. We attribute

this phenomenon to MaskFusion making full use of the low-dimensional dense representation of features: the dynamic interaction mechanism between feature embeddings and DNN structure can enable better embedding table training.

To summarize, MaskFusion shows its effectiveness and robustness over the different hyper-parameters settings. Especially, from the results of Figure 3, we can observe that the models incorporated with MaskFusion under shallower DNN or smaller embedding dimensions scenario can outperform the baseline models that have deeper DNN or larger embedding dimensions setting. **For example, DLRM incorporated with Adaptive DwMF with the embedding dimension value 8 can still outperform the baseline model with the embedding dimension 32 by a non-trivial improvement: 0.06%**. This means that the MaskFusion framework can also be a memory-friendly framework. Numerical features in commercial recommendation systems inevitably lead to huge embedding tables, if the embeddings can be represented only by an 8-dimensional vector, it will save 75% memory consumption compared to a 32-dimensional embedding representation.

4.5 Functionalities Extension

MaskFusion meets Embedding Dimension Reduction. As a general and easy-to-integrate framework, MaskFusion can be combined with many other methods, such as feature selection Ma et al. (2021); Shen et al. (2020), feature dimension search Shen et al. (2020), etc. Without losing generalization, we choose the smoothed-L0 gate used in Guo et al. (2021), to prune the dimensions of the fused features and reduce the inference latency time. Smoothed-L0 gate is defined as $g(\mathbf{x}) = \frac{\mathbf{x}^2}{\mathbf{x}^2+\epsilon}$, where $\mathbf{x} \in \mathbb{R}^{n \cdot d}$, n is feature number and d is feature dimension. During the training process, the corresponding dimension where $g(\mathbf{x})$ becomes exactly 0 will be pruned from this feature. Table 3 shows that the SmoothL0 FwMF method consistently outperforms all baseline models. More experimental details and analysis are in the supplementary material G.

Table 3: The comparisons between the baseline models and SmoothL0 FwMF models. (sparsity: reduce-ratio of parameter number of fused features)

Model		Criteo			Avazu		
		AUC↑	Logloss↓	sparsity	AUC↑	Logloss↓	sparsity
DCN	Baseline	0.8046	0.4506	-/-	0.8053	0.3641	-/-
	SmoothL0 FwMF	**0.8073**	0.4482	58%	**0.8144**	0.3584	56%
Autoint+	Baseline	0.8058	0.4496	-/-	0.8086	0.3621	-/-
	SmoothL0 FwMF	**0.8072**	0.4484	39%	**0.8125**	0.3594	54%
DLRM	Baseline	0.8085	0.4469	-/-	0.8145	0.3592	-/-
	SmoothL0 FwMF	**0.8097**	0.4461	51%	**0.8170**	0.3575	27%

MaskFusion meets DCNv2-type Mask Controller. MaskFusion is not limited to a specific augmentation way, besides the aforementioned MLP, it welcomes any other methods to generate masks to augment features. Here, we use DCNv2 as the Mask Controller role of the MaskFusion framework for illustration, as shown in the supplementary material G.

5 Conclusions

In this paper, we proposed an input-adaptive feature augmentation framework, MaskFusion, which can be incorporated with any existing deep CTR models flexibly and enhances their performance stably. In the MaskFusion framework, feature embedding will be multiplied by a mask and then fused to the deep part of deep CTR models through the concatenation operation, so that the DNN can explicitly learn the feature interactions , and the memorization ability of the deep CTR models will also be enhanced effectively. We also proposed a Mask Controller to learn which feature should be memorized better dynamically according to different input instances, thereby making a better trade-off between memorization and generalization automatically.. Experiments on 3 real-world datasets and 7 SOTA Deep CTR models demonstrate the effectiveness. Additionally, a hyper-parameters study shows that MaskFusion has the potential to be a memory-friendly framework since it can achieve better performance with fewer parameters. In the future, we will further explore more efficient and effective dynamic feature augmentation framework designs.

REFERENCES

Heng-Tze Cheng, Levent Koc, Jeremiah Harmsen, Tal Shaked, Tushar Chandra, Hrishi Aradhye, Glen Anderson, Greg Corrado, Wei Chai, Mustafa Ispir, Rohan Anil, Zakaria Haque, Lichan Hong, Vihan Jain, Xiaobing Liu, and Hemal Shah. Wide & deep learning for recommender systems. In *Proceedings of the 1st Workshop on Deep Learning for Recommender Systems*, DLRS 2016, pp. 7–10, New York, NY, USA, 2016. Association for Computing Machinery. ISBN 9781450347952. doi: 10.1145/2988450.2988454. URL https://doi.org/10.1145/2988450.2988454.

John Duchi, Elad Hazan, and Yoram Singer. Adaptive subgradient methods for online learning and stochastic optimization. *Journal of machine learning research*, 12(7), 2011.

Hongliang Fei, Jingyuan Zhang, Xingxuan Zhou, Junhao Zhao, Xinyang Qi, and Ping Li. *GemNN: Gating-Enhanced Multi-Task Neural Networks with Feature Interaction Learning for CTR Prediction*, pp. 2166–2171. Association for Computing Machinery, New York, NY, USA, 2021. ISBN 9781450380379. URL https://doi.org/10.1145/3404835.3463116.

Huifeng Guo, Ruiming Tang, Yunming Ye, Zhenguo Li, and Xiuqiang He. Deepfm: A factorization-machine based neural network for ctr prediction. In *Proceedings of the 26th International Joint Conference on Artificial Intelligence*, IJCAI'17, pp. 1725–1731. AAAI Press, 2017. ISBN 9780999241103.

Yi Guo, Huan Yuan, Jianchao Tan, Zhangyang Wang, Sen Yang, and Ji Liu. Gdp: Stabilized neural network pruning via gates with differentiable polarization. In *Proceedings of the IEEE/CVF International Conference on Computer Vision*, pp. 5239–5250, 2021.

Jie Hu, Li Shen, and Gang Sun. Squeeze-and-excitation networks. In *Proceedings of the IEEE conference on computer vision and pattern recognition*, pp. 7132–7141, 2018.

Jianxun Lian, Xiaohuan Zhou, Fuzheng Zhang, Zhongxia Chen, Xing Xie, and Guangzhong Sun. Xdeepfm: Combining explicit and implicit feature interactions for recommender systems. In *Proceedings of the 24th ACM SIGKDD International Conference on Knowledge Discovery & Data Mining*, KDD '18, pp. 1754–1763, New York, NY, USA, 2018. Association for Computing Machinery. ISBN 9781450355520. doi: 10.1145/3219819.3220023. URL https://doi.org/10.1145/3219819.3220023.

Bin Liu, Ruiming Tang, Yingzhi Chen, Jinkai Yu, Huifeng Guo, and Yuzhou Zhang. Feature generation by convolutional neural network for click-through rate prediction. In *The World Wide Web Conference*, WWW '19, pp. 1119–1129, New York, NY, USA, 2019. Association for Computing Machinery. ISBN 9781450366748. doi: 10.1145/3308558.3313497. URL https://doi.org/10.1145/3308558.3313497.

Bin Liu, Chenxu Zhu, Guilin Li, Weinan Zhang, Jincai Lai, Ruiming Tang, Xiuqiang He, Zhenguo Li, and Yong Yu. *AutoFIS: Automatic Feature Interaction Selection in Factorization Models for Click-Through Rate Prediction*, pp. 2636–2645. Association for Computing Machinery, 2020. ISBN 9781450379984.

Xu Ma, Pengjie Wang, Hui Zhao, Shaoguo Liu, Chuhan Zhao, Wei Lin, Kuang-Chih Lee, Jian Xu, and Bo Zheng. Towards a better tradeoff between effectiveness and efficiency in pre-ranking: A learnable feature selection based approach. In *Proceedings of the 44th International ACM SIGIR Conference on Research and Development in Information Retrieval*, pp. 2036–2040, 2021.

Maxim Naumov, Dheevatsa Mudigere, Hao-Jun Michael Shi, Jianyu Huang, Narayanan Sundaraman, Jongsoo Park, Xiaodong Wang, Udit Gupta, Carole-Jean Wu, Alisson G Azzolini, et al. Deep learning recommendation model for personalization and recommendation systems. *arXiv preprint arXiv:1906.00091*, 2019.

Yanru Qu, Han Cai, Kan Ren, Weinan Zhang, Yong Yu, Ying Wen, and Jun Wang. Product-based neural networks for user response prediction. In *2016 IEEE 16th International Conference on Data Mining (ICDM)*, pp. 1149–1154. IEEE, 2016.

Yanru Qu, Bohui Fang, Weinan Zhang, Ruiming Tang, Minzhe Niu, Huifeng Guo, Yong Yu, and Xiuqiang He. Product-based neural networks for user response prediction over multi-field categorical data. *ACM Trans. Inf. Syst.*, 37(1), oct 2018. ISSN 1046-8188. doi: 10.1145/3233770. URL https://doi.org/10.1145/3233770.

Steffen Rendle. Factorization machines. In *2010 IEEE International conference on data mining*, pp. 995–1000. IEEE, 2010.

Steffen Rendle, Walid Krichene, Li Zhang, and John Anderson. Neural collaborative filtering vs. matrix factorization revisited. In *Fourteenth ACM Conference on Recommender Systems*, RecSys '20, pp. 240–248, New York, NY, USA, 2020. Association for Computing Machinery. ISBN 9781450375832. doi: 10.1145/3383313.3412488. URL https://doi.org/10.1145/3383313.3412488.

Herbert Robbins and Sutton Monro. A stochastic approximation method. *The annals of mathematical statistics*, pp. 400–407, 1951.

Jiayi Shen, Haotao Wang, Shupeng Gui, Jianchao Tan, Zhangyang Wang, and Ji Liu. Umec: Unified model and embedding compression for efficient recommendation systems. In *International Conference on Learning Representations*, 2020.

Weiping Song, Chence Shi, Zhiping Xiao, Zhijian Duan, Yewen Xu, Ming Zhang, and Jian Tang. Autoint: Automatic feature interaction learning via self-attentive neural networks. In *Proceedings of the 28th ACM International Conference on Information and Knowledge Management*, CIKM '19, pp. 1161–1170, New York, NY, USA, 2019. Association for Computing Machinery. ISBN 9781450369763. doi: 10.1145/3357384.3357925. URL https://doi.org/10.1145/3357384.3357925.

Pawel Swietojanski, Jinyu Li, and Steve Renals. Learning hidden unit contributions for unsupervised acoustic model adaptation. *IEEE/ACM Transactions on Audio, Speech, and Language Processing*, 24(8):1450–1463, 2016.

Dmitry Ulyanov, Andrea Vedaldi, and Victor Lempitsky. Instance normalization: The missing ingredient for fast stylization. *arXiv preprint arXiv:1607.08022*, 2016.

Ashish Vaswani, Noam Shazeer, Niki Parmar, Jakob Uszkoreit, Llion Jones, Aidan N Gomez, Ł ukasz Kaiser, and Illia Polosukhin. Attention is all you need. In I. Guyon, U. V. Luxburg, S. Bengio, H. Wallach, R. Fergus, S. Vishwanathan, and R. Garnett (eds.), *Advances in Neural Information Processing Systems*, volume 30. Curran Associates, Inc., 2017. URL https://proceedings.neurips.cc/paper/2017/file/3f5ee243547dee91fbd053c1c4a845aa-Paper.pdf.

Ruoxi Wang, Bin Fu, Gang Fu, and Mingliang Wang. Deep & cross network for ad click predictions. In *Proceedings of the ADKDD'17*, ADKDD'17, New York, NY, USA, 2017. Association for Computing Machinery. ISBN 9781450351942. doi: 10.1145/3124749.3124754. URL https://doi.org/10.1145/3124749.3124754.

Ruoxi Wang, Rakesh Shivanna, Derek Cheng, Sagar Jain, Dong Lin, Lichan Hong, and Ed Chi. Dcn v2: Improved deep & cross network and practical lessons for web-scale learning to rank systems. In *Proceedings of the Web Conference 2021*, pp. 1785–1797, 2021a. ISBN 9781450383127.

Zhiqiang Wang, Qingyun She, and Junlin Zhang. Masknet: Introducing feature-wise multiplication to ctr ranking models by instance-guided mask. *arXiv preprint arXiv:2102.07619*, 2021b.

Weinan Zhang, Jiarui Qin, Wei Guo, Ruiming Tang, and Xiuqiang He. Deep learning for click-through rate estimation. *arXiv preprint arXiv:2104.10584*, 2021.

Xiangyu Zhao, Haochen Liu, Wenqi Fan, Hui Liu, Jiliang Tang, and Chong Wang. Autoloss: Automated loss function search in recommendations. In *Proceedings of the 27th ACM SIGKDD Conference on Knowledge Discovery & Data Mining*, KDD '21, pp. 3959–3967, New York, NY, USA, 2021. Association for Computing Machinery. ISBN 9781450383325. doi: 10.1145/3447548.3467208. URL https://doi.org/10.1145/3447548.3467208.

Jieming Zhu, Jinyang Liu, Shuai Yang, Qi Zhang, and Xiuqiang He. *Open Benchmarking for Click-Through Rate Prediction*, pp. 2759–2769. Association for Computing Machinery, New York, NY, USA, 2021. ISBN 9781450384469. URL https://doi.org/10.1145/3459637.3482486.

A OVERVIEW

Due to page limitations, some experimental results and analyses are presented in the supplementary material. We first show implementation details to help readers better reproduce the experimental results in Section B; then, we provide additional results of ablation experiments and hyper-parameter experiments in Section D and Section E respectively, and give more analysis on those; Furthermore, we also provide the comparisons in terms of the number of parameters and the latency in Section E; Next, in Section F we show the plot of each augmentation mask magnitude of each feature field from different input instances in each DNN layer. Finally, we detail how the functionalities extension experiments were performed in Section G.

B IMPLEMENTATION DETAILS

Datasets. For fairer comparison and better reproducibility, we adopted the same datasets processing schedule as Naumov et al. (2019). *Criteo*[1] consists of almost 45 million instances over 7 days of data and each instance contains 13 numerical features and 26 categorical features. In experiments, the first 6 days' data are used as a training set and the rest as the test set. *Terabyte*[2], a more challenging dataset, consists of almost 500 million instances over 24 days of data, and each instance contains 13 numerical features and 26 categorical features. In experiments, the first 23 days of data are used as a training set, and the last day of data as the test set. *Avazu*[3] consists of almost 40 million instances and each instance contains 23 numerical features. Note that, we remove the *sample_id* field since it is useless for the prediction. Then, the dataset is randomly split by 8:1:1 for training, validating, and testing.

Training Hyper-parameters. For a fair comparison, the Deep CTR models integrated with the MaskFusion framework will share the same settings as the baseline models. For numerical features, all of them will be concatenated and transformed into a low dimensional, dense real-value vector by a 4-layers MLP, the number of neurons is [512, 256, 64, 16]. For categorical features, we will embed them into a dense real-value vector with a fixed dimension of 16. For optimization, we utilize an Adagrad optimizer Duchi et al. (2011) with a learning rate of 0.01, and the mini-batch size is 128. The depth of DNN is 3 for all models and the number of neurons is [512, 256, 1]. We simply use the MLP structure as the mask generator, and the structure of each mask generator is [512, 256]. All experiments are conducted on one 2080Ti GPU.

C TEN INDEPENDENT EXPERIMENTS WITH DIFFERENT SEED

We have pointed out in Section 4 that MaskFusion can significantly improve performance (an improvement of AUC at 0.001 level can be considered significant). We conduct additional experiments on three models (DLRM, DCN, and Autoint+) to support this claim. We report the mean and standard deviation of AUC for 10 independent runs with different seeds in Table 4. It can be observed that when applying our MaskFusion on these baseline models, it indeed consistently outperforms the

[1]https://www.kaggle.com/c/criteo-display-ad-challenge

[2]https://labs.criteo.com/2013/12/download-terabyte-click-logs/

[3]http://www.kaggle.com/c/avazu-ctr-prediction

Table 4: The mean and standard deviation of AUC for 10 independent runs with different seeds.

	Criteo AUC	Criteo Logloss
DCN Baseline	$0.80463 \pm 2.0e^{-4}$	$0.45067 \pm 1.3e^{-4}$
DCN Adaptive DwMF	$0.80855 \pm 1.9e^{-4}$	$0.44709 \pm 1.7e^{-4}$
Autoint+ Baseline	$0.80589 \pm 1.1e^{-4}$	$0.44964 \pm 2.1e^{-4}$
Autoint+ Adaptive DwMF	$0.80889 \pm 9.8e^{-5}$	$0.44682 \pm 2.5e^{-4}$
DLRM Baseline	$0.80858 \pm 1.6e^{-4}$	$0.44691 \pm 1.1e^{-4}$
DLRM Adaptive DwMF	$0.81012 \pm 1.4e^{-4}$	$0.44562 \pm 2.1e^{-4}$

original baseline models over three datasets. Specifically, mean improvements range from $1.6e^{-3}$ to $3.9e^{-3}$, and the standard deviations range from $9.8e^{-5}$ to $1.9e^{-4}$. The deviations are significantly smaller than the mean improvements, which demonstrates our improvements are robustly significant.

D More Ablation Studies

As illustrated in Table 5, we conduct ablation studies on four additional baseline models, including IPNN Qu et al. (2016), DeepFm Guo et al. (2017), xDeepFm Lian et al. (2018) and DCN V2 Wang et al. (2021a). A similar conclusion can be drawn that each component of MaskFusion is indispensable and we can achieve the best performance when combining all of them.

Table 5: More ablation study. Based on baseline (BL), Fusion (Fu), Feature-wise Mask (FwM), and Adaptive (Ad) are gradually added for ablation studies. ↑ means higher is better, ↓ means lower is better.

Model					Criteo		Terabyte		Avazu	
	BL	Fu	FwM	Ad	AUC↑	Logloss↓	AUC↑	Logloss↓	AUC↑	Logloss↓
IPNN	✓				0.8073	0.4483	0.7974	0.4188	0.8118	0.3600
		✓			0.8075	0.4480	0.7978	0.4184	0.8086	0.3631
		✓	✓		0.8080	0.4476	0.7976	0.4187	0.8116	0.3614
		✓	✓	✓	**0.8085**	0.4472	**0.7984**	0.4180	**0.8146**	0.3581
DeepFm	✓				0.8042	0.4512	0.7953	0.4205	0.8091	0.3623
		✓			0.8042	0.4511	0.7955	0.4204	0.8083	0.3630
		✓	✓		0.8044	0.4510	0.7954	0.4206	0.8100	0.3622
		✓	✓	✓	**0.8054**	0.4500	**0.7967**	0.4194	**0.8149**	0.3579
xDeepFm	✓				0.8067	0.4489	0.7972	0.4190	0.8144	0.3584
		✓			0.8069	0.4487	0.7973	0.4190	0.8134	0.3595
		✓	✓		0.8072	0.4484	0.7974	0.4186	0.8129	0.3607
		✓	✓	✓	**0.8080**	0.4477	**0.7983**	0.4181	**0.8178**	0.3506
DCNv2	✓				0.8084	0.4475	0.7981	0.4183	0.8082	0.3623
		✓			0.8090	0.4467	0.7986	0.4177	0.8079	0.3630
		✓	✓		0.8093	0.4464	0.7986	0.4178	0.8075	0.3632
		✓	✓	✓	**0.8098**	0.4462	**0.7991**	0.4175	**0.8143**	0.3579

In Section. 4.3, we conclude: Fusion Layer is designed to explicitly enhance the network memorization ability to remember feature combinations that have appeared in historical information (memorization is better). But at the same time, this may also make the network more difficult to recommend based on feature combinations that have never appeared before (generalization may be worse). Here, to better support our claim, we provide the training loss and test loss of the baseline model and the baseline model integrated with the Fusion Layer during the training process. As shown in Table. 6, with only the Fusion layer added to the baseline, the training loss is significantly reduced compared to the baseline model (memorization ability on training data is better). However, there are no corresponding reductions for testing loss (generalization ability on test data is not improved, sometimes worse).

Table 6: The training loss and test loss of the baseline model with and without the Fusion Layer.

	Criteo training loss	Criteo test loss
DCN Baseline	0.4451	0.4506
DCN+Fusion Layer	0.4439	0.4503
Autoint Baseline	0.4447	0.4496
Autoint+Fusion Layer	0.4443	0.4505
DLRM Baseline	0.4434	0.4469
DLRM+Fusion Layer	0.4425	0.4475

E MORE HYPER-PARAMETERS STUDIES

E.1 MORE EXPERIMENTS

In Section. 4.4, we conduct experiments on the *Criteo*[4] dataset to demonstrate how the number of DNN layers and the dimension of the embedding layer affect the performance of MaskFuison. Here, to better demonstrate the robustness and effectiveness of MaskFusion, we provide hyper-parameter experiment result on two other datasets, *Avazu*[5] and *Terabyte*[6].

From Figure 4 to Figure 7, we can draw similar conclusions as in Section 4.4: for the baseline model, increasing the model complexity (increasing the number of layers of the DNN or increasing the dimension of the DNN) does not always bring performance improvements to the model; however, there is a smoother improvement in the performance of the model incorporated with MaskFusion as the model complexity increases.

The above phenomenon is more obvious in *Terabyte*, which is a much larger dataset than *Criteo* and *Avazu*. As we know, on very large datasets, larger models tend to perform better, however, the baseline models in Figure 4 and Figure 6 do not have a similar phenomenon. We argue the reasons are as follows: Simply increasing the network depth may increase the generalization ability of the network. However, the CTR prediction of recommendation scenarios not only requires a strong generalization ability but also needs to be able to make personalized recommendations according to different users' behavior Cheng et al. (2016); Wang et al. (2021b). **This requires the model to take into account both memorization and generalization capabilities, the MaskFusion framework can bring the "input-adaptive" attribute to the model, allowing the model to automatically balance generalization and memorization ability.**

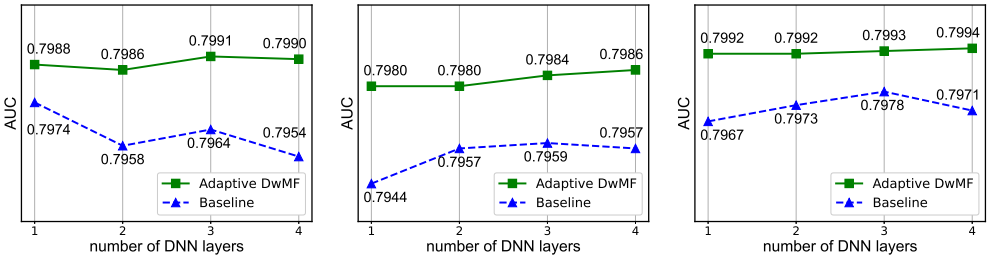

(a) Autoint+ (b) DCN (c) DLRM

Figure 4: The performance comparison in terms of the number of layers on Terabyte dataset

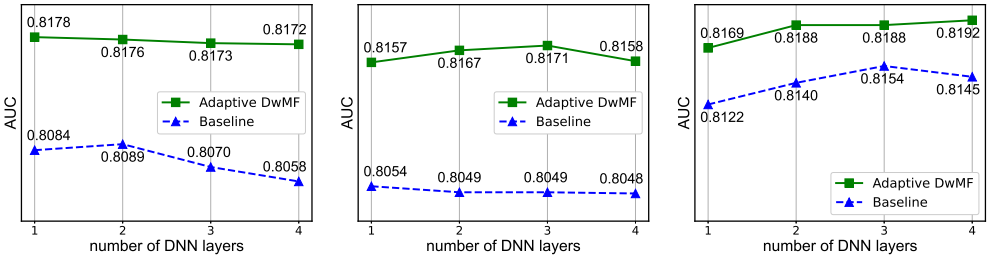

(a) Autoint+ (b) DCN (c) DLRM

Figure 5: The performance comparison in terms of the number of layers on Avazu dataset

[4]https://www.kaggle.com/c/criteo-display-ad-challenge
[5]https://labs.criteo.com/2013/12/download-terabyte-click-logs/
[6]http://www.kaggle.com/c/avazu-ctr-prediction

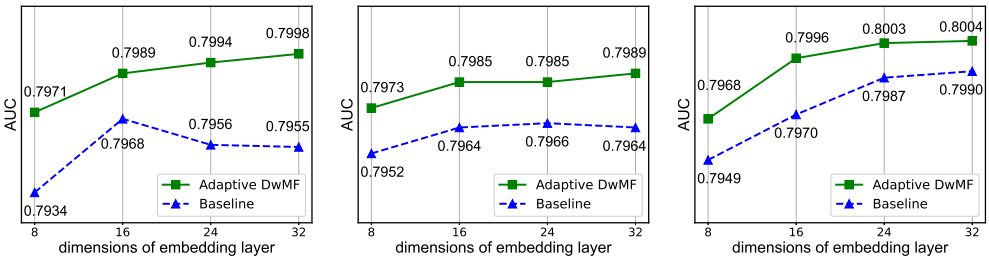

(a) Autoint+ (b) DCN (c) DLRM

Figure 6: The performance comparison in terms of the embedding layer dimensions on Terabyte dataset

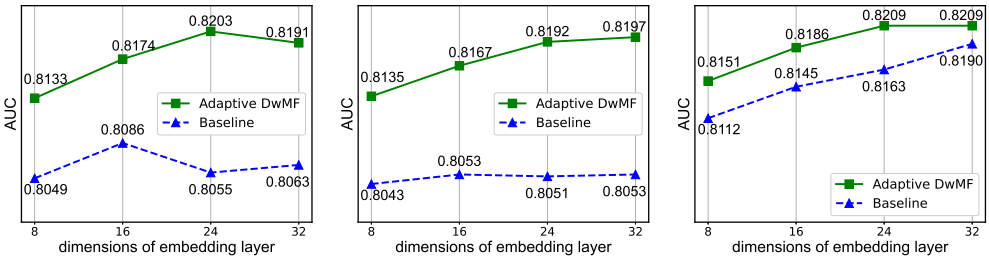

(a) Autoint+ (b) DCN (c) DLRM

Figure 7: The performance comparison in terms of the embedding layer dimensions on Avazu dataset

E.2 The Number of Parameters and Inference Time

We show the latency and parameters of the model in Table 7

For the Deep CTR model, the embedding technology is usually used to deal with features, thus the parameters of the CTR model are mainly concentrated in the embedding table part. Therefore, it can be observed from the table 7 that the parameters of the baseline model integrated with MaskFusion do not significantly rise; Correspondingly, the latency increases due to adding extra parameters and skip-connections in the DNN part of the deep CTR model. Of course, we have already considered this efficiency problem from two perspectives:

Table 7: The comparisons of the number of parameters and latency time. †means the number of DNN layers is 3; ‡means the number of DNN layers is 2.

	AUC on Criteo	latency time (ms)	Parameters (M)
DCN Baseline	0.8042	0.15	540.72
DCN MaskFusion†	0.8084	0.27	542.45
DCN MaskFusion‡	0.8085	0.20	541.52
Autoint+ Baseline	0.8049	0.12	541.30
Autoint+ MaskFusion†	0.8085	0.21	542.45
Autoint+ MaskFusion‡	0.8087	0.15	541.41
DLRM Baseline	0.8079	0.06	540.68
DLRM MaskFusion†	0.8093	0.12	541.51
DLRM MaskFusion‡	0.8086	0.08	541.29

Possible redundancy in the base model. We find that the MaskFusion can robustly improve performance for base models with various DNN complexities, the improvements introduced from MaskFusion onto a simple DNN are similar to the improvements introduced from Maskfuion onto a complicated DNN. In Section 4.4 of this paper, we show this phenomenon: after integrating MaskFusion, when the number of DNN layers is 2, the AUC can be improved as significantly as

when the number of DNN layers is 3. This means it is possible to remove some redundancy from the original base model when integrating our MaskFusion. Correspondingly, in the latency table below, it can be observed that the latency of the case that DNN is with 2 layers is significantly reduced compared to the case that DNN is with 3 layers, and it is a small increase compared to base models.

Possible redundancy in MaskFusion. As already claimed in the Functionalities Extension section of the paper. We tried to apply feature dimension reduction techniques for reducing the potential redundancy in MaskFusion, the performance keeps nearly unchanged when the feature dimension in MaskFusion is reduced. Both observations and experiments demonstrate the potential for improving the system efficiency, which can be a future exploration.

F MASKFUSION UNDERSTANDING

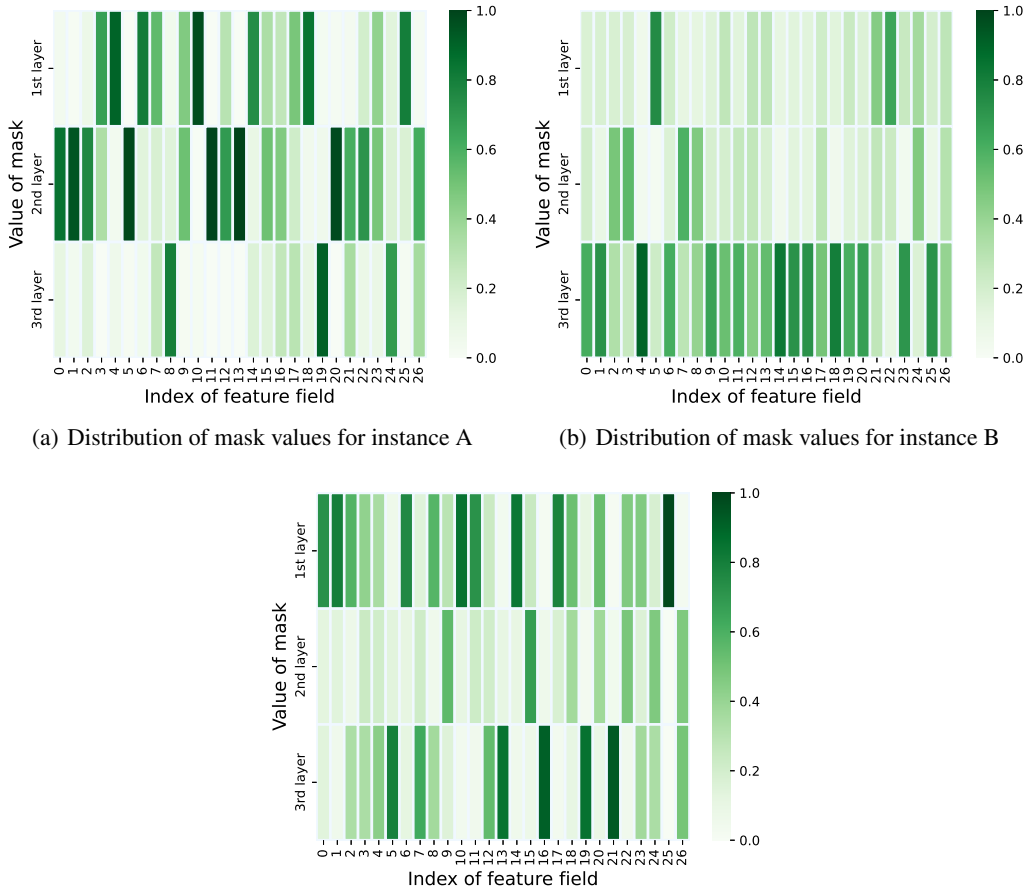

(a) Distribution of mask values for instance A

(b) Distribution of mask values for instance B

(c) Distribution of mask values for instance C

Figure 8: The mask value distribution of three instances learned on the Terabyte dataset by DLRM integrated with Mask Fusion.

As we discussed in Section 3.2, features can interact with the deep part of the deep CTR model dynamically under the MaskFusion framework. Such design will enhance the memorization ability of deep CTR models since the closer the feature is to the output layer, the more directly it can participate in the prediction task Cheng et al. (2016). Here we will show whether the MaskFusion framework captures the feature that needs to be memorized. As shown in Figure 8, Instance A, Instance B, and Instance C are randomly sampled from the dataset, and the mask values for each instance in each layer of DNN are recorded. For instance A, MaskFusion believes that most of the features should be fused

to the first and second layers of DNN, instead of the last layer. For instance B, MaskFusion believes that most features should be fused to the last layer instead of the first and second layers. For instance C, most of its features are fused in the first and last layers of the DNN. These different mask values patterns for three different instances can indicate that our MaskFusion framework has successfully learned to choose different best positions that the same features of different instances should be fused at, according to the characteristics of different instances, which also indeed dynamically make a trade-off between the generalization and memorization for different instances.

G More Functionalities Extension Details

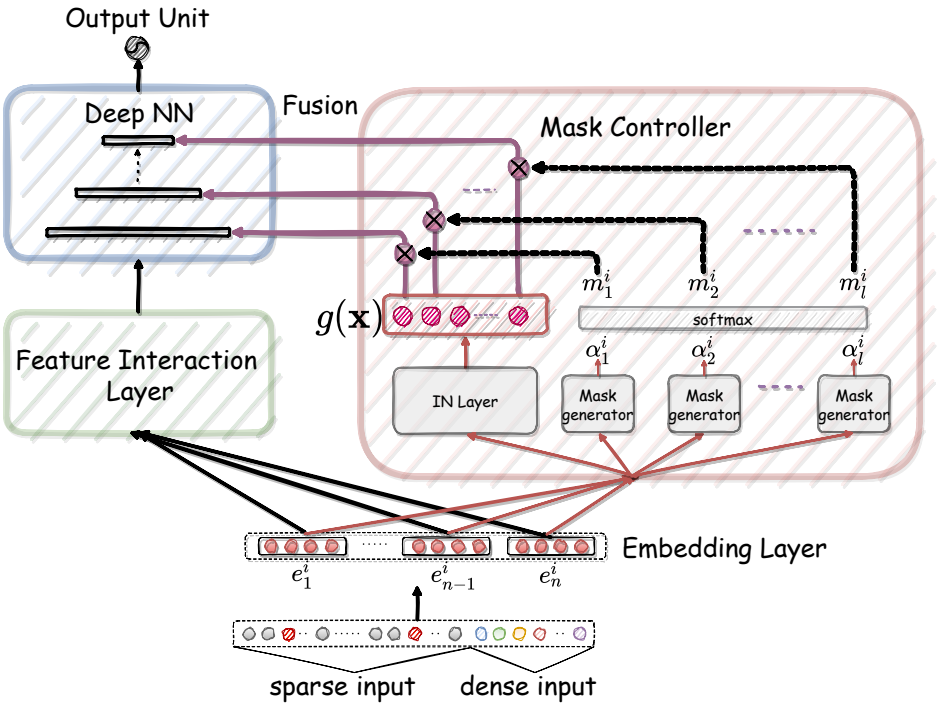

Figure 9: Embedding dimension reduction by inserting smoothed-L0 gate in the MaskFusion framework.

Table 8: The comparisons between the baseline models and SmoothL0 FwMF models. (sparsity: reduce-ratio of parameter number of fused features)

Model		Criteo			Avazu		
		AUC↑	Logloss↓	sparsity	AUC↑	Logloss↓	sparsity
IPNN	Baseline	0.8073	0.4483	-/-	0.8118	0.3600	-/-
	SmoothL0 FwMF	**0.8084**	0.4474	39%	**0.8143**	0.3585	16%
DeepFm	Baseline	0.8042	0.4512	-/-	0.8091	0.3623	-/-
	SmoothL0 FwMF	**0.8055**	0.4499	14%	**0.8132**	0.3587	62%
xDeepFm	Baseline	0.8067	0.4489	-/-	0.8144	0.3584	-/-
	SmoothL0 FwMF	**0.8079**	0.4479	16%	**0.8171**	0.3523	30%

MaskFusion Meets Embedding Dimension Reduction. Deep-learning-based CTR prediction can be formulated by the following function:

$$y = f(\mathbf{W}; \mathbf{E}) \tag{7}$$

where $\mathbf{W}$ denotes the parameters of the Deep CTR model and $\mathbf{E} \in \mathbb{R}^{n \cdot d}$ denotes the embedding vectors ($\mathbf{E}$ also denotes the feature embedding which will be fused to the deep part of the Deep CTR

model), n is feature number and d is feature dimension. As shown in Figure 9, to reduce the size of the Deep CTR model, we can prune the dimension of fused feature $\mathbf{E}$ by inserting a gate $\mathbf{g}$:

$$y = f(\mathbf{W}; \mathbf{g} \cdot \mathbf{E}) \tag{8}$$

where $\mathbf{g} \in \mathbb{R}^{n \cdot d}$. Since we want to reduce the dimension without affecting the model performance, we only remove the corresponding dimension from the feature when g is exactly 0. Therefore, it is an optimization problem with the ℓ_0 constraint. GDP Guo et al. (2021) introduces a smoothed-L0 function to prune the channel of the CNN network. Similarly, we introduce this smoothed-L0 gate function to prune the dimension of the embedding:

$$y = f(\mathbf{W}; g(\mathbf{x}) \cdot \mathbf{E}) \tag{9}$$

$$g(\mathbf{x}) = \frac{x^2}{x^2 + \epsilon} \tag{10}$$

where ϵ is a small positive number.

During the training process, the parameter $\mathbf{x}$ in the gate function will be updated by SGD Robbins & Monro (1951) optimizer with the momentum parameter 0.9 and the learning rate 0.006. The Epsilon is initialized to 0.1 and will decay by a factor of 0.999, the minimum value is 0.0005.

We present some experimental results of applying embedding dimension reduction within the MaskFusion framework in Section 4.5. Here, we conduct experiments on additional 3 classical models (IPNN Qu et al. (2016), DeepFm Guo et al. (2017) and xDeepFm Lian et al. (2018)). From Table 8, we can draw similar conclusions: after inserting feature dimension reduction in MaskFusion, Smooth-L0 FwMF consistently outperforms all baseline models with fewer feature dimensions.

MaskFusion meets DCNv2-type Mask Controller. MaskFusion is not limited to a specific augmentation way, besides the aforementioned MLP, it welcomes any other methods to generate masks to augment features. Here, we use DCNv2 as the Mask Controller for illustration. The core of DCNv2 can be expressed by $\mathbf{E}_{l+1} = \mathbf{E}_0 \odot (\mathbf{W}\mathbf{E}_l + \mathbf{b}) + \mathbf{E}_l$, where $\mathbf{E}_{l+1}$ denotes the augmented feature, $\mathbf{W}\mathbf{E}_l + \mathbf{b}$ denotes the mask. So, it can be regarded as a feature augmentation method with the residual signal. From Table 9 we can observe: If using a different augmentation method (DCNv2) as the Mask Controller, MaskFusion can still achieve better performance than baselines.

Table 9: The comparisons between the baseline models and DCNv2-type FwMF models.

Model		Criteo		Avazu	
		AUC↑	Logloss↓	AUC↑	Logloss↓
DCN	Baseline	0.8046	0.4506	0.8053	0.3641
	DCNv2-type DwMF	**0.8090**	0.4468	**0.8134**	0.3610
Autoint+	Baseline	0.8058	0.4496	0.8086	0.3621
	DCNv2-type DwMF	**0.8089**	0.4467	**0.8124**	0.3592
DLRM	Baseline	0.8085	0.4469	0.8145	0.3592
	DCNv2-type DwMF	**0.8096**	0.4461	**0.8171**	0.3563
IPNN	Baseline	0.8073	0.4483	0.8118	0.3600
	DCNv2-type DwMF	**0.8086**	0.4474	**0.8157**	0.3578
DeepFm	Baseline	0.8042	0.4512	0.8091	0.3623
	DCNv2-type DwMF	**0.8061**	0.4497	**0.8165**	0.3586
xDeepFm	Baseline	0.8067	0.4489	0.8144	0.3584
	DCNv2-type DwMF	**0.8079**	0.4479	**0.8191**	0.3551