MUTUAL EXCLUSIVITY AS A CHALLENGE FOR DEEP NEURAL NETWORKS

Anonymous authors
Paper under double-blind review

ABSTRACT

Strong inductive biases allow children to learn in fast and adaptable ways. Children use the mutual exclusivity (ME) bias to help disambiguate how words map to referents, assuming that if an object has one label then it does not need another. In this paper, we investigate whether or not standard neural architectures have a ME bias, demonstrating that they lack this learning assumption. Moreover, we show that their inductive biases are poorly matched to lifelong learning formulations of classification and translation. We demonstrate that there is a compelling case for designing neural networks that reason by mutual exclusivity, which remains an open challenge.

1 INTRODUCTION

Children are remarkable learners, and thus their inductive biases should interest machine learning researchers. To help learn the meaning of new words efficiently, children use the "mutual exclusivity" (ME) bias – the assumption that once an object has one name, it does not need another (Markman & Wachtel, 1988) (Figure 1). In this paper, we examine whether or not standard neural networks demonstrate the mutual exclusivity bias, either as a built-in assumption or as a bias that develops through training. Moreover, we examine common benchmarks in machine translation and object recognition to determine whether or not a maximally efficient learner should use mutual exclusivity.

When children endeavour to learn a new word, they rely on inductive biases to narrow the space of possible meanings. Children learn an average of about 10 new words per day from the age of one until the end of high school (Bloom, 2000), a feat that requires managing a tractable set of candidate meanings. A typical word learning scenario has many sources of ambiguity and uncertainty, including ambiguity in the mapping between words and referents. Children hear multiple words and see multiple objects within a single scene, often without clear supervisory signals to indicate which word goes with which object (Smith & Yu, 2008).

Figure 1: The mutual exclusivity task used in cognitive development research (Markman & Wachtel, 1988). Children tend to associate the novel word ("dax") with the novel object (right).

The mutual exclusivity assumption helps to resolve ambiguity in how words maps to their referents. Markman & Wachtel (1988) examined scenarios like Figure 1 that required children to determine the referent of a novel word. For instance, children who know the meaning of "cup" are presented with two objects, one which is familiar (a cup) and another which is novel (an unusual object). Given these two objects, children are asked to "Show me a dax," where "dax" is a novel nonsense word. Markman and Wachtel found that children tend to pick the novel object rather than the familiar object. Although it is possible that the word "dax" could be another word for referring to cups, children predict that the novel word refers to the novel object – demonstrating a "mutual exclusivity" bias that familiar objects do not need another name. This is only a preference; with enough evidence, children must eventually override this bias to learn hierarchical categories: a Dalmatian can be called a "Dalmatian," a "dog", or a "mammal" (Markman & Wachtel, 1988; Markman, 1989). As an often useful but sometimes misleading cue, the ME bias guides children when learning the words of their native language.

It is instructive to compare word learning in children and machines, since word learning is also a widely studied problem in machine learning and artificial intelligence. There has been substantial

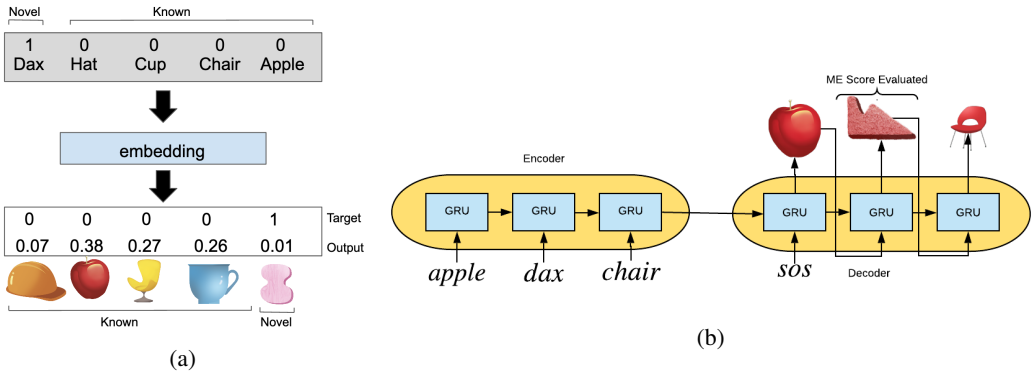

Figure 2: Evaluating mutual exclusivity in a feedforward (a) and seq2seq (b) neural network. (a) After training on a set of known objects, a novel label ("dax") is presented as a one-hot input vector. The network maps this vector to a one-hot output vector representing the predicted referent, through an intermediate embedding layer and an optional hidden layer (not shown). A representative output vector produced by a trained network is shown, placing almost all of the probability mass on known outputs. (b) A similar setup for mapping sequences of labels to their referents. During the test phase a novel label "dax" is presented and the ME Score at that output position is computed.

recent progress in object recognition, much of which is attributed to the success of deep neural networks and the availability of very large datasets (LeCun et al., 2015). But when only one or a few examples of a novel word are available, deep learning algorithms lack human-like sample efficiency and flexibility (Lake et al., 2017). Insights from cognitive science and cognitive development can help bridge this gap, and ME has been suggested as a psychologically-informed assumption relevant to machine learning (Lake et al., 2019). In this paper, we examine standard neural networks to understand if they have a ME bias. Moreover, we analyze whether or not ME is a good assumption in lifelong variants of common translation and object recognition tasks.

2 Related Work

Children utilize a variety of inductive biases like mutual exclusivity when learning the meaning of words (Bloom, 2000). Previous work comparing children and neural networks has focused on the shape bias – an assumption that objects with the same name tend to have the same shape, as opposed to color or texture (Landau et al., 1988). Children acquire a shape bias over the course of language development (Smith et al., 2002), and neural networks can do so too, as shown in synthetic learning scenarios (Colunga & Smith, 2005; Feinman & Lake, 2018) and large-scale object recognition tasks (Ritter et al., 2017) (see also Id et al. (2018) and Brendel & Bethge (2019) for alternative findings). This bias is related to how quickly children learn the meaning of new words (Smith et al., 2002), and recent findings also show that guiding neural networks towards the shape bias improves their performance (Geirhos et al., 2019). In this work, we take initial steps towards a similar investigation of the ME bias in neural networks. Compared to the shape bias, ME has broader implications for machine learning systems; as we show in our analyses, the bias is relevant beyond object recognition.

Closer to the present research, Cohn-Gordon & Goodman (2019) analyzed a ME-like effect in neural machine translation systems at the sentence level, rather than the word level considered in developmental studies and our analyses here. Cohn-Gordon & Goodman (2019) showed that neural machine translation systems often learn many-to-one sentence mappings that result in meaning loss, such that two different sentences (meanings) in the source language are mapped to the same sentence (meaning) in the target language. Using a trained network, they show how a probabilistic pragmatics model (Frank & Goodman, 2012) can be used as a post-processor to preserve meaning and encourage one-to-one mappings. These sentence-level biases do not necessarily indicate how models behave at the word level, and we are interested in the role of ME during learning rather than as a post-processing step. Nevertheless, Cohn-Gordon and Goodman's results are important and encouraging, raising the possibility that ME could aid in training deep learning systems.

3 DO NEURAL NETWORKS REASON BY MUTUAL EXCLUSIVITY?

In this section, we investigate whether or not standard neural network models have a mutual exclusivity bias. Paralleling the developmental paradigm (Markman & Wachtel, 1988), ME is analyzed by presenting a novel stimulus ("Show me the dax") and asking models to predict which outputs (meanings) are most likely. The strength of the bias is operationalized as the aggregate probability mass placed on the novel rather than the familiar meanings.

Our analyses relate to classic experiments by Marcus on whether neural networks can generalize outside their training space (Marcus, 1998; 2003). Marcus showed that a feedforward autoencoder trained on arbitrary binary patterns fails to generalize to an output unit that was never activated during training. Our aim is study whether standard architectures can recognize and learn a more abstract pattern – a perfect one-to-one mapping between input symbols and output symbols. Specifically, we are interested in model predictions regarding unseen meanings given a novel input. We also test for ME using modern neural networks in two settings using synthetic data: classification (feedforward classifiers) and translation (sequence-to-sequence models; as reported in Appendix A).

3.1 CLASSIFICATION

Synthetic data. We consider a simple one-to-one mapping task inspired by Markman & Wachtel (1988). The dataset consists of 100 pairs of input and output patterns, each of which is a one-hot vector of length 100. Each input vector represents a label (e.g., 'hat', 'cup', 'dax') and each output vector represents a possible referent object (meaning). Figure 2a shows the input and output patterns for the 'dax' case, and similar patterns are defined for the other 99 input and output symbols. A one-to-one correspondence between each input symbol and each output symbol is generated through a random permutation, and there is no structure to the data beyond the arbitrary one-to-one relationship.

Models are trained on 90 name-referent pairs and evaluated on the remaining 10 test pairs. No model can be expected to know the correct meaning of each test name – there is no way to know from the training data – but several salient patterns are discoverable. First, there is a precise one-to-one relationship exemplified by the 90 training items; the 10 test items can be reasonably assumed to follow the same one-to-one pattern, especially if the network architecture has exactly 10 unused input symbols and 10 unused output symbols. Second, the perfect one-to-one relationship ensures a perfect ME bias in the structure of the data. Although the learner does not know precisely *which new output symbol* a new input symbol refers to, it should predict that the novel input symbol will correspond to *one of the novel output symbols*. An ideal learner should discover that an output unit with a known label does not need another – in other words, it should utilize ME to make predictions.

Mutual exclusivity. Mutual exclusivity can be measured during or after the training process. Models are presented with a novel input symbol and the predicted output pattern is analyzed. We define a ME score by measuring the aggregate probability assigned to all of the novel output symbols. Let us denote the training symbol by $\mathcal{Y}$, drawn from the data distribution $(\mathcal{X}, \mathcal{Y}) \sim \mathcal{D}$ and the held out symbols $\mathcal{Y}'$ drawn from $(\mathcal{X}', \mathcal{Y}') \sim \mathcal{D}'$. The mutual exclusivity score is the sum probability assigned to unseen output symbols $\mathcal{Y}'$ on being presented with a novel input symbol $x \in \mathcal{X}'$

$$\text{ME Score } = \frac{1}{|\mathcal{D}'|} \sum_{(x_i, y_i) \in \mathcal{D}'} \sum_{y \in Y'} P(f_{net}(x) = y | x_i), \tag{1}$$

averaged over each of the test items. An ideal learner that has discovered the one-to-one relationship in the synthetic data should have a perfect ME score of 1.0. For the case in Figure 2a, the probability assigned to the novel output symbol is 0.01 and thus the corresponding ME Score is 0.01. The challenge is to get a high ME score for novel (test) items while also correctly classifying known (training) items.

Neural network architectures. A wide range of standard neural networks are evaluated on the mutual exclusivity test. We use an embedding layer to map the input symbols to vectors of size 20 or 100, followed optionally by a hidden layer, and then by a 100-way softmax output layer. The networks are trained with different activation functions (ReLUs (Nair & Hinton, 2010), TanH, Sigmoid), optimizers (Adam (Kingma & Ba, 2015), Momentum, SGD), learning rates $(0.1, 0.01, 0.001)$ and regularizers (weight decay, batch-normalisation (Ioffe & Szegedy, 2015), dropout (Srivastava

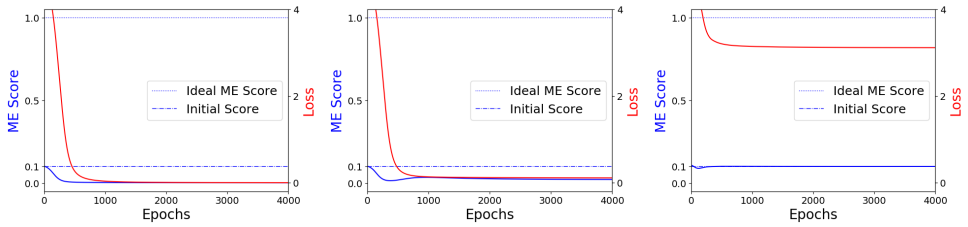

Figure 3: Evaluating mutual exclusivity on synthetic categorization tasks. ME Score (solid blue) and the cross-entropy loss (solid red) are plotted against the epochs of training. The configurations in the settings shown were: (a) Results for a model with an embedding, hidden, and classification layers, (b) Results for a model with embedding and classification layers trained with a weight decay factor of 0.001, and (c) Results for a model with an embedding and classification layer trained with an entropy regularizer.

et al., 2014b), and entropy regularization). The models are trained to maximize log-likelihood. All together, we evaluated over 400 different models on the synthetic ME task.

Results. Several representative training runs with different architectures are shown in Figure 3. An ideal learner that has discovered the one-to-one pattern should have a mutual exclusivity of 1; for a novel input, the network would assign all the probability mass to the unseen output symbols. In contrast, none of the configurations and architectures tested behave in this way. As training progresses, the mutual exclusivity score (solid blue line; Figure 3) tends to fall along with the training loss (red line). In fact, almost all of the networks acquire a strong *anti-mutual exclusivity bias*, transitioning from a initial neutral bias to placing most or all of the probability mass on familiar outputs (seen in Figure 4). An exception to this pattern is the entropy regularized model, which maintains a score equivalent to an untrained network. In general, trained models strongly predict that a novel input symbol will correspond to a known rather than unknown output symbol, in contradiction to ME and the organizing structure of the synthetic data.

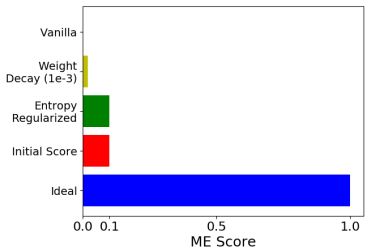

Figure 4: Ideal and untrained ME scores compared with the ME scores of a few learned models.

Further informal experiments suggest these architectures do not learn this one-to-one regularity regardless of how many input/output symbols are provided in the training set. Even with thousands of training examples demonstrating a one-to-one pattern, the networks do not learn this abstract principle and fail to capture this salient pattern in the data. Other tweaks were tried in an attempt to induce ME, including eliminating the bias units or normalizing the weights, yet we were unable to find an architecture that reliably demonstrated the ME effect.

3.2 Discussion

The results show that standard neural networks fail to reason by mutual exclusivity when trained in a variety of typical settings. The models fail to take advantage of the perfect one-to-one mapping (ME bias) seen in the synthetic data, predicting that new symbols map to familiar outputs in a many-to-many fashion.

Although our focus is on neural networks, this characteristic is not unique to this model class. We posit it more generally affects flexible models trained to maximize log-likelihood. In a trained network, the optimal activation value for an unused output node is zero: for any given training example, increasing value of an unused output simply reduces the available probability mass for the target output. Using other loss functions could result in different outcomes, but we also did not find that weight decay and entropy regularization of reasonable values could fundamentally alter the use of novel outputs. In the next section, we investigate if the lack of ME could hurt performance on common learning tasks such as machine translation and image classification.

Name	Languages	Sentence Pairs	Vocabulary Size
IWSLT'14 (Freitag et al., 2014)	Eng.-Vietnamese	∼133K	17K(en), 7K(vi)
WMT'14 (Luong et al., 2015)	Eng.-German	∼4.5M	50K(en), 50K(de)
WMT'15 (Luong & Manning, 2016)	Eng.-Czech	∼15.8M	50K(en), 50K(cs)

Table 1: Datasets used to analyze ME in machine translation.

4 SHOULD NEURAL NETWORKS REASON BY MUTUAL EXCLUSIVITY?

Mutual exclusivity has implications for a variety of common learning settings. Mutual exclusivity arises naturally in lifelong learning settings, which more realistically reflect the "open world" characteristics of human cognitive development. Unlike epoch-based learning, a lifelong learning agent does not assume a fixed set of concepts and categories. Instead, new concepts can be introduced at any point during learning. An intelligent learner should be sensitive to this possibility, and ME is one means of intelligently reasoning about the meaning of novel stimuli.

Children and adults learn in an open world with some probability of encountering a new class at any point, resembling the first epoch of training a neural net only. Moreover, the distribution of categories is neither uniformly distributed nor randomly shuffled (Smith & Slone, 2017). To simulate these characteristics, we construct lifelong learning scenarios using standard benchmarks as described below.

4.1 MACHINE TRANSLATION

In this section, we investigate if mutual exclusivity could be a helpful bias when training machine translation models in a lifelong learning paradigm. From the previous experiments, we know that the type of sequence-to-sequence (seq2seq) models used for translation acquire an anti-ME bias over the course of training (see Appendix A). Would a translation system benefit from assuming that a single word in the source sentence maps to a single word in the target sentence, and vice-versa? This assumption is not always correct since synonymy and polysemy are prevalent in natural languages, and thus the answer to whether or not ME holds is not absolute. Instead, we seek to measure the degree to which this bias holds in lifelong learning on real datasets, and compare this bias to the inductive biases of models trained on these datasets. The data for translation provides a somewhat natural distribution over the frequency at which different words are observed (there are words that appear much more frequently than the others). This allows us to use a single pass through the dataset as a proxy for lifelong translation learning.

Datasets. We analyze three common datasets for machine translation, each consisting of pairs of sentences in two languages (Table 1). The vocabularies are truncated based on word frequency in accordance with the standard practices for training neural machine translation models (Freitag et al., 2014; Luong et al., 2015; Luong & Manning, 2016).

Mutual exclusivity. There are several ways to operationalize mutual exclusivity in a machine translation setting. Mutual exclusivity could be interpreted as whether a new word in the source sentence ("Xylophone" in English) is likely to be translated to a new word in the target sentence ("Xylophon" in German), as opposed to a familiar word. Since the word alignments are difficult to determine and not provided with the datasets, we instead measure a reasonable proxy: if a new word is encountered in the source sequence, is a new word also encountered in the target sentence? For a source sentence S and an arbitrary novel word N_S, and a target sentence T and a novel word N_T, we measure a dataset's ME Score as the conditional probability $P(N_T \in T | N_S \in S)$. A hypothetical translation model could compute whether or not $N_S \in S$ by checking if the present word is absent from the vocabulary-so-far during the training process. Thus this conditional probability is an easily-computable cue for determining whether or not a model should expect a novel output word.

For the three datasets, we consider both forward and backward translation to get six scenarios for analysis. The probability $P(N_T \in T | N_S \in S)$ is estimate for a sample of 100 randomly shuffled sequences of the dataset sentence pairs.

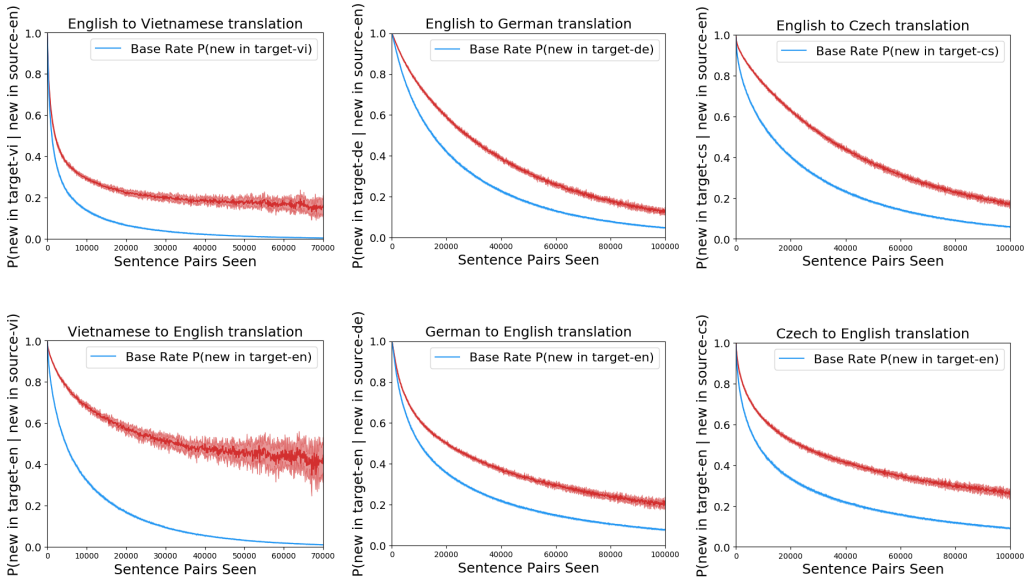

Figure 5: Analysis of mutual exclusivity in machine translation datasets. The plots show the conditional probability of encountering a new word in the target sentence, if a new word is present in the source sentence (y-axis; red line). Also plotted is the base rate of encountering a new target word (blue line). These quantities are measured as at different points during training (x-axis). Errors bars are standard deviations.

Results and Discussion. The measures of conditional probability in the six scenarios are shown in Table 2. There is a consistent pattern through the trajectory of early learning: the conditional probability $P(N_T \in T | N_S \in S)$ is high initially for thousands of initial sentence presentations, but then wanes as the network encounters more samples from the dataset. For a large part of the initial training, a seq2seq model would benefit from predicting that previously unseen words in the source language are more likely to map to unseen words in the target language. Moreover, this conditional probability is always higher than the base rate of encountering a new word, indicating that conditioning on the novelty of the input provides substantial additional signal for predicting novelty in the output. Nevertheless, even the base rate suggests that a model should expect novel words with some regularity in our settings. This is in stark contrast to the synthetic results showing that seq2seq models quickly acquire an anti-ME assumption (see Appendix A), and their expectation of mapping novel inputs to novel outputs decays rapidly as training progresses (Appendix Figure 7).

Score	En-Vi	Vi-En	En-De	De-En	En-Cs	Cs-En
0.9	0.3K	2K	4K	3K	4K	3K
0.5	3K	40K	37K	30K	40K	30K
0.1	90K	120K	120K	140K	130	150K

Table 2: Number of sentences after which the ME Score $P(N_T \in T | N_S \in S)$ falls below threshold.

4.2 Image Classification

Similar to translation, we examine if object classifiers would benefit from reasoning by mutual exclusivity during training processes that mirror lifelong learning. To study this, when selecting an image for training, we sample the class for the from a power law distribution (see Appendix B) such that the model is more likely to see certain classes (Smith & Slone, 2017).

Ideally, we would model the probability that an object belongs to a novel class based on its similarity to previous samples seen by the model (e.g., outlier detection). Identifying that an image belongs to a novel class is non-trivial, and instead we calculate the base rate for classifying an image as "new" while a learner progresses through the dataset. This measure can be seen as a lower bound on the usefulness of ME through the standard training process, since this calculation assumes a blind learner that is unaware of any novelty signal present in the raw image.

Datasets. This section examines the Omniglot dataset (Lake et al., 2015) and the ImageNet dataset (Deng et al., 2009). The Omniglot dataset has been widely used to study few-shot learning, consisting of 1623 classes of handwritten characters with 20 images per class. The ImageNet dataset consists of about 1.2 million images from 1000 different classes.

Mutual exclusivity. To measure ME throughout the training process, we examine if an image encountered for the first time while training belongs to a class that has not been seen before. This is operationalized as the probability of encountering an image from a new class N as a function of the number of images seen so far t, $P(N|t)$. This analysis is agnostic to the content of the image and whether or not it is a repeated item; it only matters whether or not the class is novel. As before, the analysis is performed using ten random runs through the dataset.

We contrast the statistics of the datasets by comparing them to the ME Score (Equation 1) of neural network classifiers trained on the datasets. For Omniglot, a convolutional neural network was trained on 1623-way classification. The architecture consists of 3 convolutional layers (each consisting of 5×5 kernels and 64 feature maps), a fully connected layer (576×128) and a softmax classification layer. It was trained with a batch size of 16 using an Adam optimizer and a learning rate of 0.001. For Imagenet, a Resnet18 model (He et al., 2016) was trained on 1000-way classification with a batch size of 256, using an Adam optimizer and a learning rate of 0.001. The probability mass assigned to the unseen classes is recorded after each optimizer step, as computed using Equation 1.

Results and Discussion. The results are summarized in Figure 6 and Table 3. The probability that a new image belongs to an unseen class $P(N|t)$ is higher than the ME score of the classifier through most of the learning phase. Comparing the statistics of the datasets to the inductive biases in the classifiers, the ME score for the classifiers is substantially lower than the baseline ME measure in the dataset, $P(N|t)$ (Table 3). For instance, the ImageNet classifier drops its ME score below 0.05 after about 8,960 images, while the approximate ME measure for the dataset shows that new classes are encountered at above this rate until at least 111,000 images. We found that higher learning rates can force the probabilities assigned to unseen classes to zero on ImageNet after just a single gradient step.

Score	Omniglot	Omniglot Classifier	Imagenet	Imagenet Classifier
0.2	24,304	2,144	1,280	2,048
0.1	99,248	22,912	8,448	3,072
0.05	160,608	43,328	111,872	8,960

Table 3: Number of images after which the ME Score falls below threshold.

These results suggest that neural classifiers, with their bias favoring frequent rather than infrequent outputs for novel stimuli, are not well-suited to lifelong learning challenges where such inferences are critical. Although we examined classifiers trained in an online fashion, we would expect similar results when we train them using replay or epoch-based training setups, where repeated presentation of past examples would only strengthen the anti-ME bias. These classifiers are hurt by their lack of ME and their failure to consider that new stimuli likely map to new classes. Ideally, a learning algorithm should be capable of leveraging the image content, combined with its own learning maturity, to decide how strongly it should reason by ME. Instead, standard models and training procedures do not provide these capabilities and do not utilize this important inductive bias observed in cognitive development.

5 General Discussion

Children use the mutual exclusivity (ME) bias to learn the meaning of new words efficiently, yet standard neural networks learn very differently. Our results show that standard deep learning algorithms lack the ability to reason with ME, including feedforward networks and recurrent sequence-to-sequence models trained to maximize log-likelihood with common regularizers. Beyond simply lacking this bias, these networks learn an anti-ME bias, preferring to map novel inputs to familiar and frequent (rather than unfamiliar) output classes. Our results also show that these characteristics are poorly matched to more realistic lifelong learning scenarios where novel classes can appear at any point, as demonstrated in the translation and classification experiments presented here. Neural

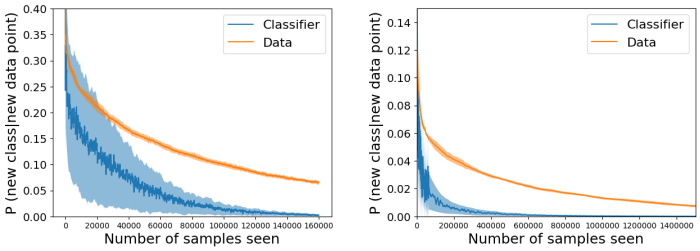

(a) Omniglot

(b) Imagenet

Figure 6: Analysis of mutual exclusivity in classification datasets. The plots show the probability that a new input image belongs to an unseen class $P(N|t)$, as a function of the number of images t seen so far during training (blue), with its standard deviation. This measure is contrasted with the ME score of a neural network classifier trained through a similar run of the dataset (orange).

nets may be currently stymied by their lack of ME bias, ignoring a powerful assumption about the structure of learning tasks.

Mutual exclusivity may be relevant in other learning scenarios. Recent work has contrasted the ability of humans and neural networks to learn compositional instructions from just one or a few examples, finding that neural networks lack the ability to generalize systematically (Lake & Baroni, 2018; Lake et al., 2019). The authors suggest that people rely on ME in these learning situations (Lake et al., 2019), and thus few-shot learning approaches could be improved by utilizing this bias as well.

In our analyses present here, we create an artificial lifelong learning setting and showed how neural networks tend to learn an inverse bias towards encountering new stimuli in the input / output spaces, regressing to the familiar. More generally, ME can be generalized from applying to "novel versus familiar" stimuli to instead handling "rare versus frequent" stimuli (e.g., in translation, rare source words may map to rare target words). The utility of reasoning by ME could be extended to early stages of epoch based learning too. For example, during epoch-based learning, neural networks take longer to acquire rare stimuli and patterns of exceptions (McClelland & Rogers, 2003), often mishandling these items for many epochs by mapping them to familiar responses. We posit that the ME assumption will be increasingly important as learners tackle more continual, lifelong, and large-scale learning challenges (Mitchell et al., 2018).

Mutual exclusivity is an open challenge for deep neural networks, but there are promising avenues for making progress. Previous cognitive models of word learning have found ways to incorporate the ME bias (Kachergis et al., 2012; McMurray et al., 2012; Frank et al., 2009; Lambert et al., 2005), although it is not straightforward to generalize these mechanisms to training deep neural networks. Although successful in reasoning by ME in some domains, these models are highly simplified or require built-in mechanisms for implementing ME, making them so far impractical for use in realistic settings. The ME bias could also be *learned* via meta learning or learning to learn strategies (Allen et al., 2019; Snell et al., 2017), with the advantage of calibrating the bias to the dataset itself rather than assuming its strength a priori. For example, the meta learning model of Santoro et al. (2016) seems capable of learning a ME bias, although it was not specifically probed in this way. Recent work by Lake (2019) demonstrated that neural nets can learn to reason by ME if trained explicitly to do so using meta seq2seq learning, showing these abilities are within the repertoire of modern tools. However acquiring ME is just one promising step toward the goal proposed here: using ME to facilitate efficient lifelong learning or large-scale classification and translation.

In conclusion, standard deep neural networks do not naturally reason by mutual exclusivity, but designing them to do so could lead to faster and more flexible learners. There is a compelling case for building models that learn through mutual exclusivity.

REFERENCES

Kelsey R Allen, Evan Shelhamer, Hanul Shin, and Joshua B Tenenbaum. Infinite mixture prototypes for few-shot learning. *arXiv preprint arXiv:1902.04552*, 2019.

P Bloom. *How Children Learn the Meanings of Words*. MIT Press, Cambridge, MA, 2000.

Wieland Brendel and Matthias Bethge. Approximating CNNs with bag-of-local-features models works suprisinlgy well on ImaeNet. *arXiv preprint*, pp. 1–15, 2019.

Kyunghyun Cho, Bart Van Merriënboer, Dzmitry Bahdanau, and Yoshua Bengio. On the properties of neural machine translation: Encoder-decoder approaches. In *Eighth Workshop on Syntax, Semantics and Structure in Statistical Translation (SSST-8)*, 2014.

Reuben Cohn-Gordon and Noah Goodman. Lost in machine translation: A method to reduce meaning loss. *arXiv preprint arXiv:1902.09514*, 2019.

Eliana Colunga and Linda B Smith. From the lexicon to expectations about kinds: a role for associative learning. *Psychological Review*, 112(2):347–82, 2005.

Jia Deng, Wei Dong, Richard Socher, Li-Jia Li, Kai Li, and Li Fei-Fei. Imagenet: A large-scale hierarchical image database. In *2009 IEEE conference on computer vision and pattern recognition*, pp. 248–255. Ieee, 2009.

Reuben Feinman and Brenden M Lake. Learning inductive biases with simple neural networks. In *Proceedings of the 40th Annual Conference of the Cognitive Science Society (CogSci)*, 2018.

Michael C Frank and Noah D Goodman. Predicting pragmatic reasoning in language games. *Science*, 336:998, 2012.

Michael C Frank, Noah D Goodman, and Joshua B Tenenbaum. Using speakers' referential intentions to model early cross-situational word learning: Research article. *Psychological Science*, 20 (5):578–585, 2009. ISSN 09567976. doi: 10.1111/j.1467-9280.2009.02335.x.

Markus Freitag, Joern Wuebker, Stephan Peitz, Hermann Ney, Matthias Huck, Alexandra Birch, Nadir Durrani, Philipp Koehn, Mohammed Mediani, Isabel Slawik, et al. Combined spoken language translation. In *Proc. of the Int. Workshop on Spoken Language Translation (IWSLT), South Lake Tahoe, CA, USA*, pp. 61, 2014.

Robert Geirhos, Patricia Rubisch, Claudio Michaelis, Matthias Bethge, Felix A. Wichmann, and Wieland Brendel. ImageNet-Trained CNNs are biased toward texture; increasing shape bias improves accuracy and robustness. *International Conference on Learning Representations (ICLR)*, 2019.

Kaiming He, Xiangyu Zhang, Shaoqing Ren, and Jian Sun. Deep residual learning for image recognition. In *Proceedings of the IEEE conference on computer vision and pattern recognition*, pp. 770–778, 2016.

Nicholas Baker Id, Hongjing Lu, Gennady Erlikhman Id, and Philip J Kellman. Deep convolutional networks do not classify based on global object shape. *PLoS Computational Biology*, pp. 1–43, 2018.

Sergey Ioffe and Christian Szegedy. Batch Normalization: Accelerating Deep Network Training by Reducing Internal Covariate Shift. *arXiv preprint*, 2015. URL `http://arxiv.org/abs/1502.03167`.

George Kachergis, Chen Yu, and Richard M. Shiffrin. An associative model of adaptive inference for learning word-referent mappings. *Psychonomic Bulletin and Review*, 19(2):317–324, 2012. ISSN 10699384. doi: 10.3758/s13423-011-0194-6.

Diederik P Kingma and Jimmy Lei Ba. Adam: A method for stochastic gradient descent. In *International Conference on Learning Representations (ICLR)*, 2015.

Brenden M Lake. Compositional generalization through meta sequence-to-sequence learning. *arXiv preprint*, 2019. URL `http://arxiv.org/abs/1906.05381`.

Brenden M Lake and Marco Baroni. Generalization without Systematicity: On the Compositional Skills of Sequence-to-Sequence Recurrent Networks. In *International Conference on Machine Learning (ICML)*, 2018.

Brenden M Lake, Ruslan Salakhutdinov, and Joshua B Tenenbaum. Human-level concept learning through probabilistic program induction. *Science*, 350(6266):1332–1338, 2015.

Brenden M Lake, Tomer D Ullman, Joshua B Tenenbaum, and Samuel J Gershman. Building machines that learn and think like people. *Behavioral and Brain Sciences*, 40:E253, 2017.

Brenden M Lake, Tal Linzen, and Marco Baroni. Human few-shot learning of compositional instructions. In *Proceedings of the 41st Annual Conference of the Cognitive Science Society*, 2019.

Patrik Lambert, Adrià De Gispert, Rafael Banchs, and José B Mariño. Guidelines for word alignment evaluation and manual alignment. *Language Resources and Evaluation*, 39(4):267–285, 2005.

Barbara Landau, Linda B. Smith, and Susan S. Jones. The importance of shape in early lexical learning. *Cognitive Development*, 3(3):299–321, 1988.

Yann LeCun, Yoshua Bengio, and Geoffrey Hinton. Deep learning. *Nature*, 521:436–444, 2015.

Minh-Thang Luong and Christopher D Manning. Achieving open vocabulary neural machine translation with hybrid word-character models. In *ACL*, 2016.

Minh-Thang Luong, Hieu Pham, and Christopher D. Manning. Effective Approaches to Attention-based Neural Machine Translation. In *Empirical Methods in Natural Language Processing (EMNLP)*, 2015.

Gary F. Marcus. Rethinking Eliminative Connectionism. *Cognitive Psychology*, 1998. ISSN 00100285. doi: 10.1006/cogp.1998.0694.

Gary F Marcus. *The Algebraic Mind: Integrating Connectionism and Cognitive Science*. MIT Press, Cambridge, MA, 2003.

Ellen M Markman. *Categorization and Naming in Children*. MIT Press, Cambridge, MA, 1989.

Ellen M. Markman and Gwyn F. Wachtel. Children's use of mutual exclusivity to constrain the meanings of words. *Cognitive Psychology*, 20(2):121–157, 1988. ISSN 00100285. doi: 10.1016/0010-0285(88)90017-5.

J L McClelland and T T Rogers. The parallel distributed processing approach to semantic cognition. *Nature Reviews Neuroscience*, 4:310–322, 2003.

Bob McMurray, Jessica S Horst, and Larissa K Samuelson. Word learning emerges from the interaction of online referent selection and slow associative learning. *Psychological review*, 119(4): 831, 2012.

Tom Mitchell, William W. Cohen, E Hruschka, Partha Talukdar, B Yang, Justin Betteridge, Andrew Carlson, B Dalvi, Matt Gardner, Bryan Kisiel, J Krishnamurthy, Ni Lao, K Mazaitis, T Mohamed, N Nakashole, E Platanios, A Ritter, M Samadi, B Settles, R Wang, D Wijaya, A Gupta, X Chen, A Saparov, M Greaves, and J Welling. Never-Ending Learning. *Communications of the Acm*, 61 (5):2302–2310, 2018.

Vinod Nair and Geoffrey E Hinton. Rectified linear units improve restricted boltzmann machines. In *Proceedings of the 27th international conference on machine learning (ICML)*, pp. 807–814, 2010.

Samuel Ritter, David GT Barrett, Adam Santoro, and Matt M Botvinick. Cognitive psychology for deep neural networks: A shape bias case study. In *Proceedings of the 34th International Conference on Machine Learning-Volume 70*, pp. 2940–2949. JMLR. org, 2017.

Adam Santoro, Sergey Bartunov, Matthew Botvinick, Daan Wierstra, and Timothy Lillicrap. Meta-Learning with Memory-Augmented Neural Networks. In *International Conference on Machine Learning (ICML)*, 2016.

Linda Smith and Chen Yu. Infants rapidly learn word-referent mappings via cross-situational statistics. *Cognition*, 106(3):1558–68, 2008.

Linda B Smith and Lauren K Slone. A developmental approach to machine learning? *Frontiers in psychology*, 8:2124, 2017.

Linda B Smith, Susan S Jones, Barbara Landau, Lisa Gershkoff-Stowe, and Larissa Samuelson. Object name learning provides on-the-job training for attention. *Psychological science*, 13(1): 13–9, 2002. ISSN 0956-7976. doi: 10.1111/1467-9280.00403. URL `http://www.ncbi.nlm.nih.gov/pubmed/11892773`.

Jake Snell, Kevin Swersky, and Richard Zemel. Prototypical networks for few-shot learning. In *Advances in Neural Information Processing Systems*, pp. 4077–4087, 2017.

Nitish Srivastava, Geoffrey Hinton, Alex Krizhevsky, Ilya Sutskever, and Ruslan Salakhutdinov. Dropout: A simple way to prevent neural networks from overfitting. *Journal of Machine Learning Research (JMLR)*, 15:1929–1958, 2014a.

Nitish Srivastava, Geoffrey Hinton, Alex Krizhevsky, Ilya Sutskever, and Ruslan Salakhutdinov. Dropout: a simple way to prevent neural networks from overfitting. *The Journal of Machine Learning Research*, 15(1):1929–1958, 2014b.

Ilya Sutskever, Oriol Vinyals, and Quoc V Le. Sequence to Sequence Learning with Neural Networks. In *Advances in Neural Information Processing Systems (NIPS)*, 2014.

APPENDIX

A DO SEQUENCE-TO-SEQUENCE MODELS REASON BY MUTUAL EXCLUSIVITY?

Synthetic data. We evaluate if a different class of models, sequence-to-sequence (seq2seq) neural networks (Sutskever et al., 2014), take better advantage of ME structure in the data. This popular class of models is used in machine translation and other natural language processing tasks, and thus the nature of their inductive biases is critical for many applications. As in the previous section, we create a synthetic dataset that has a perfect ME bias: each symbol in the source maps to exactly one symbol in the target. We also have a perfect alignment in the dataset, so that each token in the source corresponds to the token at the same position in the target. The task is illustrated in Figure 2b. We consider translation from sequences of words to sequences of referent symbols.

The dataset consists of 20 label-referent pairings. Ten pairs are used to train the model and familiarize the learning algorithm with the task. The remaining ten pairs were used in the test phase. To train the model, we generate 1000 sequences of words whose lengths range from 1 to 5. To generate sequences for the test phase, words in the training sequences are replaced with new words with a probability of 0.2. Thus, 1000 sequences are used to test for ME. The ME score is evaluated using Equation 1 at positions in the output sequence where the corresponding input is new. As shown in Figure 2b, the ME score is evaluated in the second position which corresponds to the novel word "dax," using the probability mass assigned to the unseen output symbols.

Neural network architectures. We probe a seq2seq model that has a recurrent encoder using Gated Recurrent Units (GRUs) (Cho et al., 2014) and a GRU decoder. Both the encoder and decoder had embedding and hidden sizes of 256. Dropout (Srivastava et al., 2014a) with a probability of 0.5 was used during training. The networks are trained using an Adam (Kingma & Ba, 2015) optimizer with a learning rate of 0.001 and a log-likelihood loss. Two versions of the network were trained with and without attention (Luong et al., 2015).

Results. Results are shown in Figure 7 and confirm our findings from the feedforward network. The ME score falls to zero within a few training iterations, and the networks fail to assign any substantial probability to the unseen classes. The networks achieve a perfect score on the training set, but cannot extrapolate the one-to-one mappings to unseen symbols. Again, not only do seq2seq models fail to show a mutual exclusivity bias, they acquire a *anti-mutual exclusivity bias* that goes against the structure of the dataset.

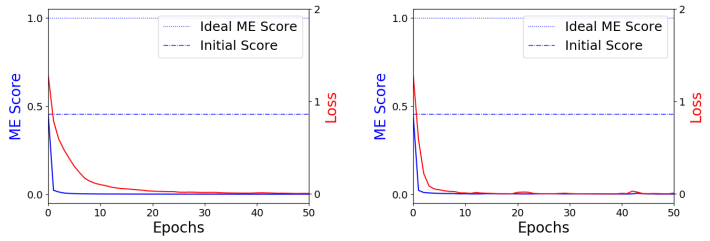

(a) (b)

Figure 7: Results for the synthetic seq2seq task. The configurations shown in the setting are (a) Results for a seq2seq GRU without attention (b) Results for a seq2seq GRU with attention.

B SAMPLING USING A POWER LAW TO SIMULATE LIFELONG LEARNING

To simulate a naturalistic lifelong learning scenario, we try to sample a few classes more frequently than the others. To do this, we sample the classes for training using a power law distribution. Weights are assigned to the classes using the following formula,

$$W(c) = \frac{1}{c^{1.5}}$$

where c is the index of the class. After the class for training is chosen, we uniformly sample from the images of that class for training.