CAN CNNS BE MORE ROBUST THAN TRANSFORMERS?

Zeyu Wang[1] **Yutong Bai**[2] **Yuyin Zhou**[1] **Cihang Xie**[1]
[1]UC Santa Cruz [2]Johns Hopkins University

ABSTRACT

The recent success of Vision Transformers is shaking the long dominance of Convolutional Neural Networks (CNNs) in image recognition for a decade. Specifically, in terms of robustness on out-of-distribution samples, recent research finds that Transformers are inherently more robust than CNNs, regardless of different training setups. Moreover, it is believed that such superiority of Transformers should largely be credited to their *self-attention-like architectures per se*. In this paper, we question that belief by closely examining the design of Transformers. Our findings lead to three highly effective architecture designs for boosting robustness, yet simple enough to be implemented in several lines of code, namely a) patchifying input images, b) enlarging kernel size, and c) reducing activation layers and normalization layers. Bringing these components together, we are able to build pure CNN architectures without any attention-like operations that are as robust as, or even more robust than, Transformers. We hope this work can help the community better understand the design of robust neural architectures. The code is publicly available at https://github.com/UCSC-VLAA/RobustCNN.

1 INTRODUCTION

The success of deep learning in computer vision is largely driven by Convolutional Neural Networks (CNNs). Starting from the milestone work AlexNet (Krizhevsky et al., 2012), CNNs keep pushing the frontier of computer vision (Simonyan & Zisserman, 2015; He et al., 2016; Tan & Le, 2019). Interestingly, the recently emerged Vision Transformer (ViT) (Dosovitskiy et al., 2020) challenges the leading position of CNNs. ViT offers a completely different roadmap—by applying the pure self-attention-based architecture to sequences of image patches, ViTs are able to attain competitive performance on a wide range of visual benchmarks compared to CNNs.

The recent studies on out-of-distribution robustness (Bai et al., 2021; Zhang et al., 2022; Paul & Chen, 2022) further heat up the debate between CNNs and Transformers. Unlike the standard visual benchmarks where both models are closely matched, Transformers are much more robust than CNNs when testing out of the box. Moreover, Bai et al. (2021) argue that, rather than being benefited by the advanced training recipe provided in (Touvron et al., 2021a), such strong out-of-distribution robustness comes inherently with the Transformer's self-attention-like architecture. For example, simply "upgrading" a pure CNN to a hybrid architecture (*i.e.*, with both CNN blocks and Transformer blocks) can effectively improve out-of-distribution robustness (Bai et al., 2021).

Though it is generally believed that the architecture difference is the key factor that leads to the robustness gap between Transformers and CNNs, existing works fail to answer which *architectural elements* in Transformer should be attributed to such stronger robustness. The most relevant analysis is provided in (Bai et al., 2021; Shao et al., 2021)—both works point out that Transformer blocks, where self-attention operation is the pivot unit, are critical for robustness. Nonetheless, given a) the Transformer block itself is already a compound design, and b) Transformer also contains many other layers (*e.g.*, patch embedding layer), the relationship between robustness and Transformer's architectural elements remains confounding. In this work, we take a closer look at the architecture design of Transformers. More importantly, we aim to explore, with the help of the architectural elements from Transformers, *whether CNNs can be robust learners as well*.

Our diagnose delivers three key messages for improving out-of-distribution robustness, from the perspective of neural architecture design. Firstly, patchifying images into non-overlapped patches can

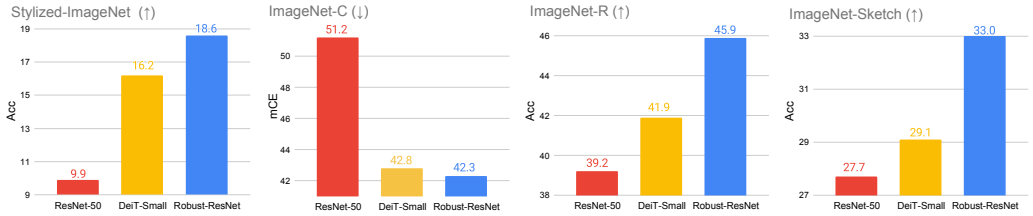

Figure 1: Comparison of out-of-distribution robustness among ResNet, DeiT, and our enhanced ResNet (dubbed *Robust-ResNet*). Though DeiT-S largely outperforms the vanilla ResNet, it performs worse than Robust-ResNet on these robustness benchmarks.

substantially contribute to out-of-distribution robustness; more interestingly, regarding the choice of patch size, we find the larger the better. Secondly, despite applying small convolutional kernels is a popular design recipe, we observe adopting a much larger convolutional kernel size (*e.g.*, from 3×3 to 7×7, or even to 11×11) is necessary for securing model robustness on out-of-distribution samples. Lastly, as inspired by the recent work (Liu et al., 2022), we note aggressively reducing the number of normalization layers and activation functions is beneficial for out-of-distribution robustness; meanwhile, as a byproduct, the training speed could be accelerated by up to ~23%, due to fewer normalization layers being used (Gitman & Ginsburg, 2017; Brock et al., 2021).

Our experiments verify that all these three architectural elements consistently and effectively improve out-of-distribution robustness on a set of CNN architectures. The largest improvement is reported by integrating all of them into CNNs' architecture design—as shown in Fig. 1, without applying any self-attention-like components, our enhanced ResNet (dubbed Robust-ResNet) is able to outperform a similar-scale Transformer, DeiT-S, by 2.4% on Stylized-ImageNet (16.2% *vs.* 18.6%), 0.5% on ImageNet-C (42.8% *vs.* 42.3%), 4.0% on ImageNet-R (41.9% *vs.* 45.9%) and 3.9% on ImageNet-Sketch (29.1% *vs.* 33.0%). We hope this work can help the community better understand the underlying principle of designing robust neural architectures.

2 Related Works

Vision Transformers. Transformers (Vaswani et al., 2017), which apply self-attention to enable global interactions between input elements, underpins the success of building foundation models in natural language processing (Devlin et al., 2019; Yang et al., 2019; Dai et al., 2019; Radford et al., 2018; 2019; Brown et al., 2020; Bommasani et al., 2021). Recently, Dosovitskiy *et al.* (Dosovitskiy et al., 2020) show Transformer attains competitive performance on the challenging ImageNet classification task. Later works keep pushing the potential of Transformer on a variety of visual tasks, in both supervised learning (Touvron et al., 2021a; Yuan et al., 2021; Liu et al., 2021; Wang et al., 2021; Yuan et al., 2021; Zhai et al., 2021; Touvron et al., 2021b; Xue et al., 2021) and self-supervised learning (Caron et al., 2021; Chen et al., 2021; Bao et al., 2022; Zhou et al., 2022; Xie et al., 2021; He et al., 2022), showing a seemly inevitable trend on replacing CNNs in computer vision.

CNNs striking back. There is a recent surge in works that aim at retaking the position of CNNs as the favored architecture. Wightman *et al.* (Wightman et al., 2021) demonstrate that, with the advanced training setup, the canonical ResNet-50 is able to boost its performance by 4% on ImageNet. In addition, prior works show modernizing CNNs' architecture design is essential—by either simply adopting Transformer's patchify layer (Trockman & Kolter, 2022) or aggressively bringing in every possible component from Transformer (Liu et al., 2022), CNNs are able to attain competitive performance w.r.t. Transformers across a range of visual benchmarks.

Our work is closely related to ConvNeXt (Liu et al., 2022), while shifting the study focus from standard accuracy to robustness. Moreover, rather than specifically offering a unique neural architecture as in (Liu et al., 2022), this paper aims to provide a set of useful architectural elements that allows CNNs to be able to match, or even outperform, Transformers when measuring robustness.

Out-of-distribution robustness. Dealing with data from shifted distributions is a commonly encountered problem when deploying models in the real world. To simulate such challenges, several out-of-distribution benchmarks have been established, including measuring model performance

Table 1: Comparison of various baseline models. We replace the ResNet Bottleneck block with four different stronger building blocks, and keep the computational cost of baseline models on par with DeiT counterparts. We observe a significant gain in terms of clean image accuracy, but our CNN baseline models are still less robust than DeiT.

Architecture	FLOPs	IN (↑)	S-IN (↑)	IN-C (↓)	IN-R (↑)	IN-SK (↑)
ResNet50	4.1G	78.4	9.9	51.2	39.2	27.7
DeiT-S	4.6G	79.8	16.2	42.8	41.9	29.1
ResNet-DW	4.8G	79.7	10.6	50.1	41.3	29.1
ResNet-Inverted-DW	4.6G	80.0	10.8	47.7	41.9	29.4
ResNet-Up-Inverted-DW	4.7G	79.7	12.9	47.9	42.9	30.8
ResNet-Down-Inverted-DW	4.5G	79.6	12.1	49.0	42.5	29.5

on images with common corruptions (Hendrycks & Dietterich, 2018) or with various renditions (Hendrycks et al., 2021). Recently, a set of works (Bai et al., 2021; Zhang et al., 2022; Paul & Chen, 2022) find that Transformers are inherently much more robust than CNNs on out-of-distribution samples. Our work is a direct follow-up of Bai et al. (2021), whereas we stand on the opposite side—*we show CNNs can in turn outperform Transformers in out-of-distribution robustness*.

3 Settings

Following the setup in Bai et al. (2021), in this paper, the robustness is thoroughly compared between CNNs and Transformers using ResNet (He et al., 2016) and ViT (Dosovitskiy et al., 2020).

CNN Block Instantiations. We consider four different block instantiations, as shown in Fig. 2. The first block is Depth-wise ResNet Bottleneck block (Xie et al., 2017), in which the 3×3 vanilla convolution layer is replaced with a 3×3 depth-wise convolution layer. The second block is the Inverted Depth-wise ResNet Bottleneck block, in which the hidden dimension is four times the input dimension (Sandler et al., 2018). The third block is based on the second block, with the depth-wise convolution layer moved up in position as in ConvNeXT (Liu et al., 2022). Similarly, based on the second block, the fourth block moves down the position of the depthwise convolution layer. We replace the bottleneck building block in the original ResNet architecture with these four blocks, and refer to the resulting models as ResNet-DW, ResNet-Inverted-DW, ResNet-Up-Inverted-DW, and ResNet-Down-Inverted-DW, respectively.

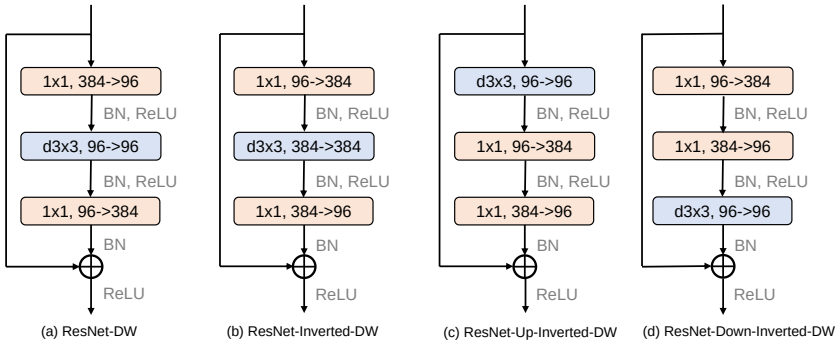

Figure 2: Architectures of four different instantiations of CNN block.

Computational Cost. In this work, we use FLOPs to measure model size. Here we note that directly replacing the ResNet bottleneck block with the above four instantiated blocks will significantly reduce the total FLOPs of the model, due to the usage of the depth-wise convolution. To mitigate the computational cost loss and to increase model performance, following the spirit of ResNeXT (Xie et al., 2017), we change the channel setting of each stage from (64, 128, 256, 512) to (96, 192, 384, 768). We then tune the block number in stage 3 to keep the total FLOPs of baseline models roughly the same as DeiT-S. The final FLOPs of our baseline models are shown in Tab. 1. Unless otherwise stated, all models considered in this work are of a similar scale as DeiT-S.

Robustness Benchmarks. In this work, we extensively evaluate the model performance on out-of-distribution robustness using the following benchmarks: 1) Stylized-ImageNet(Geirhos et al., 2018), which contains synthesized images with shape-texture conflicting cues; 2) ImageNet-C(Hendrycks & Dietterich, 2018), with various common image corruptions; 3) ImageNet-R (Hendrycks et al., 2021), which contains natural renditions of ImageNet object classes with different textures and local image statistics; 4) ImageNet-Sketch (Wang et al., 2019), which includes sketch images of the same ImageNet classes collected online.

Training Recipe. CNNs may achieve better robustness by simply tuning the training recipe (Bai et al., 2021; Wightman et al., 2021). Therefore, in this work, we deliberately apply the standard 300-epoch DeiT training recipe (Touvron et al., 2021a) for all models unless otherwise mentioned, so that the performance difference between models can only be attributed to the architecture difference.

Baseline Results. The results are shown in Tab. 1. For simplicity, we use "IN", "S-IN", "IN-C", "IN-R", and "IN-SK" as abbreviations for "ImageNet", "Stylized-ImageNet", "ImageNet-C", "ImageNet-R", and "ImageNet-Sketch". We already know that DeiT-S shows better robustness generalization than ResNet50 from (Bai et al., 2021). Interestingly, even when equipped with stronger depth-wise convolution layers, the ResNet architecture can only attain similar clean image accuracy while still being non-trivially less robust compared with the DeiT counterpart, suggesting the hidden magic lies in the architecture design of Vision Transformer.

4 Component Diagnosis

In this section, we present three effective architectural designs that draw inspiration from Transformers, but work surprisingly well on CNNs as well. These designs are as follows: 1) patchifying input images (Sec. 4.1), b) enlarging the kernel size (Sec. 4.2), and finally, 3) reducing the number of activation layers and normalization layers (Sec. 4.3). Notably, the first design has a non-negligible effect on network FLOPs, which we mitigate by adding back blocks in the third stage.

4.1 Patchify Stem

A CNN or a Transformer typically down-samples the input image at the beginning of the network to obtain a proper feature map size. A standard ResNet architecture achieves this by using a 7×7 convolution layer with stride 2, followed by a 3×3 max pooling with stride 2, resulting in a 4× resolution reduction. On the other hand, ViT adopts a much more aggressive down-sampling strategy by partitioning the input image into p×p non-overlapping patches and projects each patch with a linear layer. In practice, this is implemented by a convolution layer with kernel size p and stride p, where p is typically set to 16. Here the layers preceding the typical ResNet block or the self-attention block in ViT are referred to as the *stem*. While previous works have investigated the importance of stem setup in CNNs (Trockman & Kolter, 2022) and Transformers (Xiao et al., 2021), none have examined this module from the perspective of robustness.

To investigate this further, we replace the ResNet-style stem in the baseline models with the ViT-style patchify stem. Specifically, we use a convolution layer with kernel size p and stride p, where p varies from 4 to 16. We keep the total stride of the model fixed, so that a 224×224 input image will always lead to a 7×7 feature map before the final global pooling layer. In particular, the original ResNet sets stride=2 for the first block in stages 2, 3, and 4. We set stride=1 for the first block in stage 2 when employing 8×8 patchify stem, and set stride=1 for the first block in stages 2 and 3 when employing 16×16 patchify stem. To ensure a fair comparison, we add some blocks in stage 3 to maintain similar FLOPs as before.

In Tab. 2, we observe that increasing the patch size of the ViT-style patchify stem leads to increased performance on robustness benchmarks, though at the potential cost of clean accuracy. Specifically, for all baseline models, when patch size=8, the performance on all robustness benchmarks is boosted by at least 0.6%; when patch size=16, the performance on all robustness benchmarks is boosted by at least 1.2%, with the most significant improvement being 6.6% on Stylized-ImageNet. Surprisingly, this simple operation demonstrates significant potential for closing the robustness gap between CNNs and Transformers, suggesting a large portion of the robustness of ViT can be attributed to the patchify stem.

Table 2: The performance of different baseline models equipped with ViT-style patchify stem. "PX" refers to the model having a ViT-style patchify stem with the patch size set to X. The block number in stage 3 is increased when the patch size is larger. With a larger patch size, the models attain better robustness but worse clean accuracy.

Architecture	FLOPs	IN (↑)	S-IN (↑)	IN-C (↓)	IN-R (↑)	IN-SK (↑)
ResNet50	4.1G	78.4	9.9	51.2	39.2	27.7
DeiT-S	4.6G	79.8	16.2	42.8	41.9	29.1
ResNet-DW	4.8G	79.7	10.6	50.1	41.3	29.1
+ P4	4.6G	79.6	11.4	51.2	40.5	28.3
+ P8	4.6G	79.9	12.7	47.6	42.5	30.1
+ P16	4.6G	78.5	17.0	44.3	44.8	32.0
ResNet-Inverted-DW	4.6G	80.0	10.8	47.7	41.9	29.4
+ P4	4.5G	80.2	11.2	48.8	41.5	29.8
+ P8	4.6G	79.8	14.8	45.4	44.0	31.8
+ P16	4.6G	77.9	17.2	42.5	44.9	32.4
ResNet-Up-Inverted-DW	4.7G	79.7	12.9	47.9	42.9	30.8
+ P4	4.5G	80.0	13.5	48.9	42.3	30.7
+ P8	4.7G	79.8	15.7	46.3	44.0	31.4
+ P16	4.5G	77.9	17.0	43.9	44.6	32.0
ResNet-Down-Inverted-DW	4.5G	79.6	12.1	49.0	42.5	29.5
+ P4	4.4G	79.8	12.4	48.6	41.8	29.4
+ P8	4.5G	79.6	15.2	46.2	43.5	30.7
+ P16	4.6G	78.0	16.2	43.8	43.8	30.6

We have also conducted experiments with more advanced patchify stems, and surprisingly found them not so helpful on out-of-distribution robustness. See Appendix A.2 for details. This suggests that clean accuracy and out-of-distribution robustness are not always positively correlated. In other words, a design that enhances clean accuracy may not necessarily lead to better robustness. These findings further underscore the importance of exploring methods that can boost robustness in addition to improving clean accuracy.

4.2 Large Kernel Size

One of the most critical properties of self-attention operation that distinguish it from the classic convolution operation, is that it operates on the whole input image or feature map and thus has a global receptive field. Even before the rise of Vision Transformer, the importance of capturing long-range dependency has been demonstrated for CNNs as well. One typical example is the Non-local Neural Network which has been shown to be highly effective for both static and sequential image recognition even when equipped with only one non-local block (Wang et al., 2018). Still, the most popular design is to stack many 3×3 convolution layers to gradually increase the network receptive field as it goes deeper.

In this section, we aim to mimic the behavior of the self-attention block, by increasing the kernel size of the depth-wise convolution layer. We experiment with various kernel sizes, including 5, 7, 9, 11, and 13, and evaluate their performance on different robustness benchmarks, are shown in Fig. 3. Our results indicate that larger kernel sizes generally lead to better clean accuracy and stronger robustness. However, we also observe that the performance gain gradually saturates when the kernel size becomes too large.

It is worth mentioning that using convolutions of larger kernels will incur notable extra computation. And we would like to highlight that this particular component design would be impossible without the help of depth-wise convolution layers, which significantly reduces the computational cost of large kernel convolution layers in all four blocks. For example, if we directly change the kernel size in ResNet50 from 3 to 5, the total FLOPs of the resulting model would be 7.4G, which is considerably larger than its Transformer counterpart. However, with the depth-wise convolution layer, increasing kernel size from 3 to 13 typically only increase the FLOPs by 0.3G, which is relatively small compared to the FLOPs of DeiT-S (4.6G), with one exception ResNet-Inverted-DW.

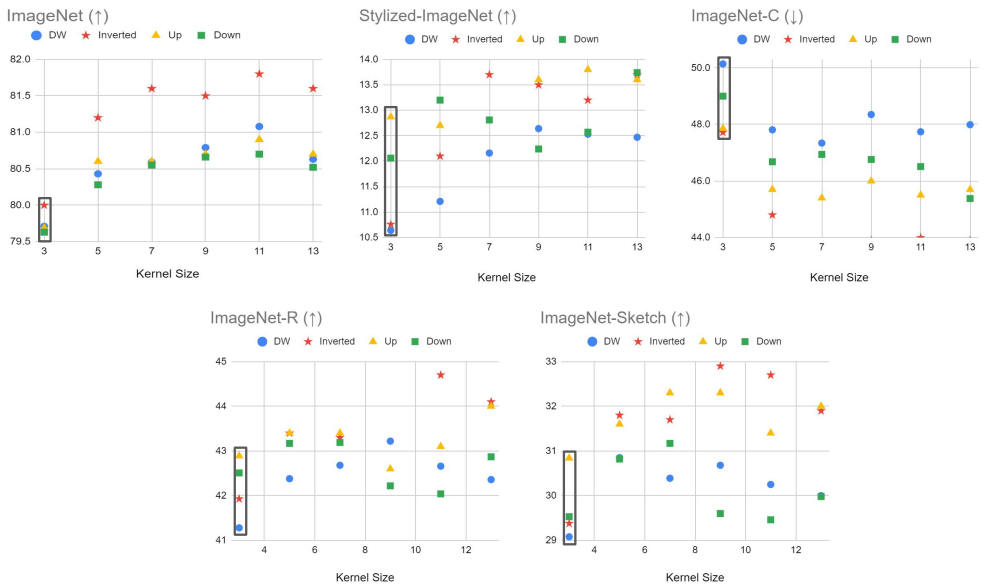

Figure 3: Robustness evaluation of model with varying kernel size. Different colors and shapes denote different models.

Table 3: The performance of models with differently removed activation layers. We use ✓ to denote keeping an activation layer and ✗ to denote removing an activation layer.

Architecture	FLOPs	ReLU 1st	ReLU 2nd	ReLU 3rd	IN ↑	S-IN ↑	IN-C ↓	IN-R ↑	IN-SK ↑
ResNet50	4.1G	✓	✓	✓	78.4	9.9	51.2	39.2	27.7
DeiT-S	4.6G	✓	✓	✓	79.8	16.2	42.8	41.9	29.1
ResNet-DW	4.8G	✓	✓	✓	79.7	10.6	50.1	41.3	29.1
		✓	✗	✗	74.8	8.3	58.6	37.1	24.5
		✗	✓	✗	73.2	8.6	60.5	36.2	23.3
		✗	✗	✓	79.4	11.7	50.5	42.8	29.8
ResNet-Inverted-DW	4.6G	✓	✓	✓	80.0	10.8	47.7	41.9	29.4
		✓	✗	✗	80.7	12.3	46.4	45.3	31.9
		✗	✓	✗	80.3	11.2	48.5	44.0	30.9
		✗	✗	✓	72.5	9.7	59.5	37.5	24.7
ResNet-Up-Inverted-DW	4.7G	✓	✓	✓	79.7	12.9	47.9	42.9	30.8
		✓	✗	✗	67.8	9.4	65.0	33.0	19.7
		✗	✓	✗	80.1	13.0	47.3	44.2	30.0
		✗	✗	✓	68.7	8.9	64.4	33.4	20.2
ResNet-Down-Inverted-DW	4.5G	✓	✓	✓	79.6	12.1	49.0	42.5	29.5
		✓	✗	✗	80.7	13.0	46.6	45.9	32.8
		✗	✓	✗	70.1	9.9	63.3	35.2	21.8
		✗	✗	✓	68.8	8.3	65.1	33.7	21.9

Because of the large channel dimension in the Inverted Bottleneck design, increasing kernel size from 3 to 13 brings a total of 1.4G FLOPs increase, rendering an unfair comparison to some extent. Nevertheless, the trend for all four architectures is the same. Furthermore, the extra computational cost brought by large kernel size can be mitigated by employing a patchify stem with a large patch size, so that our final models will still be on the same scale as DeiT-S. For models with multiple proposed designs, please refer to Sec. 5.

4.3 Reducing Activation and Normalization Layers

A typical Vision Transformer block usually has fewer activation and normalization layers than a ResNet block (Dosovitskiy et al., 2020; Liu et al., 2021), an architecture design found to be very

Table 4: The performance of models with differently removed activation and normalization layer. Note that the results are obtained with the best choice of only one activation layer in a block based on the results of Tab. 3. We use ✓ to denote keeping a normalization layer and ✗ to denote removing a normalization layer. It is observed that the highlighted architectural design choices consistently lead to improved robustness upon the baselines.

Architecture	FLOPs	BN			IN ↑	S-IN ↑	IN-C ↓	IN-R ↑	IN-SK ↑
		1st	2nd	3rd					
ResNet50	4.1G	✓	✓	✓	78.4	9.9	51.2	39.2	27.7
DeiT-S	4.6G	✓	✓	✓	79.8	16.2	42.8	41.9	29.1
ResNet-DW	4.8G	✓	✓	✓	79.7	10.6	50.1	41.3	29.1
		✓	✗	✗	79.4	11.6	49.3	43.3	29.9
		✗	✓	✗	79.5	10.6	49.5	43.1	29.3
		✗	✗	✓	79.3	11.1	50.7	42.5	30.2
ResNet-Inverted-DW	4.6G	✓	✓	✓	80.0	10.8	47.7	41.9	29.4
		✓	✗	✗	80.4	12.9	47.0	45.8	32.4
		✗	✓	✗	80.0	11.2	49.3	44.1	31.2
		✗	✗	✓	80.1	13.0	46.8	44.3	30.8
ResNet-Up-Inverted-DW	4.7G	✓	✓	✓	79.7	12.9	47.9	42.9	30.8
		✓	✗	✗	80.5	14.3	45.0	47.2	33.1
		✗	✓	✗	80.4	12.9	47.0	45.8	32.4
		✗	✗	✓	80.1	13.0	46.8	44.3	30.8
ResNet-Down-Inverted-DW	4.5G	✓	✓	✓	79.6	12.1	49.0	42.5	29.5
		✓	✗	✗	80.5	13.6	46.4	45.9	33.3
		✗	✓	✗	80.7	13.1	46.1	45.5	31.7
		✗	✗	✓	80.8	12.7	46.5	46.1	33.1

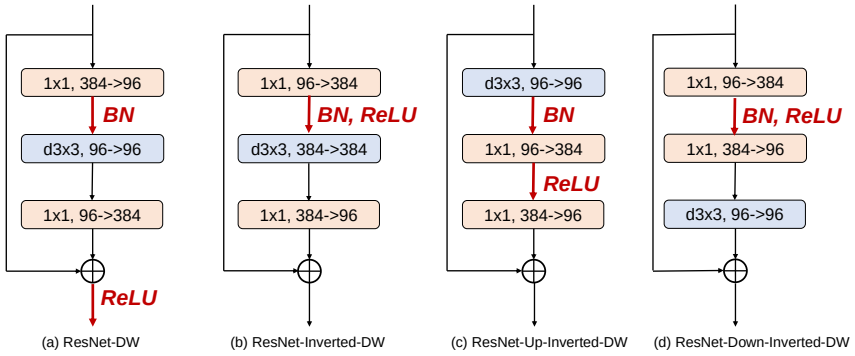

Figure 4: The optimal position of normalization and activation layers for different block architectures.

effective in ConvNeXT (Liu et al., 2022). In this work, we directly borrow the idea of reducing activation layers and normalization layers in ConvNeXT for all four block instantiations, and find it to be beneficial to clean accuracy as well as out-of-distribution robustness. Specifically, in a typical ResNet block, there is one normalization layer and one activation layer following each convolution layer, resulting in a total of three normalization layers and activation layers in one block. In our implementation, for each block, we remove two normalization layers and activation layers, and leave only one normalization layer and activation layer.

We conduct experiments with different combinations of removing activation and normalization layers and empirically find that the best results are achieved by leaving only one activation layer after the convolution layer where the channel dimension expands (*i.e.*, the number of output channels is larger than that of the input channels) and leaving one normalization layer after the first convolution layer. The optimal configuration is visualized in Fig. 4. The results of the models with differently removed layers are shown in Tab. 3 and Tab. 4. For instance, for ResNet-Up-Inverted-DW, we observe improvements of 1.4% on Stylized-ImageNet (12.9% *vs.* 14.3%), 2.9% improvement on ImageNet-C (47.9% *vs.* 45.0%), 4.3% improvement on ImageNet-R (42.9% *vs.* 47.2%), and 2.3% improvement on ImageNet-Sketch (30.8% *vs.* 33.1%). Additionally, reducing the number of nor-

Table 5: The performance of different baseline models equipped with ViT-style patchify stem, large kernel size, and fewer activation and normalization layers. The model with the suffix "PX" refers to that it has a ViT-style patchify stem with patch size set to X. "KX" refers to that the model uses blocks with a depth-wise convolution layer with kernel size X. "NormXActY" refers to that the model has only one normalization layer after the Xth convolution layer and one activation layer after the Yth convolution layer in the block.

Architecture	FLOPs	IN (↑)	S-IN (↑)	IN-C (↓)	IN-R (↑)	IN-SK (↑)
ResNet50	4.1G	78.4	9.9	51.2	39.2	27.7
DeiT-S	4.6G	79.8	16.2	42.8	41.9	29.1
ResNet-DW	4.8G	79.7	10.6	50.1	41.3	29.1
+ P16 + K11 + Norm1Act3	4.5G	79.4	18.6	42.3	45.9	33.0
ResNet-Inverted-DW	4.6G	80.0	10.8	47.7	41.9	29.4
+ P16 + K7 + Norm1Act1	4.6G	79.0	19.5	42.1	45.9	32.8
ResNet-Up-Inverted-DW	4.7G	79.7	12.9	47.9	42.9	30.8
+ P16 + K11 + Norm1Act2	4.4G	79.2	20.2	40.9	48.7	35.2
ResNet-Down-Inverted-DW	4.5G	79.6	12.1	49.0	42.5	29.5
+ P16 + K11 + Norm1Act1	4.6G	79.9	19.3	41.6	46.0	32.8

Table 6: The robustness generalization of different models when DeiT-S serves as the teacher model. The results of DeiT-S here are included for reference; it is trained by the default recipe without knowledge distillation.

Student Architecture	FLOPs	IN (↑)	S-IN (↑)	IN-C (↓)	IN-R (↑)	IN-SK (↑)
DeiT-S	4.6G	79.8	16.2	42.8	41.9	29.1
ResNet-DW	4.8G	79.5	10.2	50.8	40.9	28.9
Robust-ResNet-DW	4.5G	79.3	20.1	41.2	46.5	33.2
ResNet-Inverted-DW	4.6G	80.1	11.0	47.9	42.4	30.4
Robust-ResNet-Inverted-DW	4.6G	79.1	19.4	42.4	45.9	33.0
ResNet-UpInvertedDW	4.7G	79.9	14.1	48.4	43.6	31.0
Robust-ResNet-Up-Inverted-DW	4.4G	79.3	19.6	41.1	49.3	35.4
ResNet-DownInvertedDW	4.5G	79.7	12.3	48.5	42.3	30.4
Robust-ResNet-Down-Inverted-DW	4.6G	79.9	18.9	41.0	46.4	33.5

malization layers also reduce GPU memory usage and accelerate training (e.g., up to 23% speed up simply by removing a few normalization layers) (Gitman & Ginsburg, 2017; Brock et al., 2021).

5 Components Combination

In this section, we explore the impact of combining all the proposed components on the model's performance. Specifically, we adopt a 16×16 patchify stem and an 11×11 kernel size, along with the corresponding optimal position for placing normalization and activation layer for all architectures. A exception is ResNet-Inverted-DW, for which we use 7×7 kernel size as we empirically find using too large kernel size (e.g., 11×11) can lead to unstable training. As shown in Tab. 5, and Tab. 9, Tab. 10, Tab. 11 in Appendix A.3, *we can see these simple designs not only work well when individually applied to ResNet, but work even better when used together*. Moreover, by employing all three designs, ResNet now beats DeiT on all four out-of-distribution benchmarks. These results reinforce the efficacy of our proposed architecture designs, and suggest that a pure CNN without any self-attention-like block achieves just as good robustness as ViT.

For brevity, we refer to ResNet-DW with our choice of ViT-style patchify stem, large kernel size, and fewer activation and normalization layers as Robust-ResNet-DW (and similar for others).

6 KNOWLEDGE DISTILLATION

Knowledge Distillation (Hinton et al., 2015) is a training heuristic aiming at transferring the knowledge of a stronger teacher model to a weaker student model with lower capacity. Usually, the student model can achieve better or at least similar performance than the teacher model in knowledge distillation. Yet, directly employing knowledge distillation to let ResNet-50 (student model) learn from DeiT-S (teacher model) has been found to be less effective: ResNet50 still underperforms DeiT-S by a significant margin; While surprisingly, when the model roles are switched, the student model DeiT-S is still able to remarkably outperform the teacher model ResNet-50 (Bai et al., 2021). It is therefore concluded that the key to achieving good robustness of DeiT lies in its architecture that cannot be transferred to ResNet via knowledge distillation. We run these experiments again with our training recipe and models with all three architectural designs combined. We can clearly conclude from Tab. 6 that with the help of our proposed architectural elements from ViT, a ResNet does perform better than DeiT on out-of-distribution samples. In contrast, the baseline models, though attaining good performance on clean ImageNet, are not as robust as the teacher model DeiT-S.

7 LARGER MODELS

So far, we have only demonstrated the effectiveness of our proposed models on a relatively small model scale. To show that they are also beneficial to larger models, we adjust our models to match the total FLOPs of DeiT-Base. Specifically, we change the base channel dimensions to (128, 256, 512, and 1024), and add over 20 blocks in stage 3 of the network. We then train it with the ConvNeXT-B recipe (Liu et al., 2022) and compare its performance with DeiT-Base, as shown in Tab. 7. We have also tried directly applying the DeiT recipe and found that it brings little improvement. As can be seen from Tab. 7, our proposed Robust-ResNet-Base models still perform favorably against DeiT-B, indicating the great potential of our method when scaling up models.

Table 7: Comparing the robustness of Robust-ResNet and DeiT at a larger scale.

Architecture	FLOPs	IN (↑)	S-IN (↑)	IN-C (↓)	IN-R (↑)	IN-SK (↑)
ResNet-200	15.1G	81.7	13.8	42.2	45.1	34.5
DeiT-B	17.6G	81.8	19.6	37.9	44.7	32.0
Robust-ResNet-DW-B	17.2G	80.5	19.2	38.8	46.6	34.2
Robust-ResNet-Inverted-DW-B	17.1G	81.6	22.1	35.5	50.2	36.7
Robust-ResNet-Up-Inverted-DW-B	17.1G	81.9	23.1	35.1	50.5	37.1
Robust-ResNet-Down-Inverted-DW-B	17.3G	81.3	22.2	35.6	49.7	37.8

8 CONCLUSION

While the recent work (Bai et al., 2021) concludes that Transformers are more robust than CNNs on out-of-distribution samples, it also suggests that Transformer's self-attention-like architectures are the key. In this paper, we take a closer look at the Transformer architecture, and find several useful designs other than the self-attention block. We find that combining these designs and introducing them into ResNet can lead to a pure CNN architecture that can be as robust as, sometimes even more robust than, a Vision Transformer model of the same scale. We hope our results can encourage the community to rethink the robustness comparison between Transformers and CNNs, and, meanwhile, help the community re-examine and better understand robust architecture design.

ACKNOWLEDGEMENT

This work is supported by a gift from Open Philanthropy, TPU Research Cloud (TRC) program, and Google Cloud Research Credits program.

REFERENCES

Yutong Bai, Jieru Mei, Alan Yuille, and Cihang Xie. Are transformers more robust than cnns? In *NeurIPS*, 2021.

Hangbo Bao, Li Dong, and Furu Wei. BEiT: BERT pre-training of image transformers. In *ICLR*, 2022.

Rishi Bommasani, Drew A Hudson, Ehsan Adeli, Russ Altman, Simran Arora, Sydney von Arx, Michael S Bernstein, Jeannette Bohg, Antoine Bosselut, Emma Brunskill, et al. On the opportunities and risks of foundation models. *arXiv preprint arXiv:2108.07258*, 2021.

Andy Brock, Soham De, Samuel L Smith, and Karen Simonyan. High-performance large-scale image recognition without normalization. In *ICML*, 2021.

Tom B Brown, Benjamin Mann, Nick Ryder, Melanie Subbiah, Jared Kaplan, Prafulla Dhariwal, Arvind Neelakantan, Pranav Shyam, Girish Sastry, Amanda Askell, et al. Language models are few-shot learners. In *NeurIPS*, 2020.

Mathilde Caron, Hugo Touvron, Ishan Misra, Hervé Jégou, Julien Mairal, Piotr Bojanowski, and Armand Joulin. Emerging properties in self-supervised vision transformers. In *ICCV*, 2021.

Xinlei Chen, Saining Xie, and Kaiming He. An empirical study of training self-supervised vision transformers. In *ICCV*, 2021.

Ekin D Cubuk, Barret Zoph, Jonathon Shlens, and Quoc V Le. Randaugment: Practical data augmentation with no separate search. In *NeurIPS*, 2020.

Zihang Dai, Zhilin Yang, Yiming Yang, Jaime Carbonell, Quoc V Le, and Ruslan Salakhutdinov. Transformer-xl: Attentive language models beyond a fixed-length context. In *ACL*, 2019.

Jacob Devlin, Ming-Wei Chang, Kenton Lee, and Kristina Toutanova. Bert: Pre-training of deep bidirectional transformers for language understanding. In *NAACL-HLT*, 2019.

Xiaohan Ding, Xiangyu Zhang, Ningning Ma, Jungong Han, Guiguang Ding, and Jian Sun. Repvgg: Making vgg-style convnets great again. In *Proceedings of the IEEE/CVF conference on computer vision and pattern recognition*, pp. 13733–13742, 2021.

Xiaohan Ding, Honghao Chen, Xiangyu Zhang, Jungong Han, and Guiguang Ding. Repmlpnet: Hierarchical vision mlp with re-parameterized locality. In *Proceedings of the IEEE/CVF Conference on Computer Vision and Pattern Recognition*, pp. 578–587, 2022a.

Xiaohan Ding, Xiangyu Zhang, Jungong Han, and Guiguang Ding. Scaling up your kernels to 31x31: Revisiting large kernel design in cnns. In *Proceedings of the IEEE/CVF Conference on Computer Vision and Pattern Recognition*, pp. 11963–11975, 2022b.

Alexey Dosovitskiy, Lucas Beyer, Alexander Kolesnikov, Dirk Weissenborn, Xiaohua Zhai, Thomas Unterthiner, Mostafa Dehghani, Matthias Minderer, Georg Heigold, Sylvain Gelly, et al. An image is worth 16x16 words: Transformers for image recognition at scale. In *ICLR*, 2020.

Robert Geirhos, Patricia Rubisch, Claudio Michaelis, Matthias Bethge, Felix A Wichmann, and Wieland Brendel. Imagenet-trained cnns are biased towards texture; increasing shape bias improves accuracy and robustness. In *ICLR*, 2018.

Igor Gitman and Boris Ginsburg. Comparison of batch normalization and weight normalization algorithms for the large-scale image classification. *arXiv preprint arXiv:1709.08145*, 2017.

Benjamin Graham, Alaaeldin El-Nouby, Hugo Touvron, Pierre Stock, Armand Joulin, Hervé Jégou, and Matthijs Douze. Levit: a vision transformer in convnet's clothing for faster inference. In *ICCV*, 2021.

Kaiming He, Xiangyu Zhang, Shaoqing Ren, and Jian Sun. Deep residual learning for image recognition. In *CVPR*, 2016.

Kaiming He, Xinlei Chen, Saining Xie, Yanghao Li, Piotr Dollár, and Ross Girshick. Masked autoencoders are scalable vision learners. In *CVPR*, 2022.

Dan Hendrycks and Thomas G Dietterich. Benchmarking neural network robustness to common corruptions and surface variations. In *ICLR*, 2018.

Dan Hendrycks, Steven Basart, Norman Mu, Saurav Kadavath, Frank Wang, Evan Dorundo, Rahul Desai, Tyler Zhu, Samyak Parajuli, Mike Guo, et al. The many faces of robustness: A critical analysis of out-of-distribution generalization. In *ICCV*, 2021.

Geoffrey Hinton, Oriol Vinyals, and Jeff Dean. Distilling the knowledge in a neural network. In *NeurIPS Workshop*, 2015.

Elad Hoffer, Tal Ben-Nun, Itay Hubara, Niv Giladi, Torsten Hoefler, and Daniel Soudry. Augment your batch: Improving generalization through instance repetition. In *CVPR*, 2020.

Gao Huang, Yu Sun, Zhuang Liu, Daniel Sedra, and Kilian Q Weinberger. Deep networks with stochastic depth. In *ECCV*, 2016.

Alex Krizhevsky, Ilya Sutskever, and Geoff Hinton. Imagenet classification with deep convolutional neural networks. In *NeurIPS*, 2012.

Ze Liu, Yutong Lin, Yue Cao, Han Hu, Yixuan Wei, Zheng Zhang, Stephen Lin, and Baining Guo. Swin transformer: Hierarchical vision transformer using shifted windows. In *ICCV*, 2021.

Zhuang Liu, Hanzi Mao, Chao-Yuan Wu, Christoph Feichtenhofer, Trevor Darrell, and Saining Xie. A convnet for the 2020s. In *CVPR*, 2022.

Ilya Loshchilov and Frank Hutter. Decoupled weight decay regularization. In *ICLR*, 2019.

Sayak Paul and Pin-Yu Chen. Vision transformers are robust learners. In *AAAI*, 2022.

Alec Radford, Karthik Narasimhan, Tim Salimans, and Ilya Sutskever. Improving language understanding by generative pre-training. https://s3-us-west-2.amazonaws.com/openai-assets/research-covers/language-unsupervised/language_understanding_paper.pdf, 2018.

Alec Radford, Jeffrey Wu, Rewon Child, David Luan, Dario Amodei, and Ilya Sutskever. Language models are unsupervised multitask learners. *OpenAI blog*, 2019.

Mark Sandler, Andrew Howard, Menglong Zhu, Andrey Zhmoginov, and Liang-Chieh Chen. Mobilenetv2: Inverted residuals and linear bottlenecks. In *CVPR*, 2018.

Rulin Shao, Zhouxing Shi, Jinfeng Yi, Pin-Yu Chen, and Cho-Jui Hsieh. On the adversarial robustness of visual transformers. *arXiv preprint arXiv:2103.15670*, 2021.

Karen Simonyan and Andrew Zisserman. Very deep convolutional networks for large-scale image recognition. In *ICLR*, 2015.

Mingxing Tan and Quoc Le. Efficientnet: Rethinking model scaling for convolutional neural networks. In *ICML*, 2019.

Hugo Touvron, Matthieu Cord, Matthijs Douze, Francisco Massa, Alexandre Sablayrolles, and Hervé Jégou. Training data-efficient image transformers & distillation through attention. In *ICML*, 2021a.

Hugo Touvron, Matthieu Cord, Alexandre Sablayrolles, Gabriel Synnaeve, and Hervé Jégou. Going deeper with image transformers. In *ICCV*, 2021b.

Asher Trockman and J Zico Kolter. Patches are all you need? *arXiv preprint arXiv:2201.09792*, 2022.

Ashish Vaswani, Noam Shazeer, Niki Parmar, Jakob Uszkoreit, Llion Jones, Aidan N Gomez, Lukasz Kaiser, and Illia Polosukhin. Attention is all you need. In *NeurIPS*, 2017.

Haohan Wang, Songwei Ge, Zachary Lipton, and Eric P Xing. Learning robust global representations by penalizing local predictive power. *NeurIPS*, 2019.

Wenhai Wang, Enze Xie, Xiang Li, Deng-Ping Fan, Kaitao Song, Ding Liang, Tong Lu, Ping Luo, and Ling Shao. Pyramid vision transformer: A versatile backbone for dense prediction without convolutions. In *ICCV*, 2021.

Xiaolong Wang, Ross Girshick, Abhinav Gupta, and Kaiming He. Non-local neural networks. In *CVPR*, 2018.

Ross Wightman, Hugo Touvron, and Hervé Jégou. Resnet strikes back: An improved training procedure in timm. *arXiv preprint arXiv:2110.00476*, 2021.

Tete Xiao, Piotr Dollar, Mannat Singh, Eric Mintun, Trevor Darrell, and Ross Girshick. Early convolutions help transformers see better. *NeurIPS*, 2021.

Saining Xie, Ross Girshick, Piotr Dollár, Zhuowen Tu, and Kaiming He. Aggregated residual transformations for deep neural networks. In *CVPR*, 2017.

Zhenda Xie, Yutong Lin, Zhuliang Yao, Zheng Zhang, Qi Dai, Yue Cao, and Han Hu. Self-supervised learning with swin transformers. *arXiv preprint arXiv:2105.04553*, 2021.

Fuzhao Xue, Ziji Shi, Yuxuan Lou, Yong Liu, and Yang You. Go wider instead of deeper. *arXiv preprint arXiv:2107.11817*, 2021.

Zhilin Yang, Zihang Dai, Yiming Yang, Jaime Carbonell, Ruslan Salakhutdinov, and Quoc V Le. Xlnet: Generalized autoregressive pretraining for language understanding. In *NeurIPS*, 2019.

Li Yuan, Yunpeng Chen, Tao Wang, Weihao Yu, Yujun Shi, Zihang Jiang, Francis EH Tay, Jiashi Feng, and Shuicheng Yan. Tokens-to-token vit: Training vision transformers from scratch on imagenet. In *ICCV*, 2021.

Sangdoo Yun, Dongyoon Han, Seong Joon Oh, Sanghyuk Chun, Junsuk Choe, and Youngjoon Yoo. Cutmix: Regularization strategy to train strong classifiers with localizable features. In *ICCV*, 2019.

Xiaohua Zhai, Alexander Kolesnikov, Neil Houlsby, and Lucas Beyer. Scaling vision transformers. *arXiv preprint arXiv:2106.04560*, 2021.

Chongzhi Zhang, Mingyuan Zhang, Shanghang Zhang, Daisheng Jin, Qiang Zhou, Zhongang Cai, Haiyu Zhao, Shuai Yi, Xianglong Liu, and Ziwei Liu. Delving deep into the generalization of vision transformers under distribution shifts. In *CVPR*, 2022.

Hongyi Zhang, Moustapha Cisse, Yann N Dauphin, and David Lopez-Paz. mixup: Beyond empirical risk minimization. In *ICLR*, 2018.

Zhun Zhong, Liang Zheng, Guoliang Kang, Shaozi Li, and Yi Yang. Random erasing data augmentation. In *AAAI*, 2020.

Jinghao Zhou, Chen Wei, Huiyu Wang, Wei Shen, Cihang Xie, Alan Yuille, and Tao Kong. ibot: Image bert pre-training with online tokenizer. In *ICLR*, 2022.

A Appendix

A.1 Training Recipe Details

We follow the standard 300-epoch DeiT training recipe (Touvron et al., 2021a) in this work. Specifically, we train all models using AdamW optimizer (Loshchilov & Hutter, 2019); We set the initial base learning rate to 5e-4, and apply the cosine learning rate scheduler to decrease it; Besides weight decay, we additionally adopt six data augmentation & regularization strategies (i.e., RandAug (Cubuk et al., 2020), MixUp (Zhang et al., 2018), CutMix (Yun et al., 2019), Random Erasing (Zhong et al., 2020), Stochastic Depth (Huang et al., 2016), and Repeated Augmentation (Hoffer et al., 2020)) to regularize training.

A.2 More Stem Experiments

Recent findings also suggest replacing the ViT-style patchify stem with a small number of stacked 2-stride 3×3 convolution layers can greatly ease optimization and thus boost the clean accuracy (Graham et al., 2021; Xiao et al., 2021). To verify its effectiveness on robustness benchmarks, we also implemented the convolution stem for ViT-S in (Graham et al., 2021), with a stack of 4 3×3 convolution layers with stride 2. The results are shown as follows in Tab. 8. Surprisingly, though the use of convolutional stem does attain higher clean accuracy, it appears to be not as helpful as ViT-style patchify stem on out-of-distribution robustness.

Table 8: The performance of different baseline models equipped with ViT-style patchify stem and convolution stem. "PX" refers to that the model has a ViT-style patchify stem with patch size set to X; "C" refers to that it has a convolutional stem.

Architecture	FLOPs	IN (↑)	S-IN (↑)	IN-C (↓)	IN-R (↑)	IN-SK (↑)
ResNet50	4.1G	78.4	9.9	51.2	39.2	27.7
DeiT-S	4.6G	79.8	16.2	42.8	41.9	29.1
ResNet-DW	4.8G	79.7	10.6	50.1	41.3	29.1
+ P16	4.6G	78.5	17.0	44.3	44.8	32.0
+ C	4.5G	79.6	16.2	48.4	43.0	30.2
ResNet-Inverted-DW	4.6G	80.0	10.8	47.7	41.9	29.4
+ P16	4.6G	78.1	17.4	42.9	44.7	32.4
+ C	4.6G	79.9	16.9	46.2	43.2	31.2
ResNet-Up-Inverted-DW	4.7G	79.7	12.9	47.9	42.9	30.8
+ P16	4.5G	77.9	17.0	43.9	44.6	32.0
+ C	4.5G	79.1	16.6	48.4	43.2	30.3
ResNet-Down-Inverted-DW	4.5G	79.6	12.1	49.0	42.5	29.5
+ P16	4.6G	78.0	16.2	43.8	43.8	30.6
+ C	4.6G	79.3	16.4	49.0	42.4	29.2

A.3 More Components Combination Experiments

Here we show more results of combining different components proposed in this paper in Tab. 9, Tab. 10, and Tab. 11.

A.4 More comparison with Other Models

Besides DeiT, here we also evaluate our proposed Robust-ResNet against two state-of-the-art models, ConvNeXt (Liu et al., 2022) and Swin-Transformer (Liu et al., 2021), in terms of out-of-distribution robustness. As shown in Tab. 12, all four of our models perform similarly to, or better than ConvNeXt or Swin-Transformer in all out-of-distribution tests.

A.5 Repeating Experiments

In the above experiments, we report the result of a single run with a fixed random seed. In order to demonstrate the statistical significance of the robustness improvements brought by our proposed components, we conduct three runs with different random seeds and report the mean and standard deviation in Tab. 13. We observe only small variations across the three runs, which confirms the consistent and reliable performance gains achieved by our proposed models.

A.6 ImageNet-A Evaluation

The ImageNet-A dataset comprises a set of natural adversarial samples that considerably degrade the performance of machine learning models. In Tab. 14, we compare the performance of our Robust-ResNet models and DeiT on the ImageNet-A dataset. Notably, while the Robust-ResNet models do not perform as well as DeiT with an input resolution of 224, increasing the input resolution (e.g., to

Table 9: The performance of different baseline models equipped with ViT-style patchify stem and large kernel size. The models with the suffix "PX" refers to that it has a ViT-style patchify stem with patch size set to X. "KX" refers to that the model uses blocks with a depth-wise convolution layer with kernel size X.

Architecture	FLOPs	IN (↑)	S-IN (↑)	IN-C (↓)	IN-R (↑)	IN-SK (↑)
ResNet50	4.1G	78.4	9.9	51.2	39.2	27.7
DeiT-S	4.6G	79.8	16.2	42.8	41.9	29.1
ResNet-DW	4.8G	79.7	10.6	50.1	41.3	29.1
+ P16 + K11	4.5G	79.0	18.8	42.5	45.2	32.4
ResNet-Inverted-DW	4.6G	80.0	10.8	47.7	41.9	29.4
+ P16 + K7	4.6G	79.2	19.8	41.1	46.4	33.7
ResNet-Up-Inverted-DW	4.7G	79.7	12.9	47.9	42.9	30.8
+ P16 + K11	4.4G	78.0	17.2	43.7	47.1	31.2
ResNet-Down-Inverted-DW	4.5G	79.6	12.1	49.0	42.5	29.5
+ P16 + K11	4.6G	78.1	18.9	43.7	42.9	29.6

Table 10: The performance of different baseline models equipped with ViT-style patchify stem and fewer activation and normalization layers. The model with the suffix "PX" refers to that it has a ViT-style patchify stem with patch size set to X. "NormXActY" refers to that the model has only one normalization layer after the Xth convolution layer and one activation layer after the Yth convolution layer in the block.

Architecture	FLOPs	IN (↑)	S-IN (↑)	IN-C (↓)	IN-R (↑)	IN-SK (↑)
ResNet50	4.1G	78.4	9.9	51.2	39.2	27.7
DeiT-S	4.6G	79.8	16.2	42.8	41.9	29.1
ResNet-DW	4.8G	79.7	10.6	50.1	41.3	29.1
+ P16 + Norm1Act3	4.6G	78.7	16.2	43.0	46.3	33.1
ResNet-Inverted-DW	4.6G	80.0	10.8	47.7	41.9	29.4
+ P16 + Norm1Act1	4.6G	79.3	17.5	41.7	46.1	32.9
ResNet-Up-Inverted-DW	4.7G	79.7	12.9	47.9	42.9	30.8
+ P16 + Norm1Act2	4.5G	79.1	18.6	41.5	48.0	33.8
ResNet-Down-Inverted-DW	4.5G	79.6	12.1	49.0	42.5	29.5
+ P16 + Norm1Act1	4.6G	79.7	18.0	40.7	47.1	33.4

Table 11: The performance of different baseline models equipped with large kernel size and fewer activation and normalization layers. "KX" refers to that the model uses blocks with a depth-wise convolution layer with kernel size X. "NormXActY" refers to the model has only one normalization layer after the Xth convolution layer and one activation layer after the Yth convolution layer in the block.

Architecture	FLOPs	IN (↑)	S-IN (↑)	IN-C (↓)	IN-R (↑)	IN-SK (↑)
ResNet50	4.1G	78.4	9.9	51.2	39.2	27.7
DeiT-S	4.6G	79.8	16.2	42.8	41.9	29.1
ResNet-DW	4.8G	79.7	10.6	50.1	41.3	29.1
+ K11 + Norm1Act3	5.0G	80.4	13.3	45.2	43.9	30.8
ResNet-Inverted-DW	4.6G	80.0	10.8	47.7	41.9	29.4
+ K7 + Norm1Act1	5.0G	80.8	13.1	46.7	45.7	32.1
ResNet-Up-Inverted-DW	4.7G	79.7	12.9	47.9	42.9	30.8
+ K11 + Norm1Act2	4.9G	81.4	15.8	42.9	48.3	33.8
ResNet-Down-Inverted-DW	4.5G	79.6	12.1	49.0	42.5	29.5
+ K11 + Norm1Act1	4.6G	81.3	14.2	43.6	46.1	32.8

Table 12: Robustness comparison against two state-of-the-art models, ConvNeXT and Swin-Transformer.

Architecture	FLOPs	IN (↑)	S-IN (↑)	IN-C (↓)	IN-R (↑)	IN-SK (↑)
ConvNeXt-T	4.5G	82.1	18.9	41.6	47.2	33.9
Swin-T	4.5G	81.4	15.5	48.4	41.3	29.3
Robust-ResNet-DW	4.5G	79.4	18.6	42.3	45.9	33.0
Robust-ResNet-Inverted-DW	4.6G	79.0	19.5	42.1	45.9	32.8
Robust-ResNet-Up-Inverted-DW	4.4G	79.2	20.2	40.9	48.7	35.2
Robust-ResNet-Down-Inverted-DW	4.6G	79.9	19.3	41.6	46.0	32.8

Table 13: The results of repeating experiments in Tab. 5 three times with different random seeds. It can be observed that all Robust-ResNet variants bring statistically stable robustness improvement.

Architecture	FLOPs	IN (↑)	S-IN (↑)	IN-C (↓)	IN-R (↑)	IN-SK (↑)
ResNet50	4.1G	78.4	9.9	51.2	39.2	27.7
DeiT-S	4.6G	79.8	16.2	42.8	41.9	29.1
ResNet-DW	4.8G	79.7	10.6	50.1	41.3	29.1
Robust-ResNet-DW	4.5G	79.3±0.1	19.2±0.6	41.7±0.6	46.0±0.1	32.6±0.3
ResNet-Inverted-DW	4.6G	80.0	10.8	47.7	41.9	29.4
Robust-ResNet-Inverted-DW	4.6G	79.2±0.2	19.8±0.6	41.9±0.2	45.8±0.1	32.6±0.1
ResNet-Up-Inverted-DW	4.7G	79.7	12.9	47.9	42.9	30.8
Robust-ResNet-Up-Inverted-DW	4.4G	79.3±0.1	19.6±0.4	41.2±0.4	48.7±0.1	35.0±0.1
ResNet-Down-Inverted-DW	4.5G	79.6	12.1	49.0	42.5	29.5
Robust-ResNet-Down-Inverted-DW	4.6G	79.7±0.1	19.5±0.2	41.8±0.2	46.0±0.1	33.0±0.1

Table 14: Robustness comparison on ImageNet-A.

Model	Resolution	
	224	320
ResNet50	7.0	15.5
DeiT-S	19.9	23.6
Robust-ResNet-DW	12.3	19.9
Robust-ResNet-Inverted-DW	11.8	22.3
Robust-ResNet-Up-Inverted-DW	12.5	19.0
Robust-ResNet-Down-Inverted-DW	14.0	21.2

320) significantly narrows the gap between Robust-ResNet and DeiT on ImageNet-A. We conjecture this is because objects of interest in ImageNet-A are smaller than in standard ImageNet.

A.7 Structural Re-parameterization

A line of recent works promotes the idea of a training-time multi-branch but inference-time plain model architecture via structural re-parameterization (Ding et al., 2021; 2022a;b). RepLKNet (Ding et al., 2022b), in particular, has shown that re-parameterization using small kernels can alleviate the optimization issue associated with large-kernel convolution layers, without incurring additional inference costs. Given the Robust-ResNet models also adopt large kernels, we also try the idea of structural re-parameterization and leverage a multi-branch block architecture at training to further enhance model performance. The block architecture details are shown in Fig. 5. The results of two different model scales, shown as in Tab. 15 and Tab. 16, demonstrate generally improved performance with this re-parameterization approach. One exception may be Robust-ResNet-Up-Inverted-DW, which sometimes exhibits slightly worse robustness with re-parameterization. Notably, with the re-parameterization technique, we are able to train the Robust-ResNet-Inverted-DW model using a kernel size of 11.

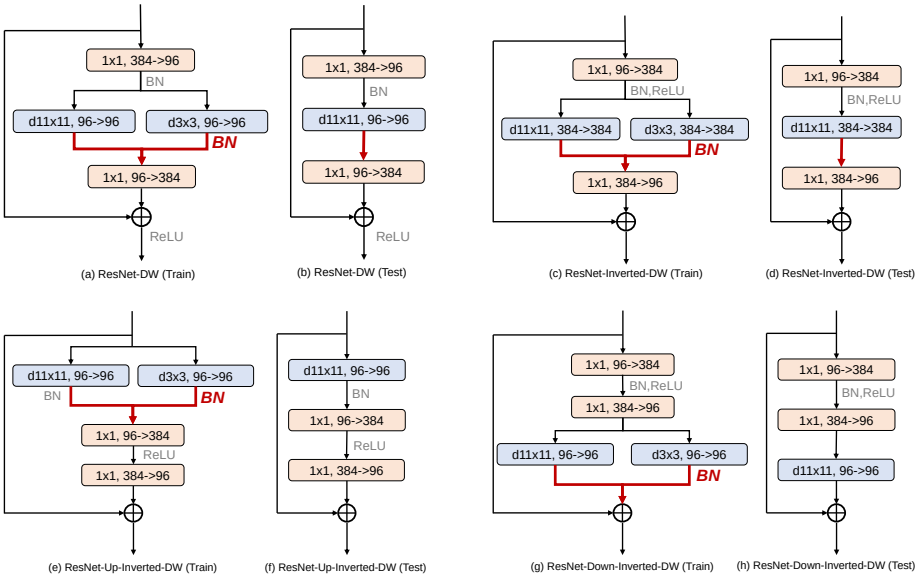

Figure 5: Architectures of four CNN block instantiations with structural reparameterization.

Table 15: The performance of Robust-ResNet models trained with structural re-parameterization technique at the scale of DeiT-S.

Architecture	FLOPs	IN (↑)	S-IN (↑)	IN-C (↓)	IN-R (↑)	IN-SK (↑)
ResNet50	4.1G	78.4	9.9	51.2	39.2	27.7
DeiT-S	4.6G	79.8	16.2	42.8	41.9	29.1
Robust-ResNet-DW	4.5G	79.4	18.6	42.3	45.9	33.0
+ Re-param	4.5G	79.6	19.0	41.1	47.8	34.2
Robust-ResNet-Inverted-DW	4.6G	79.0	19.5	42.1	45.9	32.8
+ Re-param	4.6G	79.2	20.1	42.0	47.2	34.4
Robust-ResNet-Up-Inverted-DW	4.4G	79.2	20.2	40.9	48.7	35.2
+ Re-param	4.4G	79.4	18.5	41.4	48.7	34.6
Robust-ResNet-Down-Inverted-DW	4.6G	79.9	19.3	41.6	46.0	32.8
+ Re-param	4.6G	80.7	21.2	38.1	49.0	34.9

Table 16: The performance of Robust-ResNet models trained with structural re-parameterization technique at the scale of DeiT-B.

Architecture	FLOPs	IN (↑)	S-IN (↑)	IN-C (↓)	IN-R (↑)	IN-SK (↑)
ResNet-200	15.1G	81.7	13.8	42.2	45.1	34.5
DeiT-B	17.6G	81.8	19.6	37.9	44.7	32.0
Robust-ResNet-DW-B	17.2G	80.5	19.2	38.8	46.6	34.2
+ Re-param	17.2G	80.8	20.1	38.6	47.5	35.4
Robust-ResNet-Inverted-DW-B	17.1G	81.6	22.1	35.5	50.2	36.7
+ Re-param	17.1G	82.1	23.1	35.4	50.7	37.4
Robust-ResNet-Up-Inverted-DW-B	17.1G	81.9	23.1	35.1	50.5	37.1
+ Re-param	17.1G	82.2	22.9	34.5	50.6	37.8
Robust-ResNet-Down-Inverted-DW-B	17.3G	81.3	22.2	35.6	49.7	37.8
+ Re-param	17.3G	81.6	22.0	34.9	51.1	38.1