Multimodal Schema-Agnostic Learning on Relational Databases

Joeseph Meyer[*]
SAP
Palo Alto, CA, USA
joseph.meyer@sap.com

Divyansha Lachi[*,†]
University of Pennsylvania
Philadelphia, PA, USA
div11@upenn.edu

Mohammadi Reza
SAP
Seattle, WA, USA
reza.mohammadi@sap.com

Roshan Reddy Upendra
SAP
Palo Alto, CA, USA
roshan.reddy.upendra@sap.com

Eva L. Dyer
University of Pennsylvania
Philadelphia, PA, USA
eva.dyer@upenn.edu

Mark Li
SAP
Seattle, WA, USA
mark.li01@sap.com

Tom Palczewski
SAP
Palo Alto, CA, USA
tom.palczewski@sap.com

Abstract

Relational multi-table data is common in domains such as e-commerce, healthcare, and scientific research, and can be naturally represented as heterogeneous temporal graphs with multi-modal node attributes. Existing graph neural networks (GNNs) rely on schema-specific feature encoders, requiring separate modules for each node type and feature column, which hinders scalability and parameter sharing. We introduce **RELATE** (Relational Encoder for Latent Aggregation of Typed Entities), a schema-agnostic, plug-and-play feature encoder that can be used with any general purpose GNN. RELATE employs shared modality-specific encoders for categorical, numerical, textual, and temporal attributes, followed by a Perceiver-style cross-attention module that aggregates features into a fixed-size, permutation-invariant node representation. We evaluate RELATE on ReLGNN and HGT in the RelBench benchmark, where it achieves performance within 3% of schema-specific encoders while reducing parameter counts by up to 5x. This design supports varying schemas and enables multi-dataset pretraining for general-purpose GNNs, paving the way toward foundation models for relational data.

1 Introduction

Learning from relational multi-table data is a core challenge in domains such as e-commerce, healthcare, finance, and scientific discovery [1]. This data can be naturally represented as heterogeneous temporal graphs, where nodes and edges have different types and attributes span multiple modalities—including text, time-series, and numerical values. Effectively modeling such relational data requires handling diverse schemas and capturing high-dimensional, multimodal inputs associated with each node type.

Recent graph neural networks (GNNs) such as HGT [4] and RelGNN [10] have shown promising results on individual relational datasets. However, these models require separate encoders for each node type and feature column, leading to architectures that (i) scale poorly with the number of

AI for Tabular Data Workshop
39th Conference on Neural Information Processing Systems (EurIPS 2025).

columns, (ii) incur high memory and parameter costs, and (iii) inhibit generalization to new datasets with unseen schemas. As a result, these models are not well-suited for foundation model training, where a single model must handle diverse and non-aligned feature spaces across datasets. To address these challenges, we introduce the **RELATE** (Relational Encoder for Latent Aggregation of Typed Entities), a schema-agnostic feature encoder designed for relational data with multimodal node features. RELATE uses modality-specific modules shared across all columns of the same type (e.g., categorical, numerical, textual), followed by a Perceiver-style cross-attention layer [5] that compresses the set of column embeddings into a compact, fixed-size representation per node. This design is permutation-invariant to column order, accommodates varying schemas across node types, and scales to datasets with hundreds of features by attending from a small number of learnable latent queries.

We evaluate RELATE on a wide range of classification and regression tasks from the RelBench benchmark [10], comparing against schema-specific encoders used in prior relational frameworks. RELATE achieves performance on par (within 3%) with task-specific encoders on while reducing parameter count in datasets with a large number of features. Its schema-agnostic integration into existing architectures and paves the way toward general-purpose relational foundation models.

Our contributions are as follows: We propose **RELATE**, a schema-agnostic encoder for heterogeneous temporal graphs that replaces per-column and per-type encoders with shared modality-specific modules, and uses a Perceiver-style cross-attention bottleneck to summarize variable-length column embeddings into fixed-size node representations. RELATE generates fixed-size node embeddings that integrate seamlessly with existing GNN architectures (e.g., HGT, RelGNN), enabling plug-and-play use. We show that RELATE achieves strong performance across diverse tasks in the RelBench benchmark—within 3% of task-specific encoders for classification—while reducing parameter count by up to *5x*.

2 Background

Relational databases are widely used in domains such as finance, healthcare, and human resources. Traditional pipelines rely on costly joins to flatten relational data into a single feature matrix. Relational Deep Learning (RDL) instead exploits the relational schema directly, learning from interconnected tables without materializing large joins [10].

From relational data to graphs. Let a database be $(\mathcal{T}, \mathcal{R})$, where $\mathcal{T} = \{T_1, \ldots, T_n\}$ is a set of tables and $\mathcal{R} \subseteq \mathcal{T} \times \mathcal{T}$ encodes foreign-key $\rightarrow$ primary-key relations. Each table contains entities (rows) with identifiers, foreign keys, features, and timestamps. This structure is naturally modeled as a heterogeneous temporal graph $\mathcal{G} = (\mathcal{V}, \mathcal{E}, \phi, \psi, \tau)$, where nodes $\mathcal{V}$ are entities, directed edges $\mathcal{E} \subseteq \mathcal{V} \times \mathcal{V}$ represent relations, $\phi : \mathcal{V} \rightarrow \mathcal{T}_V$ and $\psi : \mathcal{E} \rightarrow \mathcal{T}_E$ assign node/edge types, and τ attaches timestamps to nodes or edges.

The standard encoder in RDL. The common practice is to give *each feature column* its own encoder and then concatenate the resulting embeddings. For a node v, let $\mathcal{C}_v$ be its set of feature columns. Each column $c \in \mathcal{C}_v$ is mapped to an embedding $\phi_c(\mathbf{x}_v^{(c)})$, where $\mathbf{x}_v^{(c)}$ is the raw value(s) of column c and ϕ_c is a *column-specific* encoder selected by modality (e.g., MLP for numeric, embedding lookup for categorical). A tabular backbone f_{tab} (often a ResNet [3]) is then applied before passing the result to a downstream GNN. While expressive, this design tightly couples the model to each schema: every new column introduces a new encoder (ϕ_c), and every node type typically requires its own backbone. This leads to parameter explosion in databases with hundreds of columns and hinders schema-agnostic pretraining across datasets.

3 Method

We propose **RELATE**, a schema-agnostic encoder for relational databases with high-dimensional, multimodal node features. RELATE is a plug-and-play feature encoder that enables multi-dataset pretraining for any general-purpose GNN model. RELATE consists of two key components: (i) a library of modality-specific encoders shared across all node types and columns, and (ii) a Perceiver-style cross-attention module that aggregates a variable-length set of column embeddings into a fixed-size embedding which serves as the initial node representation for the model.

3.1 Modality-Specific Encoders

We group all node features into four high-level modalities and apply a shared encoder for each: (i) **Numerical**, representing continuous scalar values such as age or price; (ii) **Timestamp**, capturing time-stamped information such as event times or birth dates; (iii) **Categorical**, covering discrete non-text attributes such as product category or gender; and (iv) **Textual**, handled by a pretrained text encoder for free-text fields or high-cardinality categorical attributes expressed in text. Features from each modality are processed by a dedicated encoder shared across all columns of that type. These encoders are conditioned on the column metadata through a shared text embedding model. The details can be found in A.1.3

3.2 Permutation-Invariant Column Aggregation

To transform a variable-length set of column embeddings into a fixed-size node representation, we adopt a cross-attention module inspired by PerceiverIO [5]. A shared sequence of L learnable latent tokens $\mathbf{Z} = [\mathbf{z}_1, \ldots, \mathbf{z}_L] \in \mathbb{R}^{L \times d}$ serves as queries, while the column embeddings for node v, $\mathbf{X}_v = [\mathbf{x}_1, \ldots, \mathbf{x}_{C_v}] \in \mathbb{R}^{C_v \times d}$, form the input sequence. Since $L \ll C_v$, this formulation reduces computational cost by decoupling self-attention from the number of input columns.

$$\mathbf{Z}_v \;=\; \mathbf{Z} + \mathrm{softmax}\left(\frac{\mathbf{Q}\mathbf{K}_v^\top}{\sqrt{d_k}}\right)\mathbf{V}_v, \tag{1}$$

where $\mathbf{Q} = \mathbf{W}_q\mathbf{Z}$, $\mathbf{K}_v = \mathbf{W}_k\mathbf{X}_v$, and $\mathbf{V}_v = \mathbf{W}_v\mathbf{X}_v$. This operation is permutation-invariant to the input column order and enables flexible adaptation to nodes with different schemas and numbers of attributes. Following this compression, N layers of self-attention are applied to the latent tokens to produce the final node representation $\mathbf{z}_v$. Permutation invariance is especially valuable when training across datasets with overlapping but non-identical schemas.

4 Results

We evaluate RELATE on RelBench [10], a recently introduced benchmark for relational deep learning that spans real-world datasets across domains such as e-commerce, healthcare, and finance. These datasets are structured as heterogeneous temporal graphs with multiple node and edge types and rich, multimodal attributes. Our experiments cover two tasks: node classification and node regression. We report Area Under the ROC Curve (AUC) for classification and Mean Absolute Error (MAE) for regression. To ensure a fair comparison, all models are trained using the same splits and optimization protocols defined in the benchmark [10]. We integrate RELATE into two widely-used architectures—Heterogeneous Graph Transformer (HGT) [4] and RelGNN [10]—demonstrating compatibility with standard backbones. We compare against the default heteroencoder used in RelBench [3], which uses distinct encoders for each node type and column. RELATE instantiates only a single backbone encoder across all node types and shares weights for each modality encoder across node types.

4.1 Experimental Setup

We implement RELATE within the RDL pipeline [10] by replacing the original heteroencoder with our architecture. We preserve the underlying task logic and training infrastructure. RELATE is trained using the AdamW optimizer [8] with a fixed learning rate of 5×10^{-3}. All other settings, such as batch size and dropout remain fixed across datasets. Similarly, we fix the embedding dimension to 128. Rather than perform exhaustive hyperparameter tuning, we examine the architecture's ability to learn in variable schemas. More information can be found in the appendix in A.1

4.2 Performance Comparison

On average, RELATE achieves accuracy within 3% of dataset-specific encoders for HGT and RelGNN respectively on classification tasks, despite using a shared, schema-agnostic architecture. Table 1 reports per-task metrics (AUROC or MAE).

Table 1: **Results on RelBench for Standard Encoder v/s RELATE** We evaluate HGT and RelGNN with two feature encoders: Standard and RELATE. Classification uses AUC (higher is better); regression uses MAE (lower is better). Δ is RELATE−Standard.

Dataset	Task	HGT			RelGNN		
		Standard	RELATE	Δ (RELATE−Standard)	Standard	RELATE	Δ (RELATE−Standard)
Classification — AUC							
rel-f1	driver-dnf	0.7337	0.6653	-0.0684	0.7135	0.6892	-0.0243
rel-f1	driver-top3	0.8297	0.4779	-0.3518	0.7701	0.6901	-0.0800
rel-avito	user-clicks	0.6490	0.6434	-0.0056	0.6590	0.6610	0.0020
rel-avito	user-visits	0.6459	0.6262	-0.0197	0.6620	0.6625	0.0005
rel-event	user-repeat	0.7351	0.7234	-0.0117	0.7551	0.6710	-0.0841
rel-event	user-ignore	0.8130	0.8510	0.0380	0.8035	0.8114	0.0079
rel-trial	study-outcome	0.6695	0.5979	-0.0716	0.6742	0.5838	-0.0904
rel-amazon	user-churn	0.6384	0.6548	0.0164	0.7033	0.6886	-0.0147
rel-amazon	item-churn	0.7529	0.7515	-0.0014	0.8283	0.8124	-0.0159
rel-stack	user-engagement	0.8723	0.8805	0.0082	0.9059	0.9010	-0.0049
rel-stack	user-badge	0.8227	0.8226	-0.0001	0.8890	0.8664	-0.0226
rel-hm	user-churn	0.6561	0.6525	-0.0036	0.6955	0.6937	-0.0018
Average Δ (AUC)				**-0.0393**			**-0.0274**
Regression — MAE							
rel-f1	driver-position	4.6649	6.1843	1.5194	4.2056	4.2621	0.0565
rel-avito	ad-ctr	0.0365	0.0382	0.0017	0.0424	0.0421	-0.0003
rel-trial	site-success	0.4244	0.4353	0.0109	0.3457	0.4191	0.0734
rel-stack	post-votes	0.0679	0.0679	0.0000	0.0652	0.0649	-0.0003
rel-hm	item-sales	0.0677	0.0708	0.0031	0.0556	0.0589	0.0033
Average Δ (MAE)				**0.3070**			**0.0265**

RELATE matches or slightly underperforms the RelBench heteroencoder on most tasks, while using a single backbone encoder across all node types and not being explicitly tied to any schema. Additionally, the number of learnable parameters is significantly smaller on several tasks, especially those with a large number of tables and features. For example, RELATE outperforms the comparison method on rel-event user-ignore while using only around 29% of learnable parameters compared to the heteroencoder. We find that RELATE performs generally on par with dataset-specific encoders on regression, however in the rel-f1 task RELATE under performs by a larger margin. We expect this is due to rel-f1 having a small number of train examples and a trade-off of single dataset performance and universality.

4.3 Parameter Efficiency

Figure 2A compares the number of trainable parameters between schema-specific encoders and RELATE across RelBench datasets (see Table 3 in Section A.3 for exact parameter counts) . RELATE maintains a nearly constant parameter footprint across datasets. In contrast, the parameter count of schema-specific encoders grows rapidly with the number of tables and features. As a result, RELATE achieves up to a **5× reduction in parameters** on feature-rich datasets such as *rel-trial* and *rel-event*, while remaining competitive in cases with fewer features. This stability makes RELATE particularly advantageous for real-world schemas involving hundreds or thousands of attributes, where schema-specific encoders become prohibitively large.

5 Conclusion

We introduced RELATE, a schema-agnostic encoder for heterogeneous temporal graphs that replaces per-column and per-type feature stacks with shared modality-specific modules and a Perceiver-style cross-attention bottleneck. By attending from a fixed set of latent tokens to variable-length column embeddings, RELATE achieves permutation invariance to column order and decouples the complexity of self-attention from the raw feature dimensionality of a node. We demonstrate its effectiveness as an encoder that achieves competitive accuracy while reducing parameter count. RELATE provides a foundation for learning across datasets and may serve as a building block for future multi-dataset pretraining for relational foundation models.

References

[1] E. F. Codd. A relational model of data for large shared data banks. *Communications of the ACM*, 13(6):377–387, 1970.

[2] Z. Hou, H. Li, Y. Cen, J. Tang, and Y. Dong. Graphalign: Pretraining one graph neural network on multiple graphs via feature alignment, 2024. arXiv preprint.

[3] W. Hu, Y. Yuan, Z. Zhang, A. Nitta, K. Cao, V. Kocijan, J. Sunil, J. Leskovec, and M. Fey. Pytorch frame: A modular framework for multi-modal tabular learning. *arXiv preprint arXiv:2404.00776*, 2024.

[4] Z. Hu, Y. Dong, K. Wang, and Y. Sun. Heterogeneous graph transformer. In *Proceedings of the Web Conference*, pages 2704–2710, 2020.

[5] A. Jaegle, S. Borgeaud, J.-B. Alayrac, C. Doersch, C. Ionescu, D. Ding, S. Koppula, D. Zoran, A. Brock, E. Shelhamer, et al. Perceiver io: A general architecture for structured inputs and outputs. *arXiv preprint arXiv:2107.14795*, 2021.

[6] D. Lachi, M. Azabou, V. Arora, and E. Dyer. Graphfm: A scalable framework for multi-graph pretraining. *arXiv preprint arXiv:2407.11907*, 2024. Preprint, under review.

[7] H. Liu, J. Feng, L. Kong, N. Liang, D. Tao, Y. Chen, and M. Zhang. One for all: Towards training one graph model for all classification tasks, 2023. Published as a conference paper at ICLR 2024.

[8] I. Loshchilov and F. Hutter. Decoupled weight decay regularization. *arXiv preprint arXiv:1711.05101*, 2017.

[9] H. Mao, Z. Chen, W. Tang, J. Zhao, Y. Ma, T. Zhao, N. Shah, M. Galkin, and J. Tang. Position: Graph foundation models are already here, 2024. Position paper, ICML 2024 (spotlight).

[10] J. Robinson, R. Ranjan, W. Hu, K. Huang, J. Han, A. Dobles, M. Fey, J. E. Lenssen, Y. Yuan, Z. Zhang, et al. Relbench: A benchmark for deep learning on relational databases. *Advances in Neural Information Processing Systems*, 37:21330–21341, 2024.

[11] M. Spinaci, M. Polewczyk, J. Hoffart, M. C. Kohler, S. Thelin, and T. Klein. Portal: Scalable tabular foundation models via content-specific tokenization, 2024. arXiv preprint.

[12] M. Spinaci, M. Polewczyk, M. Schambach, and S. Thelin. Contexttab: A semantics-aware tabular in-context learner, 2025. arXiv preprint.

[13] S. Tulkens and T. van Dongen. Model2vec: Fast state-of-the-art static embeddings. `https://github.com/MinishLab/model2vec`, 2024.

[14] Y. Wang, X. Wang, Q. Gan, M. Wang, Q. Yang, D. Wipf, and M. Zhang. Griffin: Towards a graph-centric relational database foundation model, 2025. arXiv preprint.

[15] T. Zhou, D. Fu, M. Soltanolkotabi, R. Jia, and V. Sharan. Fone: Precise single-token number embeddings via fourier features. *arXiv preprint arXiv:2502.09741*, 2025.

[16] B. Zhu, X. Shi, N. Erickson, M. Li, G. Karypis, and M. Shoaran. Xtab: Cross-table pretraining for tabular transformers, 2023. arXiv preprint.

A Appendix

A.1 Model Details

A.1.1 Model Overview

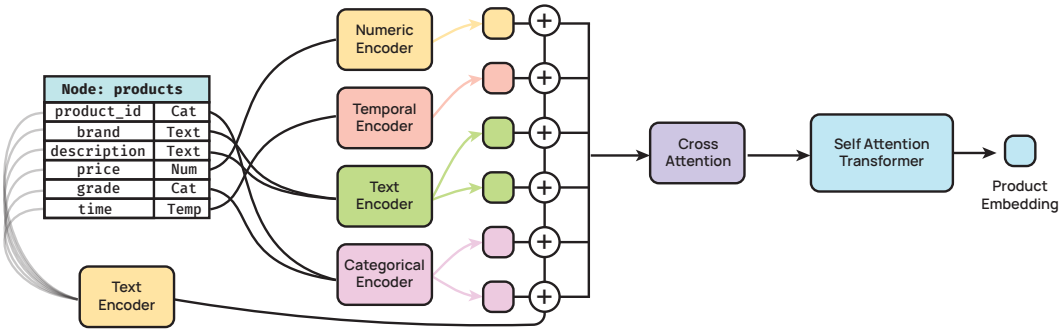

Figure 1: **Overview of the RELATE architecture.** Columns are encoded by shared modality-specific encoders, aggregated with column metadata, and summarized by a cross-attention transformer into fixed-size node embeddings for GNNs.

A.1.2 Hyperparameters

For both the full self-attention and cross-attention encoder variants, we fix the number of attention heads and layers to 4, apply a dropout rate of 0.2, and set the hidden dimension to 128. In the Perceiver encoder, the number of latent tokens is set to 8. All models are trained for up to 10 epochs. For the GNN backbone, we use 128 channels, a 2-hop neighborhood, and uniformly sample 128 neighbors per node.

A.1.3 Multimodal Featurization

For the numeric encoder, we use the Fourier Number Embedding (FoNE) encoder [15] to map continuous scalar values into dense embeddings. An optional shared linear projection maps the resulting embedding into the target space. By design, FoNE is schema-independent and can be applied to any numeric feature. For time, each timestamp is decomposed into interpretable components (year, month, day, etc.), then encoded using a combination of positional encodings (for absolute time) and cyclic encodings (for periodicity). A shared linear projection maps the encoded time features to the target embedding space. Categorical inputs are hashed into a shared vocabulary space, with the hash function conditioned on the column embedding. This allows identical values from different columns (e.g., "1") to map to distinct embeddings, ensuring both efficient use of the embedding space and semantic separation across columns. The categorical encoder is suited for anonymized fields such as hashed IDs common in real-world databases, while features with semantically meaningful values are instead processed by a pretrained text encoder. Textual columns are encoded with a pretrained sentence encoder [13], and a shared linear projection maps the resulting embeddings into the target dimension.

A.1.4 Column-Level Metadata Conditioning

To improve generalization across columns and datasets, we incorporate column-level metadata into each modality encoder. Column names, table names (node types), and optional descriptions are encoded with a pretrained text embedding model and injected into the feature encoding process, enabling the encoder to distinguish between semantically different columns that share the same modality and value space and to generalize to unseen schemas. We adopt different strategies for aggregating column metadata with cell embeddings depending on the modality; details are provided in Appendix A.1.5.

A.1.5 RELATE Column Meta Aggregation

We opt to aggregate column information for numeric and text columns by adding the multi-modal cell embedding to the projection of the column metadata (e.g., column name). Then, we input this into a two layer MLP with RELU activation. Specifically:

$$
\begin{aligned}
X &= \text{CellEmbeddings } W_{\text{shared}} \\
H &= \text{ColProj}(\text{ColumnEmbeddings}) \\
Z &= X + H \\
\tilde{Z} &= Z + \text{MLP}(Z), \quad \text{MLP}(Z) = \text{ReLU}(ZW_1 + b_1)W_2 + b_2
\end{aligned}
\tag{2}
$$

For hashed features we do not incorporate column metadata. Finally, for time columns we find gating to be effective. We apply the sigmoid function to the projection of the column embeddings. We multiply the result with the projection of the time embeddings.

$$
Z \;=\; \big(\text{CellEmbeddings}(W_{\text{shared}})\big) \;\odot\; \sigma\big(\text{ColProj}(\text{ColumnEmbeddings})\big) \tag{3}
$$

A.1.6 RELATE Cross-Attention

Here we describe the cross-attention performed by RELATE. *X* is the result of the multi-modal encoders described in 3.1. *X* contains an embedding for each cell according to its modality. *Q*, *K* ,and *V* are all projected using shared weights and *L* is initialized as a learnable parameter which represents the latent tokens. After cross-attention is performed, self-attention is executed on the latents. This process is performed for *N* layers.

$$
\begin{aligned}
Q &= LW_Q, \quad L \in \mathbb{R}^{B \times N_{\text{lat}} \times d} \\
K &= XW_K, \quad V = XW_V, \quad X \in \mathbb{R}^{B \times N_{\text{cells}} \times d} \\
\text{CrossAttn}(L, X) &= \text{softmax}\left(\frac{QK^\top}{\sqrt{d}}\right) V \\
L' &= L + \text{CrossAttn}(L, X) \\
L'' &= L' + \text{SelfAttn}(L')
\end{aligned}
\tag{4}
$$

A.2 Ablation Study

We evaluate the role of cross-attention by replacing it with a full self-attention (SA) mechanism applied over the input tokens. As shown in Figure 2B, we report the relative performance of self-attention for RelGNN, averaged over all classification tasks. This substitution yields marginal gains on a few datasets but does not consistently improve performance, with self-attention achieving only 90–101% of cross-attention on average. In contrast, the cross-attention bottleneck in RELATE provides a more efficient and scalable alternative, preserving accuracy while enabling training on large and feature-rich graphs. Comprehensive AUC and MAE results for both RelGNN and HGT are reported in Appendix A.2.

Table 2 reports the complete results of our attention ablation study, comparing the Perceiver-style cross-attention encoder with a full self-attention (SA) variant for both HGT and RelGNN across all RelBench datasets.

For classification tasks, we evaluate performance using AUC (higher is better). On average, cross-attention outperforms self-attention by $+0.0068$ AUC in HGT and $+0.0039$ AUC in RelGNN. While self-attention achieves marginal improvements on a few tasks, these gains are inconsistent and come with a substantial increase in computational cost.

For regression tasks, we report MAE (lower is better). Here, cross-attention again performs slightly better, reducing MAE by 0.0670 in HGT and 0.0160 in RelGNN on average.

Overall, the results confirm that the latent cross-attention bottleneck provides accuracy on par with or better than full self-attention while offering substantially higher efficiency, making it the preferable choice for training on large and feature-rich graphs.

Table 2: **Attention Ablation.** We compare full self-attention and cross-attention (Perceiver). Classification uses AUC (higher is better); regression uses MAE (lower is better). Δ is Perceiver$-$Full.

Dataset	Task	HGT			RelGNN		
		Full	Perceiver	Δ (Perceiver$-$Full)	Full	Perceiver	Δ (Perceiver$-$Full)
Classification — AUC							
rel-f1	driver-dnf	0.6359	0.6653	0.0294	0.6661	0.6892	0.0231
rel-f1	driver-top3	0.5609	0.4779	-0.0830	0.7227	0.6901	-0.0326
rel-avito	user-clicks	0.6316	0.6434	0.0118	0.6618	0.6610	-0.0008
rel-avito	user-visits	0.6272	0.6262	-0.0010	0.6627	0.6625	-0.0002
rel-event	user-repeat	0.6036	0.7234	0.1198	0.6554	0.6710	0.0156
rel-event	user-ignore	0.8412	0.8510	0.0098	0.8242	0.8114	-0.0128
rel-trial	study-outcome	0.5275	0.5979	0.0704	0.5311	0.5838	0.0527
rel-amazon	user-churn	0.6727	0.6548	-0.0179	0.6894	0.6886	-0.0008
rel-amazon	item-churn	0.7878	0.7515	-0.0363	0.8110	0.8124	0.0014
rel-stack	user-engagement	0.8780	0.8805	0.0025	0.9016	0.9010	-0.0006
rel-stack	user-badge	0.8236	0.8226	-0.0010	0.8668	0.8664	-0.0004
rel-hm	user-churn	0.6760	0.6525	-0.0235	0.6909	0.6937	0.0028
Average Δ (AUC)				**0.0068**			**0.0039**
Regression — MAE							
rel-f1	driver-position	6.5346	6.1843	-0.3503	4.3267	4.2621	-0.0645
rel-avito	ad-ctr	0.0387	0.0382	-0.0005	0.0415	0.0421	0.0006
rel-trial	site-success	0.4241	0.4353	0.0112	0.4339	0.4191	-0.0148
rel-stack	post-votes	0.0679	0.0679	0.0000	0.0651	0.0649	-0.0002
rel-hm	item-sales	0.0664	0.0708	0.0044	0.0600	0.0589	-0.0011
Average Δ (MAE)				**-0.0670**			**-0.0160**

A.3 Parameter Comparison

Table 3 reports the exact parameter counts corresponding to Figure 2. As shown, the parameter footprint of schema-specific encoders increases substantially with the number of tables and features in each dataset, ranging from 1.1M on *rel-amazon* to over 7.3M on *rel-trial*. In contrast, RELATE remains nearly constant at $\sim$1.4M parameters across all datasets, since it reuses a fixed set of modality-specific encoders. This property results in significant parameter savings—up to a **5× reduction** on feature-rich datasets such as *rel-trial* and *rel-event*—while still maintaining competitive performance.

Table 3: **Parameter comparison:** We compare the number of trainable parameters between the heteroencoder and RELATE Standard across datasets.

Dataset	# of Tables	# of Features	Std. Encoder (#params)	Universal (#params)	Universal / Std (%)
rel-amazon	3	15	1.08122×10^6	1.4713×10^6	136.078
rel-avito	8	43	2.04058×10^6	1.38483×10^6	67.8648
rel-event	5	128	4.96602×10^6	1.45178×10^6	29.2342
rel-f1	9	77	3.25939×10^6	1.45626×10^6	44.6788
rel-hm	3	37	1.968×10^6	1.4313×10^6	72.7285
rel-trial	15	140	7.29984×10^6	1.44026×10^6	19.73
rel-stack	7	51	2.62387e+06	1.457672×10^6	55.50

Figure 2: **(A)** Parameter comparison across RelBench datasets. We compare the number of trainable parameters between schema-specific encoders (Std) and RELATE. Schema-specific encoders grow with the number of tables and features, whereas RELATE maintains a nearly constant footprint. Percentages above the RELATE bars indicate the parameter ratio relative to schema-specific encoders. **(B)** Attention ablation for RelGNN, reporting average AUC performance relative to cross-attention. Bars show the performance of self-attention compared to cross-attention within each dataset.

A.3.1 Related Work

Recent models such as ConTextTab [12] and PORTAL [11] leverage table semantics, e.g., column headers, as context for cell values. Ablations showed that removing headers causes significant drops in performance, highlighting the importance of semantic metadata. These models typically use shared, modality-specific encoders for multi-modal values (numerical, categorical, text, temporal). ConTextTab, for example, scales numeric values, applies a learnable vector, encodes text with a pretrained language model, and sums embeddings for temporal components. Other approaches such as XTAB [16] pretrain only the transformer backbone while relying on dataset-specific feature preprocessing, which limits transfer across schemas. One of the key challenges of GFMs are to design architectures that can transfer across varying input spaces [9]. Recent homogeneous GFM models [6] demonstrate rapid transfer to downstream tasks after pretraining, but still rely on dataset-specific featurization that limits generalization and prevents true zero-shot transfer. RELATE addresses these limitations by introducing task-agnostic encoders that integrate directly with standard GNN backbones. The concurrent work Griffin [14] uses pretrained encoders for text and numeric features and applies cross-attention over cells, column metadata, and task information. Its feature encoders are task-conditioned and limited to text and numeric modalities, potentially conflating categorical IDs with text. Other GFMs, such as OFA [7], only operate on text-attributed graphs (TAGs). GraphAlign [2] aims to align feature distributions across across diverse graphs by leveraging mixture of experts (MOE), however the model is similarly limited to TAGs.