Unsupervised learning of features and object boundaries from local prediction

Anonymous Author(s)
Affiliation
Address
email

Abstract

A visual system has to learn both which features to extract from images and how to group locations into (proto-)objects. Those two aspects are usually dealt with separately, although predictability is discussed as a cue for both. To incorporate features and boundaries into the same model, we model a layer of feature maps with a pairwise Markov random field model in which each factor is paired with an additional binary variable, which switches the factor on or off. Using one of two contrastive learning objectives, we can learn both the features and the parameters of the Markov random field factors from images without further supervision signals. The features learned by shallow neural networks based on this loss are local averages, opponent colors, and Gabor-like stripe patterns. Furthermore, we can infer connectivity between locations by inferring the switch variables. Contours inferred from this connectivity perform quite well on the Berkeley segmentation database (BSDS500) without any training on contours. Thus, computing predictions across space aids both segmentation and feature learning, and models trained to optimize these predictions show similarities to the human visual system. We speculate that retinotopic visual cortex might implement such predictions over space through lateral connections.

1 Introduction

A long-standing question about human vision is how representations initially be based on parallel processing of retinotopic feature maps can represent *objects* in a useful way. Most research on this topic has focused on computing later object-centered representations from the feature map representations. Psychology and neuroscience have identified features that lead to objects being grouped together [31, 32], have established feature integration into coherent objects as a sequential process [62], and have developed solutions to the binding problem, i.e. ways how neurons could signal whether they represent parts of the same object [12, 46, 56, 61]. In computer vision, researchers have also focused on how feature map representations could be turned into segmentations and object masks. Classically, segmentation algorithm have been clustering algorithms operating on extracted feature spaces [1, 7, 8, 11, 55]. Since the advent of deep neural network models, the focus has shifted towards models that directly map to contour maps or semantic segmentation maps [16, 22, 33, 40, 54, 69].

Diverse findings suggest that processing within the feature maps take object boundaries into account. For example, neurons appear to encode border ownership [28, 46, 52] and to fill in information across surfaces [34] and along illusory contours [18, 64]. Also, attention spreading through the feature maps seems to respect object boundaries [3, 48]. And selecting neurons that correspond to an object takes time, which scales with the distance between the points to be compared [29, 35]. In both human vision and computer vision, relatively little attention has been given to these effects of grouping or segmentation on the feature maps themselves.

Submitted to 36th Conference on Neural Information Processing Systems (NeurIPS 2022). Do not distribute.

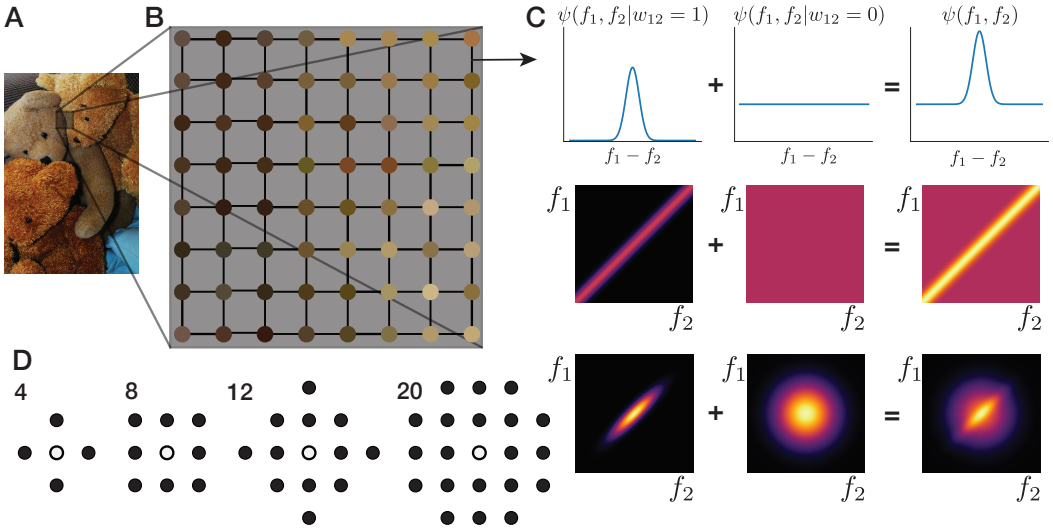

Figure 1: Illustration of the Markov random field model for the feature maps. **A**: An example input image. **B**: Feature map with 4 neighborhood connectivity and pixel color as the extracted feature. **C**: Illustration of the factor that links the feature vectors at two neighboring locations for a 1D feature. Top row: projection of the factor ψ_{ij} onto the difference between the features value $f_i - f_j$, showing the combination of a Gaussian around 0 and a constant function for the connection variable w_{ij} being 1 or 0 respectively. Middle row: 2D representation of the factor and its parts plotted against both feature values. Bottom row: Multiplication of the middle row with the standard normal factor for each position yielding the joint distribution of two isolated positions. **D**: Neighborhoods of different sizes used in the models, scaling from 4 to 20 neighbors for each location.

Additionally, most theories for grouping and segmentation take the features in the original feature maps as given. In human vision, these features are traditionally chosen by the experimenter [31, 62, 61] or are inferred based on other research [46, 52]. Similarly, computer vision algorithms used off-the-shelf feature banks originally [1, 7, 8, 11, 55], and have recently moved towards deep neural network representations trained for other tasks as a source for feature maps [16, 22, 33, 40, 54, 69].

Interestingly, predictability of visual inputs over space and time has been discussed as a solution for both these limitations of earlier theories. Predictability has been used as a cue for segmentation since the law of common fate of Gestalt psychology [31], and both lateral interactions in visual cortices and contour integration respect the statistics of natural scenes [14, 15]. Among other signals like sparsity [44] or reconstruction [30], predictability is also a well known signal for self-supervised learning of features [68], which has been exploited by many recent contrastive learning [e.g. 10, 19, 24, 63] and predictive coding schemes [e.g. 41, 42, 63] for self-supervised learning. However, these uses of predictability for feature learning and for segmentation are usually studied separately.

Here, we propose a model that learns both features and segmentation without supervision. Predictions between locations provide a self-supervised loss to learn the features, how to perform the prediction and how to infer which locations should be grouped. Also, this view combines contrastive learning [19, 63], a Markov random field model for the feature maps [37] and segmentation into a coherent framework. We implement our model using some shallow architectures. The learned features resemble early cortical responses and the object boundaries we infer from predictability align well with human object contour reports from the Berkeley segmentation database (BSDS500 [1]). Thus, retinotopic visual cortex might implement similar computational principles as we propose here.

2 Model

To explain our combined model of feature maps and their local segmentation information, we start with a Gaussian Markov random field model [37] with pairwise factors. We then add a variable $w \in \{0, 1\}$ to each factor that governs whether the factor enters the product or not. This yields a joint distribution for the whole feature map and all w's. Marginalizing out the w's yields a Markov

random field with "robust" factors for the feature map, which we can use predict feature vectors from the vectors at neighboring positions. We find two contrastive losses based on these predictions that can be used to optimize the feature extraction and the factors in the Markov random field model.

We model the distribution of k-dimensional feature maps $\mathbf{f} \in \mathbb{R}^{k,m',n'}$ that are computed from input images $I \in \mathbb{R}^{c,m,n}$ with $c = 3$ color channels (see Fig. 1 A & B). We use a Markov random field model with pairwise factors, i.e. we define the probability of encountering a feature map $\mathbf{f}$ with entries f_i at locations $i \in [1 \dots m'] \times [1 \dots n']$ as follows:

$$p(\mathbf{f}) \propto \prod_i \psi_i(f_i) \prod_{(i,j)\in N} \psi_{ij}(f_i, f_j), \tag{1}$$

where ψ_i is the local factor, N is the set of all neighboring pairs, and ψ_{ij} is the pairwise factor between positions i and j[1]. We will additionally assume shift invariance, i.e. each point has the same set of nearby relative positions in the map as neighbors, ψ_i is the same factor for each position, and each factor ψ_{ij} depends only on the relative position of i and j.

We now add a binary variable $w \in \{0, 1\}$ to each pairwise factor that encodes whether the factor is 'active' ($w = 1$) for that particular image (Fig. 1 C). To scale the probability of $w = 1$ and $w = 0$ relative to each other, we add a factor that scales them with constants $p_{ij} \in [0, 1]$ and $1 - p_{ij}$ respectively:

$$p(\mathbf{f}, \mathbf{w}) \propto \prod_i \psi_i(f_i) \prod_{(i,j)\in N} p_{ij}^{w_{ij}} (1 - p_{ij})^{1-w_{ij}} \psi_{ij}(f_i, f_j)^{w_{ij}} \tag{2}$$

Finally, we assume that the factors are Gaussian and the feature vectors are originally normalized to have mean 0 and variance 1:

$$p(\mathbf{f}, \mathbf{w}) = \frac{1}{Z_0} \mathcal{N}(\mathbf{f}, 0, \mathbf{I}) \prod_{(i,j)\in N} \frac{p_{ij}^{w_{ij}} (1 - p_{ij})^{1-w_{ij}}}{Z(w_{ij}, C_{ij})} \exp\left(-\frac{w_{ij}}{2}(f_i - f_j)^T C_{ij} (f_i - f_j)\right), \tag{3}$$

where Z_0 is the overall normalization constant, $N(\mathbf{f}, 0, \mathbf{I})$ is the density of a standard normal distribution with $k \times m' \times n'$ dimensions, C_{ij} governs the strength of the coupling in the form of a precision matrix, which we will assume to be diagonal, and $Z(w_{ij}, C_{ij})$ scales the distributions with $w_{ij} = 0$ and $w_{ij} = 1$ relative to each other.

We set $Z(w_{ij}, C_{ij})$ to the normalization constant of the Gaussian with standard Gaussian factors for f_i and f_j respectively. For $w = 0$ this is just $(2\pi)^{-k}$, the normalization constant of a standard Gaussian in $2k$ dimensions. For $w = 1$ we get:

$$\begin{aligned} Z(w_{ij} = 1, C_{ij}) &= \int\int \exp\left(-\frac{1}{2} f_i^T f_i - \frac{1}{2} f_j^T f_j - \frac{1}{2}(f_i - f_j)^T C_{ij} (f_i - f_j)\right) df_i df_j && (4) \\ &= (2\pi)^{-k} \det \begin{vmatrix} I + C_{ij} & C_{ij} \\ C_{ij} & I + C_{ij} \end{vmatrix}^{\frac{1}{2}} && (5) \\ &= (2\pi)^{-k} \prod_l \sqrt{1 + 2c_{ll}} && (6) \end{aligned}$$

which we get by computing the normalization constant of a Gaussian with the given precision and then using the assumption that C_{ij} is a diagonal matrix with diagonal entries c_{ll}.

This normalization depends only on w and the coupling matrix C of the factor ψ_{ij} and thus induces a valid probability distribution on the feature maps. Two points are notable about this normalization though: First, once other factors also constrain f_i and/or f_j, this normalization will not guarantee $p(w_{ij} = 1) = p_{ij}$.[2] Second, the w_{ij} are not independent in the resulting distribution. For example, if

[1] i and j thus have two entries each

[2] Instead, $p(w_{ij} = 1)$ will be higher, because other factors increase the precision for the feature vectors, which makes the normalization constants more similar.

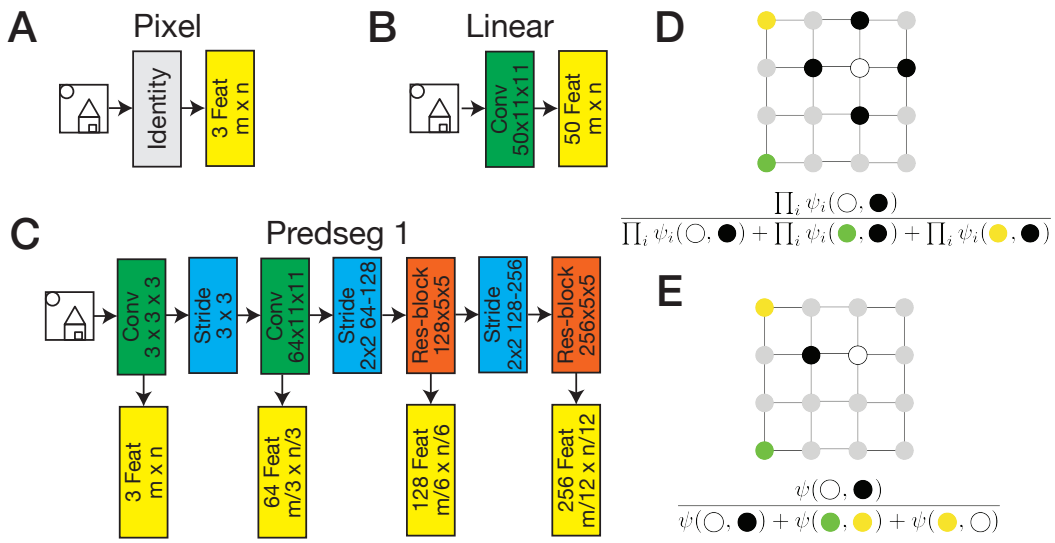

Figure 2: Illustration of the models and learning objectives. **A-C**: Neural network architectures. **D**: Contrasting against random positions. **E**: Contrasting against random factor values.

pairwise factors connect a to b, b to c and a to c the corresponding w are dependent, because $w_{ab} = 1$ and $w_{bc} = 1$ already imply a smaller difference between f_a and f_c than if these factor were inactive, which increases the probability for $w_{ac} = 1$.

2.1 Learning

To learn our model from data, we use a contrastive learning objective on the marginal likelihood $p(\mathbf{f})$. To do so, we first need to marginalize out the w's, which is fortunately simple, because each w affects only a single factor:

$$p(\mathbf{f}) = \sum_{\mathbf{w}} p(\mathbf{f}, \mathbf{w}) = \frac{1}{Z_0} \mathcal{N}(\mathbf{f}, 0, \mathbf{I}) \prod_{(i,j) \in N} [p_{ij} \psi_{ij}(f_i, f_j) + (1 - p_{ij})] \tag{7}$$

Using this marginal likelihood directly for fitting is infeasible though, because computing Z_0, i.e. normalizing this distribution is not computationally tractable.

We resort to contrastive learning to fit the unnormalized probability distribution [19], i.e. we optimize discrimination from a noise distribution with the same support as the target distribution. Following [63] we do not optimize the Markov random field directly, but optimize predictions based on the model using features from other locations as the noise distribution. For this noise distribution, the factors that depend only on a single location (the first product in (1)) will cancel. We thus ignore the $N(\mathbf{f}, 0, \mathbf{I})$ in our optimization and instead normalize the feature maps to mean 0 and unit variance across each image. We define two alternative losses that make predictions for positions based on all their neighbors or for a single factor respectively.

2.1.1 Position loss

The *position loss* optimizes the probability of the feature vector at each location relative to the probability of randomly chosen other feature vectors from different locations and images (Fig. 2 D):

$$l_{\text{pos}}(\mathbf{f}) = \sum_i \log \frac{p(f_i | f_j \forall j \in N(i))}{\sum_{i'} p(f_{i'} | f_j \forall j \in N(i))} \tag{8}$$

$$= \sum_i \sum_{j \in N(i)} \log \psi_{ij}(f_i, f_j) - \sum_i \log \left(\sum_{i'} \exp \left[\sum_{j \in N(i)} \log \psi_{ij}(f_{i'}, f_j) \right] \right), \tag{9}$$

where $N(i)$ is the set of neighbors of i.

This loss is consistent with the prediction made by the whole Markov random field, but is relatively inefficient, because the predicted distribution $p(f_i|f_j \forall j \in N(i))$ is different for every location i. Thus, the second term in equation (9) cannot be reused across the locations i.

To enable a large enough set of points i' to contrast against, we accumulate the gradient from this loss over repeated draws of random points, i.e. we compute this loss multiple times and propagate the gradient of the loss back to the values of the feature maps. At that level, we sum the gradient over multiple repetitions and then propagate the sum of these gradients back through the network. This trick saves memory and effectively allows us to use many more points in the normalization set, because we can free the values and gradients for the different random sets of points after each repetition. This procedure does not save computation time, as we still need to calculate the evaluation for each position and each sample in the normalization set.

2.1.2 Factor loss

The *factor loss* instead maximizes each individual factor for the correct feature vectors relative to random pairs of feature vectors sampled from different locations and images (Fig. 2 E):

$$l_{\text{fact}} = \sum_{i,j} \log \frac{\psi_{ij}(f_i, f_j)}{\sum_{i',j'} \psi_{ij}(f_{i'}, f_{j'})} \tag{10}$$

$$= \sum_{i,j} \log \psi_{ij}(f_i, f_j) - \sum_{i,j} \log \sum_{i',j'} \psi_{ij}(f_{i'}, f_{j'}), \tag{11}$$

where i, j index the correct locations and i', j' index randomly drawn locations, in our implementation generated by shuffling the feature maps and taking all pairs that occur in these shuffled maps.

This loss does not lead to a consistent estimation of the MRF model, because the prediction $p(f_i|f_j)$ should not be based only on the factor ψ_{ij}, but should include indirect effects as f_j also constrains the other neighbors of i. Optimizing each factor separately will thus overaccount for information that could be implemented in two factors. However, this loss has the distinct advantage that the same noise evaluations can be used for all positions and images in a minibatch, which enables a much larger number of noise samples and thus much faster convergence.

2.1.3 Optimization

We optimize all weights of the neural network used for feature extraction and the parameters of the random field, i.e. the connectivity matrices C and the p_{ij} for the different relative spatial locations simultaneously. As an optimization algorithm we use stochastic gradient descent with momentum. Further details of the optimization can be found in the supplementary materials.

2.2 Segmentation inference

Computing the probability for any individual pair of locations (i, j) to be connected, i.e. computing $p(w_{ij} = 1|\mathbf{f})$, depends only on the two connected feature vectors f_i and f_j:

$$\frac{p(w_{ij} = 1|\mathbf{f})}{p(w_{ij} = 0|\mathbf{f})} = \frac{p_{ij}}{(1 - p_{ij})} \frac{Z(w_{ij} = 0, C_{ij})}{Z(w_{ij} = 1, C_{ij})} \exp\left(-(f_i - f_j)^T C_{ij} (f_i - f_j)\right) \tag{12}$$

This inference effectively yields a connectivity measure for each pair of neighboring locations, i.e. a sparse connectivity matrix. Given that we did not apply any prior information enforcing continuous objects or contours, the inferred w_{ij} do not necessarily correspond to a valid segmentation or set of contours. Finding the best fitting contours or segmentation for given probabilities for the ws is an additional process, which in humans appears to be an attention-dependent serial process [29, 52].

To evaluate the detected boundaries in computer vision benchmarks, we nonetheless need to convert the connectivity matrix we extracted into a contour image. To do so, we use the spectral-clustering-based globalization method developed by [1]. This method requires that all connection weights

between nodes are positive. To achieve this, we transform the log-probability ratios for the w_{ij} as follows: For each image, we find the 30% quantile of the values, subtract it from all log-probability ratios, and set all values below 0.01 to 0.01. We then compute the smallest eigenvectors of the graph Laplacian as in graph spectral clustering. These eigenvectors are then transformed back into image space and are filtered with simple edge detectors to find the final contours.

2.3 Model instances

We implement 3 models of increasing complexity in PyTorch (Fig. 2 A-C, [45]):

Pixel value model. For illustrative purposes, we first apply our ideas to the rgb pixel values of an image as features. This provides us with an example, where we can easily show the feature values and connections. Additionally, this model provides an easy benchmark for all evaluations.

Linear model. As the simplest kind of model that allows learning features, we use a single convolutional deep neural network layer as our feature model. Here, we use 50 11×11 linear features.

Predseg1: To show that our methods work for more complex architecture with non-linearities, we use a relatively small deep neural network with 4 layers.

For each of these architectures, we train 24 different networks with all combinations of the following settings: 4 different sizes of neighborhoods (4, 8, 12, or 20 neighbors, see Fig. 1D); 3 different noise levels (0, 0.1, 0.2) and the two learning objectives. As a training set, we used the unlabeled image set from MS COCO [38], which contains 123,404 color images with varying resolution. To enable batch processing, we randomly crop these images to 256×256 pixel resolution, but use no other data augmentation (See supplementary information for further training details).

3 Evaluation

We want to evaluate whether our models learn meaningful features and segmentations. To do so, we first analyze the features in the first layers of our networks where we can judge whether features are representative of biological visual systems. In particular, we extract segmentations from our activations and evaluate those on the Berkeley Segmentation Dataset [1, BSDS500]

3.1 Learned features

Linear Model We first analyze the weights in our linear models (Fig 3 A-C). All instances learn Gabor-like striped features and local averages. These features clearly resemble receptive fields of neurons in primary visual cortex. In particular there appears to be some preference for features that weight the red and green color channels much stronger than the blue channel, similar to the human luminance channel. There is some difference between the two learning objectives though. The position based loss generally leads to lower frequency and somewhat noisier features. This could either be due to the higher learning efficiency of the factor based loss, i.e. the factor based loss is closer to convergence, or due to a genuinely different optimization goal.

Predseg1 In Predseg1, we first analyze the layer 0 convolution (Fig. 3D), which has only 3 channels with 3×3 receptive fields, which we originally introduced as a learnable downsampling. This layer consistently converges to applying near constant weights over space. Additionally, exactly one of the channels has a non-zero mean (the 3rd, 1st and 3rd in Fig. 3D) and the other two take balanced differences between two of the channels (red vs green and green vs. blue in the examples). This parallels the luminance and opponent color channels of human visual perception.

In the second convolution, we observe a similar pattern of oriented filters and local averages as in the linear model albeit in false color as the input channels are rotated by the weighting of the layer 0 convolution (Fig. 3 E & F).

3.2 Contour detection

To evaluate whether the connectivity information extracted by our model corresponds to human perceived segmentation, we extract contours from our models and compare them to contours reported by humans for the Berkeley Segmentation database [1, 43]. This database contains human drawn

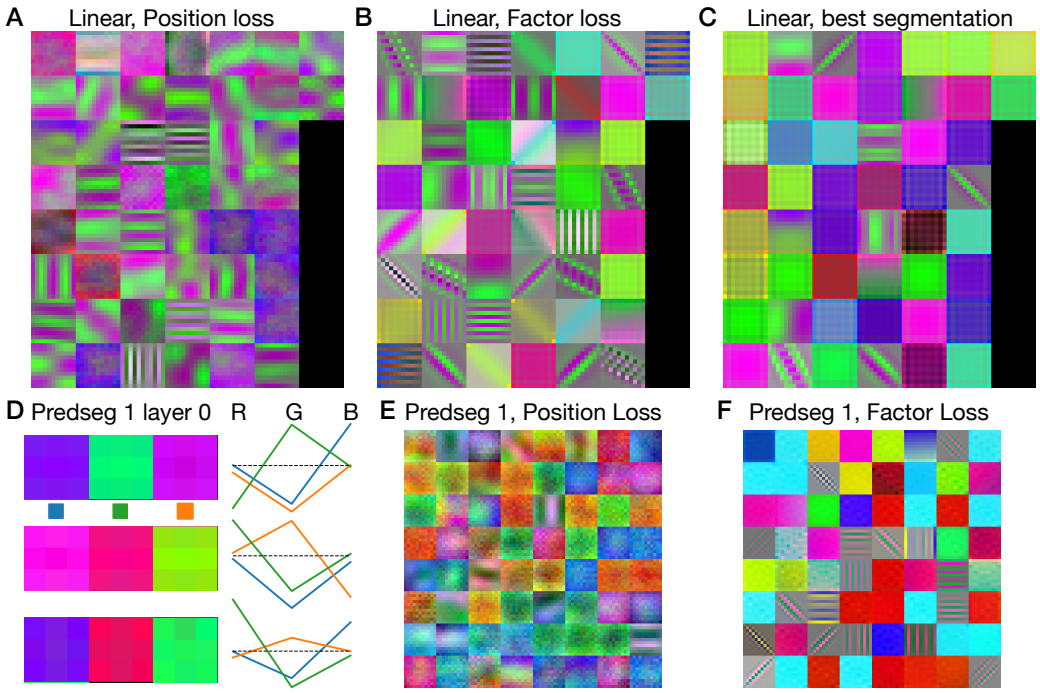

Figure 3: Example linear filter weights learned by our models. Each individual filter is normalized to minimum 0 and maximum 1. As weights can be negative even a zero weight can lead to a pixel having some brightness. For example, a number of channels load similarly on red and green across positions. Where these weights are positive the filter appears yellow and where the weights are negative filter appears blue, even if the blue channel has a zero weight. **A-C**: Feature weights learned by the linear model. **A**: Using the position loss. **B**: Using the factor loss. **C**: The weights of the model that leads to the best segmentation performance, i.e. the one shown in Figure 4. **D**: Weights of the first convolution in predseg1. Next to the filter shapes, which are nearly constant, we plot the average weight of each channel onto the three color channels of the image. **E** Predseg1 filters in the second convolution for a network trained with the position based loss. **F**: Predseg1 filters in the second convolution for a network trained with the factor based loss.

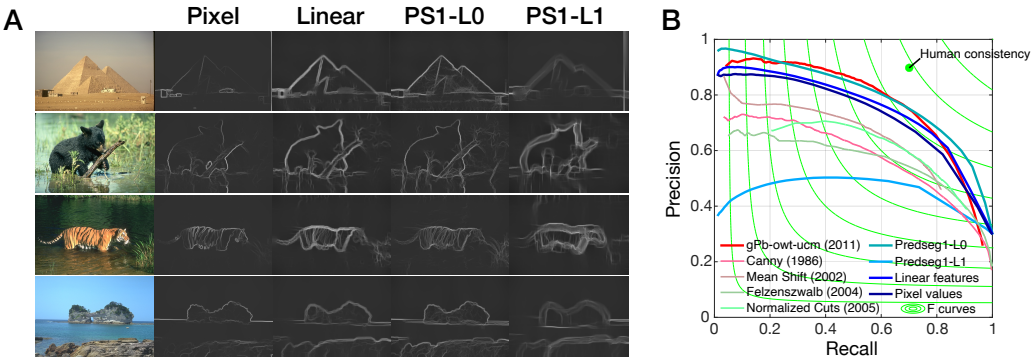

Figure 4: Contour detection results. **A**: Example segmentations from our models. **B**: Precision-recall curves for our models on the Berkeley segmentation dataset, with some other models for comparison as evaluated by [1]: gPb-uwt-ucm, the final algorithm combining all improvements [1], Canny's classical edge detector [5], the mean shift algorithm [7], Felzenschwalbs algorithm [11] and segmentation based on normalized cuts [8]. For all comparison algorithms evaluations on BSDS were extracted from the figure by [1]

Table 1: Numerical evaluation for various algorithms on the BSDS500 dataset. Precision and recall are only given for ODS, i.e. with a the threshold fixed across the whole dataset.

model	**Recall**	**Precision**	**F**(ODS)	**F**(OIS)	**Area_PR**
Deep Contour** [54]	–	–	0.76	0.78	0.80
HED** [69]	–	–	0.79	0.81	0.84
RCF** [40]	–	–	0.81	0.83	–
Deep Boundary** [33]	–	–	0.813	0.831	0.866
BDCN** [22]	–	–	0.83	0.84	0.89
Canny* [5]	–	–	0.60	0.63	0.58
Mean Shift* [7]	–	–	0.64	0.68	0.56
Felzenszwalb* [11]	–	–	0.61	0.64	0.56
Normalized Cuts* [8]	–	–	0.64	0.68	0.45
gPb-owt-ucm [1]	0.73	0.73	0.73	0.76	0.73
Pixel	0.73	0.66	0.69	0.69	0.73
linear	0.78	0.66	0.72	0.73	0.75
Predseg1-Layer 0	0.79	0.69	0.74	0.73	0.80
Predseg1-Layer 1	0.74	0.47	0.57	0.59	0.45

*: Evaluation of these algorithms taken from [1]. **: Supervised DNNs, evaluation taken from [22].

object boundaries for 500 natural images and is accompanied by methods for evaluating segmentation models. Using the methods provided with the database, we compute precision-recall curves for each model and use the best F-value (geometric mean of precision and recall) as the final evaluation metric.

As we had multiple models to choose from, we choose the models from each class that perform best on the *training data* for our reports. For all models this was one of the models with the largest neighborhood, i.e. using 20 neighbors, and the factor loss.

Qualitatively, we observe that all our models yield sensible contour maps (see Fig. 4 A). Even the contours extracted from the pixel model yield sensible contours. Additionally, we note that the linear model and Layer 1 of the predseg model tend to produce double contours, i.e. they tend to produce two contours on either side of the contour reported by human subjects with some area between them connected to neither side of the contour.

Quantitatively, our models also perform well except for the deeper layers of Predseg 1 (Fig. 4B and Table 1). The other models beat most hand-crafted contour detection algorithms that were tested on this benchmark [5, 7, 8, 11] and perform close to the gPb-owt-ucm contour detection and segmentation algorithm [1] that was the state of the art at the time. Layer-0 of Predseg 1 performs best followed by the linear feature model and finally the pixel value model. Interestingly, the best performing models seem to be mostly the local averaging models (cf. Fig. 3 C). In particular, the high performance of the first layer of Predseg 1 is surprising, because it uses only 3×3 pixel local color averages as features.

Since the advent of deep neural network models, networks trained to optimize performance on image segmentation have reached much higher performance on the BSDS500 benchmark, essentially reaching perfect performance up to human inconsistency [e.g. 22, 33, 39, 40, 54, 60, 69, see Table 1]. However, these models all require direct training on human reported contours and often use features learned for other tasks.

4 Discussion

We present a model that can learn features and local segmentation information from images without further supervision signals. This model integrates the prediction task used for feature learning and the segmentation task into the same coherent probabilistic framework. This framework and the dual use for the connectivity information make it seem sensible to represent this information. Furthermore, the features learned by our models resemble receptive fields in the retina and primary visual cortex and the contours we extract from connectivity information match contours drawn by human subject fairly well, both without any training towards making them more human-like.

To improve biological plausibility, all computations in our model are local and all units are connected to the same small, local set of other units throughout learning and inference, which matches early visual cortex, in which the lateral connections that follow natural image statistics are implemented anatomically [4, 26, 48, 59]. This in contrast to other ideas that require flexible pointers to arbitrary locations and features [as discussed by 53] or capsules that flexibly encode different parts of the input [9, 36, 50, 51]. Nonetheless, we employ contrastive learning objectives and backpropagation here, for which we do not provide a biologically plausible implementations. However, there is currently active research towards biologically plausible alternatives to these algorithms [e.g. 27, 70].

Selecting the neurons that react to a specific object appears to rely on some central resource [62, 61] and to spread gradually through the feature maps [28, 29, 52]. We used a computer vision algorithm for this step, which centrally computes the eigenvectors of the connectivity graph Laplacian [1], which does not immediately look biologically plausible. However, a recent theory for hippocampal place and grid cells suggests that these cells compute the same eigenvectors of a graph Laplacian of a prediction network, albeit of a successor representation, i.e. of predictions of the animals state transitions [57, 58]. Thus, this might be an abstract description of an operation brains are capable of. In particular, earlier accounts that model the selection as a marker that spreads to related locations [e.g. 12, 56] have some similarities with iterative algorithms to compute eigenvectors. Originally, phase coherence between the neurons encoding the same object was proposed [12, 46, 56], but a gain increase with object based attention [47] or a known random modulation is also sufficient to select a task relevant set of neurons [20, 21]. Regardless of the mechanistic implementation of the marker, connectivity information of the type our model extracts would be extremely helpful to explain the gradual spread of object selection [12, 46].

Our implementation of the model is not fully optimized, as it is meant as a proof of concept. If one wanted to apply our type of model to large scale tasks such as ImageNet [49] or MS Coco [38], one would have to scale up the networks we use substantially and presumably use some of the additions contrastive learning methods have used for better learning [6, 10, 17, 23, 24, 63] including: image augmentations to explicitly train networks to be invariant to some image changes, prediction heads that allow more complex shapes for the predictions between locations, and memory banks or other methods to decrease the reliance on many negative samples. Also, we did not fully optimize the basic training parameters for our networks, like initialization, optimization algorithm, learning rate, or regularization. Presumably, better performance in all benchmarks could be reached by adjusting any or all of these parameters.

The model we propose here is a probabilistic model of the feature maps. One implication of this is that we could also infer the feature values if they were not fixed based on the input. Thus, our model implies an interesting pattern how neurons should combine their bottom-up inputs with predictions from nearby other neurons, once we include some uncertainty for the bottom-up inputs. In particular, the combination ought to take into account which nearby neurons react to the same object and which ones do not. Investigating this pooling could provide insights and predictions for phenomena that are related to local averaging like crowding for example [2, 13, 25, 65, 66, 67], where summary statistic models currently capture perceptual limitations best [2, 13, 66], but deviations from these predictions suggest that object boundaries change processing [25, 65, 67].

Another promising extension of our model would be processing over time, because predictions over time were found to be a potent signal for contrastive learning [10] and because coherent object motion is among the strongest grouping signals for human observers [32] and computer vision systems [71]. Beside the substantial increases in necessary processing capacity necessary to move to video processing instead of image processing, this step would require some extension of our framework to include object motion into the prediction. Nonetheless, including processing over time seems to be an interesting avenue for future research.

This work aims to move us closer to understanding how human visual perception can take object structure into account in retinotopic feature map processing and may help us to build systems with similar capabilities in the future. We acknowledge that scientific and technological progress can have unknown societal consequences, but we do not foresee any specific negative consequences of this work.

References

[1] P Arbeláez, M Maire, C Fowlkes, and J Malik. Contour Detection and Hierarchical Image Segmentation. *IEEE Transactions on Pattern Analysis and Machine Intelligence*, 33(5):898–916, 2011.

[2] B. Balas, L. Nakano, and R. Rosenholtz. A summary-statistic representation in peripheral vision explains visual crowding. *Journal of Vision*, 9(12):13–13, 2009.

[3] Daniel Baldauf and Robert Desimone. Neural mechanisms of object-based attention. *Science (New York, N.Y.)*, 344(6182):424–427, 2014.

[4] Péter Buzás, Krisztina Kovács, Alex S. Ferecskó, Julian M.L. Budd, Ulf T. Eysel, and Zoltán F. Kisvárday. Model-based analysis of excitatory lateral connections in the visual cortex. *The Journal of Comparative Neurology*, 499(6):861–881, 2006.

[5] John Canny. A Computational Approach to Edge Detection. page 20, 1986.

[6] Ting Chen, Simon Kornblith, Mohammad Norouzi, and Geoffrey Hinton. A Simple Framework for Contrastive Learning of Visual Representations. *arXiv:2002.05709 [cs, stat]*, 2020.

[7] D. Comaniciu and P. Meer. Mean shift: A robust approach toward feature space analysis. *IEEE Transactions on Pattern Analysis and Machine Intelligence*, 24(5):603–619, 2002.

[8] T. Cour, F. Benezit, and Jianbo Shi. Spectral Segmentation with Multiscale Graph Decomposition. In *2005 IEEE Computer Society Conference on Computer Vision and Pattern Recognition (CVPR'05)*, volume 2, pages 1124–1131, San Diego, CA, USA, 2005. IEEE.

[9] Adrien Doerig, Lynn Schmittwilken, Bilge Sayim, Mauro Manassi, and Michael H. Herzog. Capsule networks as recurrent models of grouping and segmentation. *PLOS Computational Biology*, 16(7):e1008017, 2020.

[10] Christoph Feichtenhofer, Haoqi Fan, Bo Xiong, Ross Girshick, and Kaiming He. A large-scale study on unsupervised spatiotemporal representation learning. In *Proceedings of the IEEE/CVF Conference on Computer Vision and Pattern Recognition*, pages 3299–3309, 2021.

[11] Pedro F. Felzenszwalb and Daniel P. Huttenlocher. Efficient Graph-Based Image Segmentation. *International Journal of Computer Vision*, 59(2):167–181, 2004.

[12] Holger Finger and Peter König. Phase synchrony facilitates binding and segmentation of natural images in a coupled neural oscillator network. *Frontiers in Computational Neuroscience*, 7, 2014.

[13] Jeremy Freeman and Eero P Simoncelli. Metamers of the ventral stream. *Nature Neuroscience*, 14(9):1195–1201, 2011.

[14] Wilson S. Geisler and Jeffrey S. Perry. Contour statistics in natural images: Grouping across occlusions. *Visual Neuroscience*, 26(1):109–121, 2009.

[15] W.S. Geisler, J.S. Perry, B.J. Super, and D.P. Gallogly. Edge co-occurrence in natural images predicts contour grouping performance. *Vision Research*, 41(6):711–724, 2001.

[16] Ross Girshick, Jeff Donahue, Trevor Darrell, and Jitendra Malik. Rich feature hierarchies for accurate object detection and semantic segmentation. In *Proceedings of the IEEE conference on computer vision and pattern recognition*, pages 580–587, 2014.

[17] Jean-Bastien Grill, Florian Strub, Florent Altché, Corentin Tallec, Pierre H. Richemond, Elena Buchatskaya, Carl Doersch, Bernardo Avila Pires, Zhaohan Daniel Guo, Mohammad Gheshlaghi Azar, Bilal Piot, Koray Kavukcuoglu, Rémi Munos, and Michal Valko. Bootstrap your own latent: A new approach to self-supervised Learning. *arXiv:2006.07733 [cs, stat]*, 2020.

[18] David H. Grosof, Robert M. Shapley, and Michael J. Hawken. Macaque VI neurons can signal 'illusory' contours. *Nature*, 365(6446):550–552, 1993.

[19] Michael Gutmann and Aapo Hyvarinen. Noise-contrastive estimation: A new estimation principle for unnormalized statistical models. *International Con- ference on Artificial Intelligence and Statistics (AISTATS)*, pages 297–304, 2010.

[20] Caroline Haimerl, Douglas A Ruff, Marlene R Cohen, Cristina Savin, and Eero P Simoncelli. Targeted comodulation supports flexible and accurate decoding in V1. *bioRxiv : the preprint server for biology*, 2021.

[21] Caroline Haimerl, Cristina Savin, and Eero Simoncelli. Flexible information routing in neural populations through stochastic comodulation. *Advances in Neural Information Processing Systems*, 32, 2019.

[22] Jianzhong He, Shiliang Zhang, Ming Yang, Yanhu Shan, and Tiejun Huang. Bi-Directional Cascade Network for Perceptual Edge Detection. In *2019 IEEE/CVF Conference on Computer Vision and Pattern Recognition (CVPR)*, pages 3823–3832, Long Beach, CA, USA, 2019. IEEE.

[23] Kaiming He, Haoqi Fan, Yuxin Wu, Saining Xie, and Ross Girshick. Momentum Contrast for Unsupervised Visual Representation Learning. In *2020 IEEE/CVF Conference on Computer Vision and Pattern Recognition (CVPR)*, pages 9726–9735, Seattle, WA, USA, 2020. IEEE.

[24] Olivier J Hénaff, Aravind Srinivas, Jeffrey De Fauw, Ali Razavi, Carl Doersch, and S M Ali Eslami. Data-Efficient Image Recognition with Contrastive Predictive Coding. *Proceedings of the 37th International Conference on Machine Learning (PMLR)*, page 119, 2020.

[25] Michael H. Herzog, Bilge Sayim, Vitaly Chicherov, and Mauro Manassi. Crowding, grouping, and object recognition: A matter of appearance. *Journal of Vision*, 15(6):5, 2015.

[26] Jonathan J Hunt, William H Bosking, and Geoffrey J Goodhill. Statistical structure of lateral connections in the primary visual cortex. *Neural Systems & Circuits*, 1(1):3, 2011.

[27] Bernd Illing, Jean Ventura, Guillaume Bellec, and Wulfram Gerstner. Local plasticity rules can learn deep representations using self-supervised contrastive predictions. *Advances in Neural Information Processing Systems*, 35:15, 2021.

[28] Danique Jeurissen, Matthew W. Self, and Pieter R. Roelfsema. Surface reconstruction, figure-ground modulation, and border-ownership. *Cognitive neuroscience*, 4(1):50–52, 2013.

[29] Danique Jeurissen, Matthew W. Self, and Pieter R. Roelfsema. Serial grouping of 2D-image regions with object-based attention in humans. *Elife*, 5:e14320, 2016.

[30] Diederik P. Kingma and Max Welling. Auto-Encoding Variational Bayes. *arXiv:1312.6114 [cs, stat]*, 2014.

[31] K Koffka. Principles of gestalt psychology. 1935.

[32] Wolfgang Köhler. Gestalt psychology. *Psychologische Forschung*, 31(1):XVIII–XXX, 1967.

[33] Iasonas Kokkinos. Pushing the Boundaries of Boundary Detection using Deep Learning. *arXiv:1511.07386 [cs]*, 2016.

[34] Hidehiko Komatsu. The neural mechanisms of perceptual filling-in. *Nature Reviews Neuroscience*, 7(3):220–231, 2006.

[35] Ilia Korjoukov, Danique Jeurissen, Niels A. Kloosterman, Josine E. Verhoeven, H. Steven Scholte, and Pieter R. Roelfsema. The Time Course of Perceptual Grouping in Natural Scenes. *Psychological Science*, 23(12):1482–1489, 2012.

[36] Adam R. Kosiorek, Sara Sabour, Yee Whye Teh, and Geoffrey E. Hinton. Stacked Capsule Autoencoders. *arXiv:1906.06818 [cs, stat]*, 2019.

[37] SZ Li. *Markov Random Field Modeling in Computer Vision*. Springer Science & Business Media, 2012.

[38] Tsung-Yi Lin, Michael Maire, Serge Belongie, Lubomir Bourdev, Ross Girshick, James Hays, Pietro Perona, Deva Ramanan, C. Lawrence Zitnick, and Piotr Dollár. Microsoft COCO: Common Objects in Context. *arXiv:1405.0312 [cs]*, 2015.

[39] Drew Linsley, Junkyung Kim, Alekh Ashok, and Thomas Serre. Recurrent neural circuits for contour detection. *arXiv:2010.15314 [cs]*, 2020.

[40] Yun Liu, Ming-Ming Cheng, Xiaowei Hu, Kai Wang, and Xiang Bai. Richer Convolutional Features for Edge Detection. In *Proceedings of the IEEE Conference on Computer Vision and Pattern Recognition*, pages 3000–3009, 2017.

[41] William Lotter, Gabriel Kreiman, and David Cox. Deep Predictive Coding Networks for Video Prediction and Unsupervised Learning. *arXiv:1605.08104 [cs, q-bio]*, 2017.

[42] William Lotter, Gabriel Kreiman, and David Cox. A neural network trained to predict future video frames mimics critical properties of biological neuronal responses and perception. *arXiv:1805.10734 [cs, q-bio]*, 2018.

[43] D. Martin, C. Fowlkes, D. Tal, and J. Malik. A database of human segmented natural images and its application to evaluating segmentation algorithms and measuring ecological statistics. In *Proc. 8th Int'l Conf. Computer Vision*, volume 2, pages 416–423, July 2001.

[44] Bruno A Olshausen and David J Field. Emergence of simple-cell receptive field properties by learning a sparse code for natural images. *Nature*, 381(6583):607–609, 1996.

[45] Adam Paszke, Sam Gross, Francisco Massa, Adam Lerer, James Bradbury, Gregory Chanan, Trevor Killeen, Zeming Lin, Natalia Gimelshein, Luca Antiga, Alban Desmaison, Andreas Kopf, Edward Yang, Zachary DeVito, Martin Raison, Alykhan Tejani, Sasank Chilamkurthy, Benoit Steiner, Lu Fang, Junjie Bai, and Soumith Chintala. Pytorch: An imperative style, high-performance deep learning library. In H. Wallach, H. Larochelle, A. Beygelzimer, F. d'Alché-Buc, E. Fox, and R. Garnett, editors, *Advances in Neural Information Processing Systems 32*, pages 8024–8035. Curran Associates, Inc., 2019.

[46] Alina Peter, Cem Uran, Johanna Klon-Lipok, Rasmus Roese, Sylvia van Stijn, William Barnes, Jarrod R Dowdall, Wolf Singer, Pascal Fries, and Martin Vinck. Surface color and predictability determine contextual modulation of V1 firing and gamma oscillations. *eLife*, 8:e42101, 2019.

[47] Pieter R Roelfsema. Cortical algorithms for perceptual grouping. *Annu. Rev. Neurosci.*, 29:203–227, 2006.

[48] Pieter R Roelfsema, Victor AF Lamme, and Henk Spekreijse. Object-based attention in the primary visual cortex of the macaque monkey. *Nature*, 395(6700):376–381, 1998.

[49] Olga Russakovsky, Jia Deng, Hao Su, Jonathan Krause, Sanjeev Satheesh, Sean Ma, Zhiheng Huang, Andrej Karpathy, Aditya Khosla, Michael Bernstein, Alexander C. Berg, and Li Fei-Fei. ImageNet Large Scale Visual Recognition Challenge. *arXiv:1409.0575 [cs]*, 2015.

[50] Sara Sabour, Nicholas Frosst, and Geoffrey E. Hinton. Dynamic Routing Between Capsules. *arXiv:1710.09829 [cs]*, 2017.

[51] Sara Sabour, Andrea Tagliasacchi, Soroosh Yazdani, Geoffrey E. Hinton, and David J. Fleet. Unsupervised part representation by Flow Capsules. *arXiv:2011.13920 [cs]*, 2021.

[52] Matthew W. Self, Danique Jeurissen, Anne F. van Ham, Bram van Vugt, Jasper Poort, and Pieter R. Roelfsema. The Segmentation of Proto-Objects in the Monkey Primary Visual Cortex. *Current Biology*, 29(6):1019–1029, 2019.

[53] Michael N Shadlen and J Anthony Movshon. Synchrony unbound: A critical evaluation of the temporal binding hypothesis. *Neuron*, 24(1):67–77, 1999.

[54] Wei Shen, Xinggang Wang, Yan Wang, Xiang Bai, and Zhijiang Zhang. DeepContour: A deep convolutional feature learned by positive-sharing loss for contour detection. In *2015 IEEE Conference on Computer Vision and Pattern Recognition (CVPR)*, pages 3982–3991, Boston, MA, USA, 2015. IEEE.

[55] Jianbo Shi and Jitendra Malik. Normalized Cuts and Image Segmentation. *IEEE TRANSACTIONS ON PATTERN ANALYSIS AND MACHINE INTELLIGENCE*, 22(8):18, 2000.

[56] Wolf Singer and Charles M Gray. Visual feature integration and the temporal correlation hypothesis. *Annual review of neuroscience*, 18(1):555–586, 1995.

[57] Kimberly L Stachenfeld, Matthew Botvinick, and Samuel J Gershman. Design Principles of the Hippocampal Cognitive Map. *Advances in Neural Information Processing Systems*, page 9, 2014.

[58] Kimberly L Stachenfeld, Matthew M Botvinick, and Samuel J Gershman. The hippocampus as a predictive map. *Nature Neuroscience*, 20(11):1643–1653, 2017.

[59] Dan D Stettler, Aniruddha Das, Jean Bennett, and Charles D Gilbert. Lateral Connectivity and Contextual Interactions in Macaque Primary Visual Cortex. *Neuron*, 36(4):739–750, 2002.

[60] Zhuo Su, Wenzhe Liu, Zitong Yu, Dewen Hu, Qing Liao, Qi Tian, Matti Pietikäinen, and Li Liu. Pixel Difference Networks for Efficient Edge Detection. In *Proceedings of the IEEE/CVF International Conference on Computer Vision (ICCV)*, pages 5117–5127, 2021.

[61] Anne Treisman. The binding problem. *Current opinion in neurobiology*, 6(2):171–178, 1996.

[62] Anne M. Treisman and Garry Gelade. A Feature-Integration Theory of Attention. *Cognitive Psychology*, 12:97–136, 1980.

[63] Aaron van den Oord, Yazhe Li, and Oriol Vinyals. Representation Learning with Contrastive Predictive Coding. *arXiv:1807.03748 [cs, stat]*, 2019.

[64] R. von der Heydt, E. Peterhans, and G. Baumgartner. Illusory Contours and Cortical Neuron Responses. *Science*, 224(4654):1260–1262, 1984.

[65] Thomas S. A. Wallis, Matthias Bethge, and Felix A. Wichmann. Testing models of peripheral encoding using metamerism in an oddity paradigm. *Journal of Vision*, 16(2):4, 2016.

[66] Thomas S. A. Wallis, Christina M. Funke, Alexander S. Ecker, Leon A. Gatys, Felix A. Wichmann, and Matthias Bethge. A parametric texture model based on deep convolutional features closely matches texture appearance for humans. *Journal of Vision*, 17(12):5–5, 2017.

[67] Thomas SA Wallis, Christina M Funke, Alexander S Ecker, Leon A Gatys, Felix A Wichmann, and Matthias Bethge. Image content is more important than Bouma's Law for scene metamers. *eLife*, 8:e42512, 2019.

[68] Laurenz Wiskott and Terrence J. Sejnowski. Slow Feature Analysis: Unsupervised Learning of Invariances. *Neural Computation*, 14(4):715–770, 2002.

[69] Saining Xie and Zhuowen Tu. Holistically-Nested Edge Detection. In *Proceedings of the IEEE International Conference on Computer Vision*, pages 1395–1403, 2015.

[70] Yuwen Xiong, Mengye Ren, and Raquel Urtasun. LoCo: Local Contrastive Representation Learning. *Advances in Neural Information Processing Systems*, 34:12, 2020.

[71] Charig Yang, Hala Lamdouar, Erika Lu, Andrew Zisserman, and Weidi Xie. Self-supervised Video Object Segmentation by Motion Grouping. *arXiv:2104.07658 [cs]*, 2021.

Checklist

1. For all authors...
   (a) Do the main claims made in the abstract and introduction accurately reflect the paper's contributions and scope? [Yes]
   (b) Did you describe the limitations of your work? [Yes]
   (c) Did you discuss any potential negative societal impacts of your work? [Yes]
   (d) Have you read the ethics review guidelines and ensured that your paper conforms to them? [Yes]
2. If you are including theoretical results...
   (a) Did you state the full set of assumptions of all theoretical results? [N/A]
   (b) Did you include complete proofs of all theoretical results? [N/A]
3. If you ran experiments...
   (a) Did you include the code, data, and instructions needed to reproduce the main experimental results (either in the supplemental material or as a URL)? [Yes] In the supplementary material.
   (b) Did you specify all the training details (e.g., data splits, hyperparameters, how they were chosen)? [Yes] In the supplementary material.
   (c) Did you report error bars (e.g., with respect to the random seed after running experiments multiple times)? [No] This would require undue amounts of computation for results, which we interpret only qualitatively anyway.
   (d) Did you include the total amount of compute and the type of resources used (e.g., type of GPUs, internal cluster, or cloud provider)? [Yes] In the supplementary material.
4. If you are using existing assets (e.g., code, data, models) or curating/releasing new assets...
   (a) If your work uses existing assets, did you cite the creators? [Yes]
   (b) Did you mention the license of the assets? [N/A]
   (c) Did you include any new assets either in the supplemental material or as a URL? [N/A]
   (d) Did you discuss whether and how consent was obtained from people whose data you're using/curating? [N/A]
   (e) Did you discuss whether the data you are using/curating contains personally identifiable information or offensive content? [N/A]
5. If you used crowdsourcing or conducted research with human subjects...
   (a) Did you include the full text of instructions given to participants and screenshots, if applicable? [N/A]
   (b) Did you describe any potential participant risks, with links to Institutional Review Board (IRB) approvals, if applicable? [N/A]
   (c) Did you include the estimated hourly wage paid to participants and the total amount spent on participant compensation? [N/A]