Dual-discriminative Graph Neural Network for Imbalanced Graph-level Anomaly Detection

Ge Zhang[1] **Zhenyu Yang**[1]
Jia Wu[1] **Jian Yang**[1] **Xue Shan**[2] **Hao Peng**[3] **Jianlin Su**[4]
Chuan Zhou[5] **Quan Z. Sheng**[1] **Leman Akoglu**[6] **Charu C. Aggarwal**[7]
[1]Macquarie University [2]University of Wollongong
[3]Beihang University [4]Zhuiyi Technology
[5]Chinese Academy of Sciences [6]Carnegie Mellon University
[7]IBM T. J. Watson Research Center
{ge.zhang5, zhenyu.yang3}@students.mq.edu.au,
{jia.wu, jian.yang}@mq.edu.au, sxue@uow.edu.au,
penghao@buaa.edu.cn, bojonesu@wezhuiyi.com, zhouchuan@amss.ac.cn,
michael.sheng@mq.edu.au, lakoglu@andrew.cmu.edu, charu@us.ibm.com

Abstract

Graph-level anomaly detection aims to distinguish anomalous graphs in a graph dataset from normal graphs. Anomalous graphs represent a very few but essential patterns in the real world. The anomalous property of a graph may be referable to its anomalous attributes of particular nodes and anomalous substructures that refer to a subset of nodes and edges in the graph. In addition, due to the imbalance nature of the anomaly problem, anomalous information will be diluted by normal graphs with overwhelming quantities. Various anomaly notions in the attributes and/or substructures and the imbalance nature together make detecting anomalous graphs a non-trivial task. In this paper, we propose a dual-discriminative graph neural network for graph-level anomaly detection, namely iGAD. Specifically, an anomalous graph attribute-aware graph convolution and an anomalous graph substructure-aware deep Random Walk Kernel (deep RWK) are welded into a graph neural network to achieve the dual-discriminative ability on anomalous attributes and substructures. The deep RWK in iGAD makes up for the deficiency of graph convolution in distinguishing structural information caused by the simple neighborhood aggregation mechanism. Further, we propose a Point Mutual Information (PMI)-based loss function to target the problems caused by imbalance distributions. The loss function enables iGAD to capture the essential correlation between input graphs and their anomalous/normal properties. We evaluate iGAD on four real-world graph datasets. Extensive experiments demonstrate the superiority of iGAD on the graph-level anomaly detection task.

1 Introduction

Graphs have been used as an indispensable tool to describe relational data, such as chemical compounds, transport networks, and social networks. For instance, in a graph that models a chemical compound, nodes represent atoms and edges describe chemical bonds between atoms. Learning graphs to understand the world has been drawing considerable attention in recent years [5, 14, 15, 50]. Given a graph dataset containing a set of graphs, the graph-level anomaly detection task aims to detect graphs with anomalous information. Generally, these anomalous graphs with special characteristics or functions are the minority in a graph dataset. For example, among all antibody molecules, only a few of them exhibit anti-cancer activity on a specific type of cancer cell line [54]. Graph-level

36th Conference on Neural Information Processing Systems (NeurIPS 2022).

anomaly detection is a research topic of great practical value, say, it can support cancer drug discovery by identifying molecules with anti-cancer activity from other antibody molecules [47]. Also, the research can help to reveal pathogenic brain mechanisms by distinguishing the brain structures of patients with neurological disorders from healthy individuals [21].

In practice, the attributes of particular nodes are a contributing factor to a graph's anomalous properties. For example, the hydrogen and oxygen atoms at the end of molecules are the key to discriminating between Alcohol and Alkane [44]. Graph substructures can be another factor for a graph's anomalous properties. For instance, some pharmacophores composed of substructures (e.g., triangle and cycle-based graphlets) can induce molecular toxicity. These graph attributes and substructures that are essential for distinguishing anomalous graphs from normal graphs are regarded as *anomalous attributes* and *anomalous substructures*, respectively. Most existing graph mining methods, especially those graph convolution-based models which have achieved state-of-the-art performance [53, 58, 20, 3], focus on the aggregation of neighborhood-structured information. However, the anomalous structure information could be all possible substructures. In addition, the anomalous attributes and substructures will be diluted by the information of normal graphs with overwhelming quantities, which is the *imbalance nature* of the anomaly problem. In summary, various anomaly notions in attributes and/or substructures and the imbalance nature make graph-level anomaly detection an important yet challenging problem.

In this paper, we propose a dual-discriminative graph neural network for **i**mbalanced **G**raph-level **A**nomaly **D**etection (**iGAD**). Specifically, iGAD investigates a novel anomalous attribute-aware graph convolution. The final node representation composed of the independent encoding on a node itself and the independent encoding on its neighborhoods from different hops. In this way, the attributes of each node in a graph can evolve independently over the graph convolution process and the anomalous attributes on particular nodes can be exposed. However, it is intractable to enable graph convolution to be aware of anomalous substructures. Graph convolution performs message passing depending on multi-hop neighborhoods only and cannot explore all possible substructures in a graph. Even the simple substructures like triangles, graph convolution is unable to count them in a graph [3]. One of the Graph Kernels (GKs), RWK [46], as another way to learn graphs, involves the comparison of any substructures among graphs. RWK learns graphs by exploring common random walk sequences among all input graphs. To embed the information of anomalous substructures into graph representations, we propose to compare random walk sequences of input graphs against anomalous substructures. By modeling anomalous substructures as parameters, they became learnable and can get updated through back-propagation. We entitle this design anomalous substructure-aware deep RWK. In addition, we propose a new loss function to target the imbalance nature of the anomaly problem caused by the great difference in the number of normal and anomalous graphs. The newly proposed loss function models the PMI between graphs and their normal/anomalous properties and enables iGAD to capture anomalous information from an imbalanced graph dataset. Welding three designs mentioned above into a graph neural network, the graph-level anomaly detection model iGAD is achieved. We conclude the contributions of iGAD as follows:

- The anomalous attribute-aware graph convolution exposes anomalous attributes by keeping the independent evolution of each node's attribute.
- Anomalous substructures are modeled as learnable parameters. The proposed anomalous substructure-aware deep RWK embeds the information of anomalous substructures into graph representations by comparing the random walk sequences in the input graphs and the learned anomalous substructures.
- The PMI-based loss function addresses issues brought by the imbalance nature of the anomaly problem and enables iGAD to learn anomalous graphs as a minority effectively.
- Comprehensive experiments demonstrate the effectiveness of iGAD, which outperforms state-of-the-art graph convolution-based graph classification models and graph-level anomaly detection algorithms on four real-world graph datasets. The code is available at https://github.com/graph-level-anomalies/iGAD.

2 Related Work

Anomaly Detection. The task aims to identify anomalies that deviate from the majority of samples. Early anomaly detection algorithms use indicators, such as distance [18] and density [7], to describe

the degree of deviation among samples to detect anomalous ones. For example, isolation forest-based algorithms [25, 26] identify the anomalous by building the binary search tree structure to isolate samples. In addition, anomaly detection algorithms based on one-class classification [39, 38, 36, 62] and autoencoder [2, 63] have also been in the spotlight. For the graph-structured data, most graph anomaly detection algorithms dedicate to detect anomalies (e.g., anomalous nodes [43, 13, 57] and edges [35, 56]) in a single graph [1].

The anomaly notions of graph-level anomalies are more diversified than those of node-level anomalies. For example, node-level anomaly detection methods usually regard nodes that betray network homophily[1] as the anomalies [43]. However, at the graph level, nodes that can achieve an anomalous graph may include but are not limited to the nodes that do not meet homophily. Node-level anomaly detection methods identify anomaly nodes from a micro perspective (e.g., neighborhood structure) while identifying anomalous graphs needs learning the graph dataset at the macro level. Employing node-level anomaly detection methods to detect graph-level anomalies could capture some anomalies, but only a few. Moreover, the graph-level anomaly detection algorithms need to consider anomaly notions related to all possible substructures. Hence, graph anomaly detection methods that identify anomalies in a single graph cannot adapt to the graph-level anomaly detection problem through simple modifications.

Graph-level Anomaly Detection. To the best of our knowledge, only several preliminary research is proposed for the graph-level anomaly detection task. For example, Zhao et al. [61] investigated a research question of "should we use the data for the graph classification task to evaluate graph-level anomaly detection models?", followed by which two graph-level anomaly detection algorithms [27, 34] combined Graph Neural Networks (GNNs) with knowledge distillation and one-class classification to detect anomalous graphs, respectively.

Graph-level anomaly detection can be regarded as a special case of graph classification. There is a huge gap between the number of graphs belonging to the normal class versus the anomalous ones. But, graph classification algorithms usually assume that the number of graphs in each class is balanced. GKs [46, 16, 41, 6, 40] used to be the mainstream graph classification methods. Generally, GKs use the kernel function to calculate kernel values (i.e., similarity) between pair-wised graphs. Afterward, an off-the-shelf classifier is applied to the graph similarity matrix to perform the classification task. Graph classification algorithms based on GKs cannot learn graph representations explicitly and be optimized in an end-to-end fashion. In recent years, graph mining practitioners pay more attention to GNNs [8, 11, 4, 37]. GNNs with spatial graph convolution [20, 45, 19] are summarized as message-passing framework (MPNNs) [17, 53, 58, 55, 51]. In general, MPNNs update the representation of each node by iteratively aggregating information coming from their neighbors. To represent a graph, MPNNs apply the readout function or pooling operation on node embeddings. The spatial graph convolution that mix the representation of nodes and their neighborhoods to represent nodes will smooth node attributes [60, 4]. In addition, [31, 28, 59] proved that spatial graph convolution has limited power in distinguishing graph structures. Performing message passing between subgraphs can enable spatial graph convolution to capture more graph structural information. But such a solution consumes exponentially increases memory and computation complexities [3].

Graph classification methods mentioned above are likely to underfit the anomalous graphs since they do not have any intrinsic mechanism to target the imbalanced distributions. In iGAD, a novel loss is presented for the imbalanced distributions by modeling PMI. In addition, different from existing graph-level anomaly methods [61, 27, 34] that employ the off-the-shelf MPNNs (e.g., GIN [53]) to represent graphs, iGAD can embed the information of anomalous attributes and substructures into graph representations.

Imbalanced Learning. Learning data with imbalanced distribution can be divided into the data- and algorithm-level approaches. The former alleviates the imbalanced distribution of the original data by either under-sampling the majority [48] or over-sampling the minority [9]. However, modifying the original distribution of data will bring a lot of drawbacks inevitably, such as over-fitting and discarding important samples. There are different types of approaches to address the issue at the algorithm-level. The typical approaches include employing post-hoc correction [30], aligning data distribution, [52] and modifying the loss function [24, 22]. In the real-world application, considering the different

[1] In a graph with high homophily, nodes tend to have the same label and similar features as their neighbors. Node-level anomaly detection methods focus on the neighborhood structure and usually identify the nodes which do not have the same label or similar features with most of their neighbors as anomalies.

consequences of false-positive identification (e.g., predicting an inactive chemical compound to be active) and false-negative identification (e.g., predicting a cancer patient as a healthy individual), the situation will be more complicated [33]. In this paper, iGAD introduces PMI to the cross-entropy loss function to solve this problem.

3 Preliminaries

Notations. The graph dataset consisting of N graphs can be denoted as $\mathcal{G} = \{G_1, ..., G_N\}$, where $G_i = \{V_i, E_i\}$ is an unweighted and undirected graph in $\mathcal{G}$, V_i and E_i are the node and the edge set, respectively. The topology of G_i can be modeled as an adjacency matrix $\mathbf{A}_i \in \{0,1\}^{n\times n}$, where $\mathbf{A}_i(u,v) = 1$ if there is an edge between nodes u and v, otherwise 0. $\mathbf{A}_i$ does not consider the self-loop, $\mathbf{A}_i(u,u) = 0, \forall u \in V_i$. We use $\mathbf{x}_u \in \mathbb{R}^c$ to denote the attribute vector of node $u \in V_i$. $\mathbf{X}_i \in \mathbb{R}^{n\times c}$ is the attribute matrix of G_i. $G'_i = \{V'_i, E'_i\}$ can be regarded as a substructure in G_i, *iff* $V'_i \subseteq V_i$ and $E'_i \subseteq E_i$. $\mathcal{Y}$ is the label set of $\mathcal{G}$. G_i is labeled by $y_i \in \{0,1\}$, where 1 represents *anomalous* and 0 represents *normal*.

Problem Definition. This paper concentrates on the supervised graph-level anomaly detection problem. Given the training set $\mathcal{T} = \{(G_1, y_1), (G_2, y_2), ...\}$, we aim to train a model to predict the normal/anomalous proprieties of unseen graphs. $\mathcal{T}$ contains N_1 *anomalous* graphs and N_0 *normal* graphs ($N_1 \ll N_0$). The imbalanced ratio of $\mathcal{T}$ is defined as δ ($\delta = \frac{N_1}{N_0+N_1}$).

Spatial Graph Convolution. It updates each node's representation in a graph by iteratively aggregating the features coming from its one-hop neighborhood. The formulation is:

$$\mathbf{h}^{(k)}(u) = \sigma\left(\mathbf{W}^{(k)} f_{Combine}(\mathbf{h}^{(k-1)}(u), f_{Aggregate}(\{\mathbf{h}^{(k-1)}(v), v \in \mathcal{N}(u)\}))\right), \mathbf{h}^{(0)}(u) = \mathbf{x}_u, \tag{1}$$

where $0 \le k \le K$, $\mathcal{N}(u)$ denotes the 1-hop neighborhood of node u. $f_{Aggregate}$ denotes how to aggregate neighbors of node u, and $f_{combine}$ defines how to combine the immediate representations of node u and its neighborhood. σ is the activation function. Generally, the final representation of the node u is $\mathbf{h}^{(K)}(u)$.

Random Walk Kernels (RWK). RWK measures graph similarities by counting common random walk sequences among graphs. There are two graphs $G_1 = \{V_1, E_1\}$ and $G_2 = \{V_2, E_2\}$. $G_\times = \{V_\times, E_\times\}$ denotes the direct product graph about G_1 and G_2, where $V_\times = \{(u,u')|u \in V_1, u' \in V_2\}$ and $E_\times = \{((u,u'),(v,v'))|(u,v) \in E_1, (u',v') \in E_2\}$. Performing random walking on $G_\times$ acts as doing random walking on G_1 and G_2 simultaneously. The adjacency matrix of direct product graph $\mathbf{A}_\times$ can be obtained by the Kronecker product operation $\otimes$ on $\mathbf{A}_1$ and $\mathbf{A}_2$, that is $\mathbf{A}_\times = \mathbf{A}_1 \otimes \mathbf{A}_2$. The number of l-length common walk sequences between G_1 and G_2 is $\kappa^{(l)}(G_1, G_2) = \mathbf{q}_\times^\top (\mathbf{A}_\times)^l \mathbf{p}_\times$, where $\mathbf{p}_\times$ and $\mathbf{q}_\times$ are the vector about the starting and stopping probabilities of random walks on $G_\times$, respectively. The elements in $\mathbf{p}_\times$ and $\mathbf{q}_\times$ are all ones when there is no prior information. Overall, the RWK about G_1 and G_2 can be defined as:

$$\mathcal{K}(G_1, G_2) := \sum_{l=0}^{\infty} \kappa^{(l)}(G_1, G_2). \tag{2}$$

4 iGAD

In this section, we will describe iGAD in detail (see Figure 1 for an illustration). iGAD contains three key designs: (1) anomalous graph attribute-aware graph convolution; (2) anomalous substructure-aware deep RWK; and (3) PMI-based loss function. The first two designs encode the anomalous information on graph attributes and substructures into graph embeddings. The loss function enables iGAD to get rid of the domination from normal graphs.

4.1 iGAD: Anomalous Attribute-aware Graph Convolution

As aforementioned in Section 1, the attributes of particular nodes can achieve an anomalous graph. The iterative graph convolution operations which update node representations by performing feature transformation on the mixed or concatenated information about nodes and their neighborhoods will

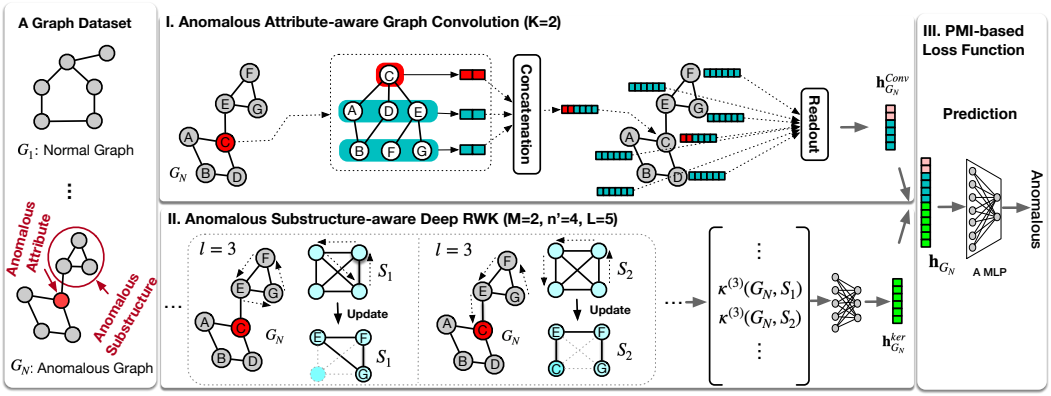

Figure 1: Taking learning the graph G_N in a graph dataset as an example, we illustrate the framework of iGAD with three designs. I. Anomalous Attribute-aware Graph Convolution, which concatenates the independent encoding on nodes and their neighborhoods to represent nodes in G_N. To obtain the graph representation $\mathbf{h}_{G_N}^{Conv}$, a readout function is applied to all node representations. II. The Anomalous Substructure-aware Deep RWK, which performs random walks on two learnable anomalous substructures (i.e., S_1 and S_2) and the input graph G_N simultaneously. Deep RWK obtains $\mathbf{h}_{G_N}^{Ker}$ based on kernel values $\kappa^{(l)}(G_N, S_m), 1 \leq l \leq L, 1 \leq m \leq M$. III. The PMI-based Loss Function. iGAD concatenates $\mathbf{h}_{G_N}^{Conv}$ and $\mathbf{h}_{G_N}^{Ker}$ to obtain the final graph representation $\mathbf{h}_{G_N}$. Finally, a MLP and the PMI-based loss function are applied to $\mathbf{h}_{G_N}$ to predict G_N.

make node representations over-smoothed [60]. Under such a graph convolution mechanism, only a limited anomalous information can be embedded into corresponding node representations. We argue that making each node's attributes evolve independently over the graph convolution process is critical for capturing anomalous attributes. To achieve that, anomalous attribute-aware graph convolution concatenates the independent encoding on the node itself and its k-hop neighborhood $(1 \leq k \leq K)$ to represent each node in a graph. Formally,

$$\mathbf{h}_u = f_{Combine}\left(\mathbf{h}^{(0)}(u), \mathbf{h}^{(1)}(u), ..., \mathbf{h}^{(K)}(u)\right), \tag{3}$$

where $\mathbf{h}_u$ is the final node representation of $u \in V_i$, $\mathbf{h}^{(k)}(u)$ is the representation of node u's k-hop neighborhood, and $f_{Combine}$ is the concatenation operation. $\mathbf{h}^{(0)}(u)$ and $\mathbf{h}^{(k)}(u)$ are formulated as:

$$\mathbf{h}^{(0)}(u) = \text{MLP}(\mathbf{x}_u), \tag{4}$$

and

$$\mathbf{h}^{(k)}(u) = \sigma(\mathbf{A}_i \mathbf{H}_i^{(k-1)} \mathbf{W}^{(k)})_u, \tag{5}$$

respectively, where $\mathbf{H}_i^{(0)} = \mathbf{X}_i$, MLP denotes a multi-layer perceptron, σ represents the activation function, and $\mathbf{W}^{(k)}$ is the trainable weight matrix. To obtain the entire graph representation $\mathbf{h}_{G_i}^{Conv}$, we apply the permutation invariant Readout function $\mathcal{R}(\cdot)$ on all nodes in the graph G_i. That is,

$$\mathbf{h}_{G_i}^{Conv} = \mathcal{R}\left(\{\mathbf{h}_u | u \in V_i\}\right), \tag{6}$$

where $\mathcal{R}(\cdot)$ can be the sum or mean operation.

4.2 iGAD: Anomalous Substructure-aware Deep RWK

The neighborhood aggregation mechanism in graph convolution only utilizes the neighborhood structure as the clue for message passing, and cannot explore all possible substructures in a graph [59, 10]. To make iGAD to be aware of anomalous substructures, we turn to the RWK which can explore all possible substructures by performing random walks in a graph. There is a pioneering work [32] that represents graphs by the RWK values about input graphs and some substructures. It inspires us to encode information of anomalous substructures into graph representations by performing random walks in input graphs and learnable anomalous substructures simultaneously.

We present an anomalous substructure-aware deep RWK, which models each element in the adjacency matrices of anomalous substructures as a learnable parameter. Supposed that $\{S_1, ..., S_M\}$ is the

set of M anomalous substructures, and the size of S_m is n'. $\mathbf{P}_m \in \mathbb{R}^{n' \times n'}$ is the adjacency matrix of S_m, where $\mathbf{P}_m(u', v')$ denotes the possibility that an edge exists between nodes u' and v' in S_m. Due to the symmetry of the adjacency matrix, $\mathbf{P}_m$ contains $\frac{n'(n'-1)}{2}$ parameters. Referring to Eq. 2 and supposing that the starting and the stopping possibilities on each node are all ones, the number of l-length common random walk sequences between the input graph G_i and the anomalous substructure S_m is:

$$\kappa^{(l)}(G_i, S_m) = \mathbf{1}^{\mathsf{T}}(\mathbf{A}_i \otimes \mathbf{P}_m)^l \mathbf{1} = \sum_i \sum_j \left[(\mathbf{P}_m)^l \mathbf{E}(\mathbf{A}_i)^l\right]_{i,j}, \tag{7}$$

where $\mathbf{1} \in \mathbb{R}^{n'n}$ is a column vector full of 1, and $\mathbf{E} \in \mathbb{R}^{n' \times n}$ is a matrix full of 1. The proof of Eq. 7 can be found in Appendix A.1. Random walk kernels with infinite random walk lengths will often meet the halting issue [42]. Therefore, iGAD only considers the random walk length from 1 to L. As the size of anomalous substructures (n') is small, optimizing $(\mathbf{P}_m)^l$ is not necessary. $\mathbf{A}_i$ is a sparse matrix, and we compute $(\mathbf{A}_i)^l$ by the sparse matrix multiplication in PyTorch. That is $(\mathbf{A}_i^s)^l = \mathbf{A}_i^s(\mathbf{A}_i^s ... (\mathbf{A}_i^s(\mathbf{A}_i))...)$, where $\mathbf{A}_i^s$ is the sparse version of $\mathbf{A}_i$. Afterward, all deep RWK values about G_i and S_m, $m \in \{1, .., M\}$ will be assembled into a vector $\mathbf{a}_{G_i}$. That is,

$$\mathbf{a}_{G_i} = \left(\kappa^{(1)}(G_i, S_1), ..., \kappa^{(1)}(G_i, S_M); ...; \kappa^{(L)}(G_i, S_1), ..., \kappa^{(L)}(G_i, S_M)\right), \tag{8}$$

where $\mathbf{a}_{G_i} \in \mathbb{R}^{ML}$. The graph representation $\mathbf{h}_{G_i}^{ker}$ based on deep RWK is:

$$\mathbf{h}_{G_i}^{ker} = \text{MLP}(\mathbf{a}_{G_i}). \tag{9}$$

The final graph representation $\mathbf{h}_{G_i}$ for $G_i \in \mathcal{G}$ can be obtained by concatenating $\mathbf{h}_{G_i}^{Conv}$ and $\mathbf{h}_{G_i}^{Ker}$ together. Based on $\mathbf{h}_{G_i}$, the anomalous attribute-aware graph convolution and anomalous substructure-aware deep RWK are welded into a graph neural network.

4.3 iGAD: PMI-based Loss Function

The number of normal graphs is much more than that of anomalous graphs. Under the imbalance nature of the anomaly problem, normal graphs will dominate the machine learning model. Targeting this issue, we propose a new loss function that can model the PMI between input graphs and their anomalous/normal properties. Specifically, we use $f(\mathcal{G}; \Theta)$ to denote the proposed model iGAD, where Θ represents model parameters. Modeling the PMI between the input graph G_i and its anomalous/normal properties can be formulated as:

$$f_{y_i}(G_i; \Theta) \sim \log \frac{P_\Theta(G_i, y_i)}{P(G_i)P(y_i)}, \tag{10}$$

where the right part represents the PMI between G_i and y_i, $P(y_i)$ is the proportion of anomalous graphs or normal graphs in the training set $\mathcal{T}$. Compared with most existing loss functions, especially the loss function that models the conditional distribution about y_i given G_i (i.e., $f_{y_i}(G_i; \Theta) \sim P_\Theta(y_i|G_i)$), PMI enables iGAD to give priority to learning the information that reveals the essential correlation between graphs and their labels. Eq. 10 can be reformatted as:

$$\log P_\Theta(y_i|G_i) \sim f_{y_i}(G_i, \Theta) + \log P(y_i). \tag{11}$$

After softmax normalization, the distribution of y_i given G_i is formulated as:

$$P_\Theta(y_i|G_i) = \frac{e^{f_{y_i}(G_i;\Theta) + \log P(y_i)}}{\sum_{y_i} e^{f_{y_i}(G_i;\Theta) + \log P(y_i)}}. \tag{12}$$

Incorporating $P_\Theta(y_i|G_i)$ in to the framework of the cross-entropy loss function, we can obtain the PMI-based loss function $\mathcal{L}$:

$$\mathcal{L} = \frac{1}{N} \sum_{i=1}^{N} -\log P_\Theta(y_i|G_i). \tag{13}$$

Specifically, iGAD predict the graph G_i:

Table 1: Statistical information of datasets. We regard the one-hot encoding of node labels (e.g., carbon (C), nitrogen (N), oxygen (O)) as node attributes.

Dataset	#Graphs (N)	#Anomalous Graphs	δ	Avg. #Nodes (Avg. n)	Avg. #Edges (Avg. $\|E\|$)	# Node Labels (c)	Tumor Description
SW-620	40,532	2,411	5.95%	26.05	28.08	65	Colon
MOLT-4	39,765	2,904	7.90%	26.07	28.13	64	Leukemia
MCF-7	27,770	2,293	8.26%	26.39	28.52	46	Breast
PC-3	27,509	1,568	5.70%	26.35	28.49	45	Prostate

$$y_i^* = \begin{cases} \underset{y_i}{\operatorname{argmax}} f_{y_i}(G_i;\Theta) + \log P(y_i), & \text{training stage} \\ \underset{y_i}{\operatorname{argmax}} f^*_{y_i}(G_i;\Theta). & \text{testing stage} \end{cases} \tag{14}$$

The reason that we use $\operatorname{argmax}_{y_i} f^*_{y_i}(G_i;\Theta)$ to predict a graph in the testing stage can be found in Appendix A.2.

There are other loss functions targeting the difficulties brought by the imbalanced distributions, such as the cost-sensitive loss function that assigns or learns different weights to the majority and the minority samples [29, 49, 12]. Compared with them, the PMI-based loss function does not introduce any new parameters that need to be carefully tuned. It comes in the form of the most widely used cross-entropy loss function and gives prediction results that can realize the maximized PMI between inputs and prediction results.

4.4 Algorithm Description & Computational Complexity

The pseudocode of iGAD is included in Algorithm 1 in Appendix A.1. We divide graphs into different mini-batches to train iGAD [23]. But for illustrating how iGAD predicts a graph more clearly, the batch size is set as 1 in Algorithm 1. Given the training set, we initialize anomalous substructures and other parameters (Line 1 in Algorithm 1) and calculate the proportion of normal and anomalous graphs (Line 2). For each graph, iGAD learns its graph representation (Lines 3 to 15). Based on the graph representation, a MLP equipped with the PMI-based loss function predicts the graph (Lines 16 and 17). At the back-propagation stage, anomalous substructures and other parameters will get updated. At the next epoch, deep RWK performs random walking on the input graphs and the updated anomalous substructures simultaneously.

Lemma 1 *The computational complexity of iGAD is $\mathcal{O}(n + |E|)$, where n and $|E|$ are the number of nodes and edges, respectively. (The detailed analysis can be found in Appendix A.3).*

5 Experiments

In this section, we conduct a series of experiments to study the performance of iGAD on the graph-level anomaly detection task. Specifically, we investigate the following six questions:

Q1. How about the performance of iGAD on the graph-level anomaly detection task?
Q2. Does iGAD benefit from the PMI-based loss function?
Q3. How about the performance of the anomalous graph attribute-aware graph convolution in iGAD?
Q4. How about the performance of iGAD when it utilizes pre-defined anomalous substructures?
Q5. Can the anomalous substructure-aware deep RWK in iGAD learn the anomalous substructures?
Q6. How does the maximum length of random walk sequences influence the performance of iGAD?

The questions from Q2 to Q4 can be regarded as the ablation study on our three main design elements, they are (a). cross-entropy loss function versus the proposed PMI-based loss function; (b). general graph convolution versus the proposed graph convolution; (c). RWK versus the proposed deep RWK.

Table 2: Graph-level anomaly detection performance (%) of five graph classification methods, their GAD variants, iGAD, and iGAD's two variants on four datasets. The value behind $\pm$ denotes the standard deviation (stdev) over different data splits. The best result is highlighted in gray. The description about evaluation metrics *AUC*, *Recall*, *Recall(A)*, and *F-score* is in Appendix B.1.

Data	Metrics	GCN	GCN-GAD	GIN	GIN-GAD	DGCNN	DGCNN-GAD	SOPool	SOPool-GAD	RWGNN	RWGNN-GAD	iGAD-1	iGAD-2	iGAD
SW-620	AUC	74.90±0.74	76.48±1.51	78.61±2.85	76.42±2.80	80.06± 0.42	79.36±1.28	75.51± 5.06	76.89±2.07	73.37±0.36	74.92±1.97	85.40±0.93	85.77±0.72	85.82±0.69
	Recall	51.79±0.47	69.65±1.39	56.62±3.97	70.38±2.18	56.02±1.16	72.65±0.63	56.01±2.29	69.97±1.69	51.43±0.87	68.32±1.76	78.60±0.97	79.08±1.31	79.64±0.83
	Recall(A)	3.78±0.95	67.26±1.88	14.40±8.57	64.11±6.83	12.74±2.41	67.84±1.78	13.28±5.05	62.32±6.23	3.11±1.82	63.82±5.40	74.23±3.66	73.24±2.52	74.27±2.99
	F-score	52.00±0.87	52.44±1.32	58.47±5.43	55.00±2.82	58.73±1.64	56.11±0.89	58.11±2.86	55.63±4.78	51.31±1.62	52.47±3.17	61.82±2.22	63.36±1.58	63.68±1.56
MOLT4	AUC	72.55±0.52	72.88±0.99	75.86±1.60	75.43±2.82	76.50± 0.60	77.43±0.73	75.11± 0.97	74.50±1.69	71.30±1.23	71.51±0.70	81.59±1.10	82.73±1.12	83.59±1.07
	Recall	51.26±0.54	66.84±0.66	56.87±6.98	69.40±2.47	55.35±1.27	70.14±0.69	55,31±3.74	69.12±1.50	51.39±1.41	65.84±1.27	74.97±1.61	76.33±1.18	76.82±0.82
	Recall(A)	2.74±1.12	67.32±3.04	17.71±9.02	64.36±7.14	11.69±2.87	65.76±1.97	12.23±9.34	63.44±6.55	3.18±3.21	61.24±3.89	68.18±2.72	70.54±4.28	72.10±2.47
	F-score	50.53±1.03	51.25±1.50	55.43±6.52	55.86±2.01	57.33±1.76	56.22±1.32	56.20±3.64	56.02±3.17	50.67±2.64	52.69±2.60	62.22±0.48	63.12±1.31	63.30±1.17
PC-3	AUC	75.36±2.13	75.62±1.22	78.44±1.67	76.95±1.74	79.15± 1.84	78.90±1.70	69.37± 1.53	78.24±1.97	76.27±0.86	76.10±1.92	85.44±1.20	85.83±1.02	86.04±1.14
	Recall	50.72±0.59	69.46±1.57	57.43±4.61	71.49±1.27	52.88±0.28	72.53±1.40	56.78±3.79	71.44±1.53	51.02±1.53	69.90±1.74	78.31±0.76	79.94±0.64	79.59±0.41
	Recall(A)	1.53±1.26	65.29±5.69	16.31±10.47	68.22±6.76	6.05±0.57	70.06±5.19	15.67±8.98	69.60±9.54	2.17±3.26	66.62±3.03	70.45±3.29	75.35±0.74	75.69±1.64
	F-score	49.99±1.63	52.76±1.11	59.07±4.15	54.09±3.04	54.01±0.48	54.46±1.70	57.80±3.74	51.76±5.27	50.44±2.76	52.72±1.54	61.17±2.43	62.97±1.40	63.50±0.73
MCF-7	AUC	72.70±1.05	73.89±0.99	69.54±1.15	75.90±1.44	76.41± 0.81	76.83±0.48	75.64± 2.17	76.69±1.33	70.47±1.26	73.25±1.56	83.02±0.46	83.49±1.03	83.22±0.64
	Recall	50.42±0.28	67.14±1.13	57.08±3.82	69.40±2.32	55.11±1.11	70.74±0.63	56.82±3.57	68.88±1.07	52.09±1.06	66.99±1.91	75.80±0.81	76.81±0.97	76.77±0.47
	Recall(A)	0.96±0.63	61.79±2.14	16.69±9.92	59.48±10.14	11.07±2.33	69.37±3.05	15.34±8.20	63.92±7.30	4.97±5.24	57.73±11.16	67.67±2.54	71.59±2.19	73.38±3.59
	F-score	48.76±0.59	53.37±1.89	58.27±3.20	58.71±2.53	56.99±1.70	55.74±1.54	56.82±3.57	54.82±3.00	51.65±3.46	56.06±2.93	61.56±1.89	63.75±1.18	64.70±2.58

5.1 Experimental Setup

Datasets. SW-610, MOLT-4, PC-3, and MCF-7 are four real-world graph datasets. These datasets are collected from PubChem[2], which records a tremendous amount of chemical compounds and their anti-cancer activity testing results ("active" or "inactive") on different types of cancer cell lines. We regard the chemical compounds with the outcome "active" as anomalous, and "inactive" as normal. For example, the graph dataset SW-620 is about 40,532 chemical formulas and their anti-cancer activity testing results on the colon cancer cell line. Chemical compounds that exhibit antibody activity against colon cancer are labeled as anomalous graphs, otherwise normal graphs. The statistical information about these four datasets is shown in Table 1.

Baselines & Experimental Settings. To investigate Q1, we compare iGAD with the following baseline models: (1) GCN[20] + Readout function (abbreviated GCN) and GIN [53], these two algorithms employ spatial graph convolution to learn node representation and apply the readout function to node representations to obtain graph representations and classify graphs; (2) DGCNN [58] and SOPool [51]. In these two models, spatial graph convolution and the graph pooling operation are employed to downsize graphs and complete the graph classification task; (3) RWGNN [32] employs random walk sequences to represent graphs and then classify graphs based on graph representations. All the above baselines are supervised and use the cross-entropy loss function; (4) The graph-level anomaly detection methods GLocalKD [27] and OCGTL [34]. The former adopts random distillation to detect the locally- and globally-anomalous graphs and the latter combines the one-class classification and graph transformation learning to identify anomalous graphs. These two algorithms only use labeled normal graphs as supervision information.

Table 3: The performance (%) of two graph-level anomaly detection methods (i.e., GLocalKD and OCGTL) and iGAD *w.r.t.* AUC.

Data	GLocalKD	OCGTL	iGAD
SW-620	64.14±0.92	67.69±0.02	85.82±0.69
MOLT-4	61.43±1.26	57.42±2.38	83.59±1.07
PC-3	64.79±1.22	68.42±1.73	86.04±1.14
MCF-7	61.43±1.26	64.92±1.92	83.22±0.64

For the fairness of experiments and to answer Q2, we also compare iGAD with GCN-GAD, GIN-GAD, DGCNN-GAD, SOPool-GAD, and RWGNN-GAD. These algorithms are the graph anomaly detection (GAD) variants of GCN, GIN, DGCNN, SOPool, and RWGNN. They replace the cross-entropy loss in the original graph classification algorithms with the proposed PMI-based loss function. To answer Q3, we consider a variant of iGAD —iGAD-1 that only utilizes the anomalous graph attribute-aware graph convolution to represent graphs and detect anomalous graphs. To answer Q4, we consider the other variant named iGAD-2 in which the random walking performs on the input graphs and the pre-defined anomalous graph substructures simultaneously. Specifically, 3-star,

[2]https://pubchem.ncbi.nlm.nih.gov

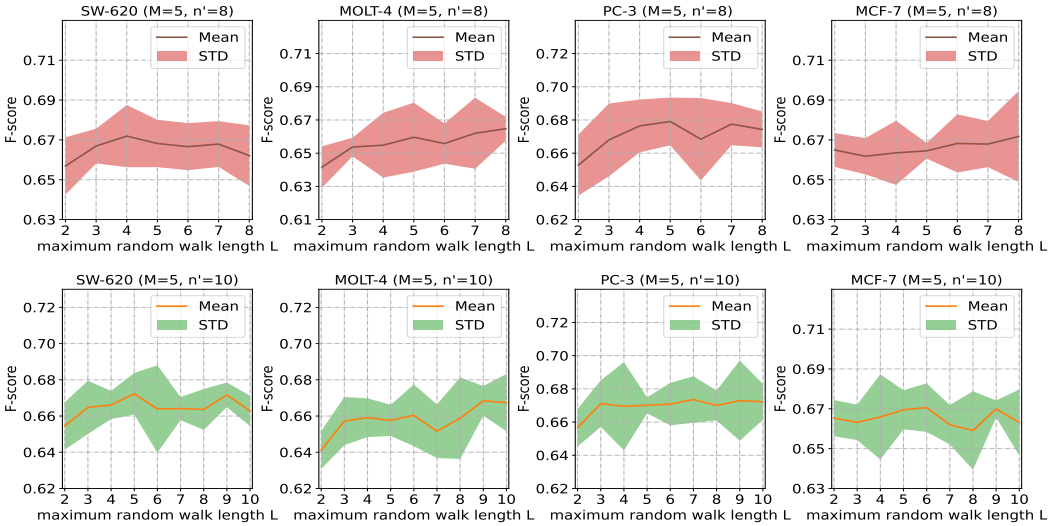

Figure 3: The first row reports the performance of iGAD under the setting M=5 and n'=8. The second row reports the performance of iGAD under the setting M=5 and n'=10.

triangle, tailed triangle, and 4-cycle graphlets are pre-defined graph anomalous substructures (see Figure 4 in Appendix B for these substructures). The parameter setting and the implementation of all the above models can be found in Appendix B.1. We report the experimental results under 5-fold cross-validation.

5.2 Experimental Results

This section answers Q1 - Q6 by A1 - A6, respectively.

A1. iGAD demonstrates effective performance in identifying graph-level anomalies. The performance of iGAD exceeds all graph classification baselines, their corresponding GAD variants, and the state-of-the-art graph-level anomaly detection methods. Observed from Table 2: 1) Compared with GCN, GIN, DGCNN, SOPool, and RWGNN, iGAD achieves superior performance on all datasets in terms of all evaluation metrics; 2) iGAD also beats GCN-GAD, GIN-GAD, DGCNN-GAD, SOPool-GAD, and RWGNN-GAD in terms of all evaluation metrics. In addition, as shown in Table 3, iGAD outperforms two graph-level anomaly detection methods GLocalKD and OCGTL with obvious advantages in terms of AUC.

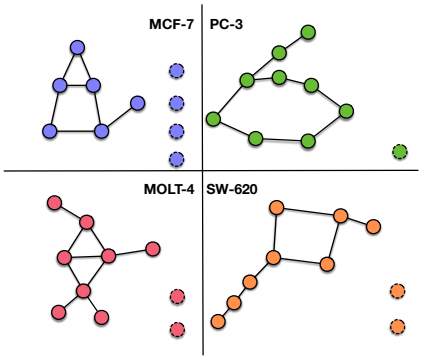

Figure 2: The anomalous substructures learned by iGAD under the setting with M=1, n'=10, L=5. We only draw the edge (u', v') with the learned weight $\mathbf{P}_m(u', v')$ over 0.5.

A2. The PMI-based loss function can capture essential correlations between graphs and their anomalous/normal proprieties even if the data distribution is imbalanced. As shown in Table 2, compared with the baseline models with the cross-entropy loss function (GCN, GIN, DGCNN, SOPOOL, and RWGNN), their GAD variants equipped with the newly proposed PMI-based loss function (GCN-GAD, GIN-GAD, DGCNN-GAD, SOPOOL-GAD, and RWGNN-GAD) witness a significant performance improvement regarding *Recall* and *Recall(A)* on all datasets. For example, on the dataset SW-620, the *Recall* and *Recall(A)* value achieved by DGCNN are $56.02_{\pm 1.16}$ and $12.74_{\pm 2.41}$ respectively. In contrast, $72.65_{\pm 0.63}$ and $67.84_{\pm 1.78}$ are reported by DGCNN-GAD.

A3. The experiment results indicate that the anomalous attribute-aware graph convolution achieves competitive performance in encoding anomalous attributes. As shown in Table 2, iGAD-1 significantly outperforms all baseline algorithms on four graph datasets in terms of *AUC*, *Recall*, and *F-score*. Concerning *Recall(A)*, on the dataset MCF-7, iGAD-1 has a little performance degradation compared

with DGCNN-GAD. Specifically, DGCNN-GAD achieves $69.37_{\pm 3.05}$ on MCF-7, while iGAD-1 gets $67.67_{\pm 2.54}$. But iGAD-1 beats DGCNN-GAD on other datasets in terms of *Recall(A)*.

A4. iGAD is also effective when it is equipped with pre-defined anomalous substructures. As shown in Table 2, iGAD-2 demonstrates obvious advantages against all baseline models. Moreover, iGAD-2 also beats iGAD-1 concerning all metrics on MOLT-4, PC-3, and MCF-7. iGAD-2 does not outperform than iGAD on all datasets concerning *AUC*, *Recall(A)*, and *F-score*. But, on PC-3 and MCF-7, iGAD-2 has a slight lead over iGAD regarding *Recall*. The experiment results demonstrate that, in most cases, the performance of iGAD equipped with a deep RWK is better than iGAD-2 using pre-defined anomalous substructures and algorithms that do not consider anomalous substructures. Based on the above analysis, we can conclude that comparing the random walk sequences between the input graph and pre-defined substructure can improve graph-level anomaly detection to a certain extent, but the algorithm that can automatically learn the anomalous substructures is better.

A5. The anomalous substructures learned by iGAD are demonstrated in Figure 2. We can observe that anomalous graph substructures on four datasets are composed of the triangle, the tailed triangle, and the 4-cycle graphlets. It explains why iGAD-2 can achieve competitive results compared with iGAD (as shown in Table 2 and **A4**). We can draw a preliminary conclusion that the graph substructures having the triangle, the tailed triangle, and the 4-cycle graphlets are important for distinguishing anomalous graphs from normal graphs on these four graph datasets.

A6. The performance of iGAD under different maximum random walk lengths L is shown in Figure 3. Under the setting that iGAD with 5 anomalous substructures and each of substructures has 8 nodes, on these four graph datasets SW-620, MOLT-4, PC-3, and MCF-7, iGAD can achieve the highest *F-score* value when the maximum random walk length ranges from 4 to 8. In addition, when each anomalous substructure contains 10 nodes, iGAD can reach the best *F-score* score at the maximum random walk length from 5 to 9. The results verify that appropriately increasing the maximum length of random walking can improve the performance of iGAD since more much longer random walk sequences can capture more graph structure information.

Overall, the above experiments demonstrate the effectiveness of iGAD in graph-level anomaly detection. We put more parameter analysis experiments in Appendix B.2.

Finally, we discuss the limitations of the proposed graph-level anomaly detection model iGAD. In practice, the nodes and/or substructures at a particular position in a graph can be the reason for the graph's anomalous properties. For example, an Alcohol compound can be obtained by replacing the hydrogen atom at the end of the Alkane compound with a hydroxy group (i.e., -OH). But, iGAD cannot capture the position information of nodes and substructures in graphs. In addition, iGAD is a supervised algorithm. Its performance on identifying the graph-level anomalies that are completely different from the training anomalies may not be superior. Our future work is to explore graph-level anomaly detection algorithms that can identify more extensive anomalous graphs.

6 Conclusion

This paper focused on graph-level anomaly detection which is a research topic of great practical value but less explored. We highlighted the challenges brought by the imbalanced distribution and various anomaly notions in graph attributes and substructures. In addition, the significant differences between detecting anomalous graphs in a graph dataset and identifying anomalous nodes in a single graph were also discussed. The proposed method iGAD regarded graph-level anomaly detection as a special case of graph classification. In iGAD, the anomalous attribute-aware graph convolution and anomalous substructure-aware deep RWK embed graph-level anomaly information into graph representations. A MLP with the PMI-based loss function is employed to distinguish anomalous samples from normal samples based on graph representations. We did extensive experiments on four graph datasets, and iGAD achieved superior performance on the graph-level anomaly detection task.

Acknowledge

We greatly appreciate the insightful and constructive reviews from reviewers. This work is funded by the Australian Research Council Discovery Early Career Researcher Award (ARC DECRA) Project (No. DE200100964).

References

[1] Leman Akoglu, Hanghang Tong, and Danai Koutra. Graph based anomaly detection and description: a survey. *Data Min Knowl Discov*, 29(3):626–688, 2015.

[2] Jinwon An and Sungzoon Cho. Variational autoencoder based anomaly detection using reconstruction probability. *Special Lecture on IE*, 2(1):1–18, 2015.

[3] Muhammet Balcilar, Pierre Héroux, Benoit Gauzere, Pascal Vasseur, Sébastien Adam, and Paul Honeine. Breaking the limits of message passing graph neural networks. In *ICML*, pages 599–608, 2021.

[4] Muhammet Balcilar, Guillaume Renton, Pierre Héroux, Benoit Gaüzère, Sébastien Adam, and Paul Honeine. Analyzing the expressive power of graph neural networks in a spectral perspective. In *ICLR*, 2021.

[5] John Adrian Bondy, Uppaluri Siva Ramachandra Murty, et al. *J. Graph Theory Appl.*, volume 290. Macmillan London, 1976.

[6] Karsten M Borgwardt and Hans-Peter Kriegel. Shortest-path kernels on graphs. In *ICDM*, pages 74–81. IEEE, 2005.

[7] Markus M Breunig, Hans-Peter Kriegel, Raymond T Ng, and Jörg Sander. Lof: identifying density-based local outliers. In *SIGMOD*, pages 93–104, 2000.

[8] Joan Bruna, Wojciech Zaremba, Arthur Szlam, and Yann LeCun. Spectral networks and locally connected networks on graphs. *arXiv preprint arXiv:1312.6203*, 2013.

[9] Jonathon Byrd and Zachary Lipton. What is the effect of importance weighting in deep learning? In *ICML*, pages 872–881, 2019.

[10] Pim de Haan, Taco S Cohen, and Max Welling. Natural graph networks. In *NeurIPS*, pages 3636–3646, 2020.

[11] Michaël Defferrard, Xavier Bresson, and Pierre Vandergheynst. Convolutional neural networks on graphs with fast localized spectral filtering. In *NeurIPS*, pages 3837–3845, 2016.

[12] Jacek P Dmochowski, Paul Sajda, and Lucas C Parra. Maximum likelihood in cost-sensitive learning: Model specification, approximations, and upper bounds. *J. Mach. Learn. Res.*, 11(12), 2010.

[13] Yingtong Dou, Zhiwei Liu, Li Sun, Yutong Deng, Hao Peng, and Philip S Yu. Enhancing graph neural network-based fraud detectors against camouflaged fraudsters. In *CIKM*, pages 315–324, 2020.

[14] David Duvenaud, Dougal Maclaurin, Jorge Aguilera-Iparraguirre, et al. Convolutional networks on graphs for learning molecular fingerprints. In *NeurIPS*, pages 2224–2232, 2015.

[15] Alex Fout, Jonathon Byrd, Basir Shariat, et al. Protein interface prediction using graph convolutional networks. In *NeurIPS*, pages 6530–6539, 2017.

[16] Thomas Gärtner, Peter Flach, and Stefan Wrobel. On graph kernels: Hardness results and efficient alternatives. In *Learning theory and kernel machines*, pages 129–143. Springer, 2003.

[17] Justin Gilmer, Samuel S Schoenholz, Patrick F Riley, Oriol Vinyals, and George E Dahl. Neural message passing for quantum chemistry. In *ICML*, pages 1263–1272, 2017.

[18] Markus Goldstein and Seiichi Uchida. A comparative evaluation of unsupervised anomaly detection algorithms for multivariate data. *PloS one*, 11(4):e0152173, 2016.

[19] Will Hamilton, Zhitao Ying, and Jure Leskovec. Inductive representation learning on large graphs. In *NeurIPS*, pages 1024–1034, 2017.

[20] Thomas N. Kipf and Max Welling. Semi-supervised classification with graph convolutional networks. In *ICLR*, 2017.

[21] Tommaso Lanciano, Francesco Bonchi, and Aristides Gionis. Explainable classification of brain networks via contrast subgraphs. In *KDD*, pages 3308–3318, 2020.

[22] Buyu Li, Yu Liu, and Xiaogang Wang. Gradient harmonized single-stage detector. In *AAAI*, pages 8577–8584, 2019.

[23] Mu Li, Tong Zhang, Yuqiang Chen, and Alexander J Smola. Efficient mini-batch training for stochastic optimization. In *KDD*, pages 661–670, 2014.

[24] Tsung-Yi Lin, Priya Goyal, Ross Girshick, Kaiming He, and Piotr Dollár. Focal loss for dense object detection. In *CVPR*, pages 2980–2988, 2017.

[25] Fei Tony Liu, Kai Ming Ting, and Zhi-Hua Zhou. Isolation forest. In *ICDM*, pages 413–422. IEEE, 2008.

[26] Fei Tony Liu, Kai Ming Ting, and Zhi-Hua Zhou. Isolation-based anomaly detection. *ACM Trans. Knowl. Discov. Data*, 6(1):1–39, 2012.

[27] Rongrong Ma, Guansong Pang, Ling Chen, and Anton van den Hengel. Deep graph-level anomaly detection by glocal knowledge distillation. In *WSDM*, pages 704–714, 2022.

[28] Haggai Maron, Heli Ben-Hamu, Hadar Serviansky, and Yaron Lipman. Provably powerful graph networks. In *NeurIPS*, pages 2153–2164, 2019.

[29] Hamed Masnadi-Shirazi and Nuno Vasconcelos. Risk minimization, probability elicitation, and cost-sensitive svms. In *ICML*, pages 759–766, 2010.

[30] Aditya Krishna Menon, Sadeep Jayasumana, Ankit Singh Rawat, Himanshu Jain, Andreas Veit, and Sanjiv Kumar. Long-tail learning via logit adjustment. In *ICLR*, 2020.

[31] Christopher Morris, Martin Ritzert, Matthias Fey, William L Hamilton, Jan Eric Lenssen, Gaurav Rattan, and Martin Grohe. Weisfeiler and leman go neural: Higher-order graph neural networks. In *AAAI*, pages 4602–4609, 2019.

[32] Giannis Nikolentzos and Michalis Vazirgiannis. Random walk graph neural networks. In *NeurIPS*, pages 16211–16222, 2020.

[33] Shirui Pan, Jia Wu, and Xingquan Zhu. Cogboost: Boosting for fast cost-sensitive graph classification. *IEEE Trans. Knowl. Data Eng.*, 27(11):2933–2946, 2015.

[34] Chen Qiu, Marius Kloft, Stephan Mandt, and Maja Rudolph. Raising the bar in graph-level anomaly detection. In *IJCAI*, pages 2196–2203, 2022.

[35] Stephen Ranshous, Steve Harenberg, Kshitij Sharma, and Nagiza F Samatova. A scalable approach for outlier detection in edge streams using sketch-based approximations. In *SDM*, pages 189–197, 2016.

[36] Lukas Ruff, Robert Vandermeulen, Nico Goernitz, Lucas Deecke, Shoaib Ahmed Siddiqui, Alexander Binder, Emmanuel Müller, and Marius Kloft. Deep one-class classification. In *ICML*, pages 4393–4402, 2018.

[37] Saurabh Sawlani, Lingxiao Zhao, and Leman Akoglu. Fast attributed graph embedding via density of states. In *ICDM*, pages 559–568. IEEE, 2021.

[38] Bernhard Schölkopf, John C Platt, John Shawe-Taylor, Alex J Smola, and Robert C Williamson. Estimating the support of a high-dimensional distribution. *Neural Comput.*, 13(7):1443–1471, 2001.

[39] Bernhard Schölkopf, Robert C Williamson, Alex Smola, John Shawe-Taylor, and John Platt. Support vector method for novelty detection. In *NeurIPS*, pages 582–588, 1999.

[40] Nino Shervashidze and Karsten Borgwardt. Fast subtree kernels on graphs. In *NeurIPS*, pages 1660–1668, 2009.

[41] Nino Shervashidze, SVN Vishwanathan, Tobias Petri, Kurt Mehlhorn, and Karsten Borgwardt. Efficient graphlet kernels for large graph comparison. In *AISTATS*, pages 488–495, 2009.

[42] Mahito Sugiyama and Karsten Borgwardt. Halting in random walk kernels. In *NeurIPS*, pages 1639–1647, 2015.

[43] Jianheng Tang, Jiajin Li, Ziqi Gao, and Jia Li. Rethinking graph neural networks for anomaly detection. In *ICML*, pages 21076–21089, 2022.

[44] Ruo-Chun Tzeng and Shan-Hung Wu. Distributed, egocentric representations of graphs for detecting critical structures. In *ICML*, pages 6354–6362, 2019.

[45] Petar Veličković, Guillem Cucurull, Arantxa Casanova, Adriana Romero, Pietro Lio, and Yoshua Bengio. Graph attention networks. In *ICLR*, 2017.

[46] S Vichy N Vishwanathan, Nicol N Schraudolph, Risi Kondor, and Karsten M Borgwardt. Graph kernels. *J. Mach. Learn. Res.*, 11:1201–1242, 2010.

[47] H Gerhard Vogel, Wolfgang H Vogel, H Gerhard Vogel, Günter Müller, Jürgen Sandow, and Bernward A Schölkens. *Drug discovery and evaluation: pharmacological assays*, volume 2. Springer, 1997.

[48] Byron C Wallace, Kevin Small, Carla E Brodley, and Thomas A Trikalinos. Class imbalance, redux. In *ICDM*, pages 754–763, 2011.

[49] Jiaqi Wang, Wenwei Zhang, Yuhang Zang, Yuhang Cao, Jiangmiao Pang, Tao Gong, Kai Chen, Ziwei Liu, Chen Change Loy, and Dahua Lin. Seesaw loss for long-tailed instance segmentation. In *CVPR*, pages 9695–9704, 2021.

[50] Shen Wang, Lifang He, Bokai Cao, Chun-Ta Lu, Philip S Yu, and Ann B Ragin. Structural deep brain network mining. In *KDD*, pages 475–484, 2017.

[51] Zhengyang Wang and Shuiwang Ji. Second-order pooling for graph neural networks. *IEEE Trans. Pattern Anal. Mach. Intell.*, 2020.

[52] Gang Wu and Edward Y Chang. Kba: Kernel boundary alignment considering imbalanced data distribution. *IEEE Trans. Knowl. Data Eng.*, 17(6):786–795, 2005.

[53] Keyulu Xu, Weihua Hu, Jure Leskovec, and Stefanie Jegelka. How powerful are graph neural networks? In *ICLR*, 2019.

[54] Xifeng Yan, Hong Cheng, Jiawei Han, and Philip S Yu. Mining significant graph patterns by leap search. In *SIGMOD*, pages 433–444, 2008.

[55] Zhitao Ying, Jiaxuan You, Christopher Morris, Xiang Ren, Will Hamilton, and Jure Leskovec. Hierarchical graph representation learning with differentiable pooling. *NeurIPS*, pages 4805–4815, 2018.

[56] Ge Zhang, Zhao Li, Jiaming Huang, Jia Wu, Chuan Zhou, Jian Yang, and Jianliang Gao. efraudcom: An e-commerce fraud detection system via competitive graph neural networks. *ACM Trans Inf Syst*, 40(3):1–29, 2022.

[57] Ge Zhang, Jia Wu, Jian Yang, Amin Beheshti, Shan Xue, Chuan Zhou, and Quan Z Sheng. Fraudre: Fraud detection dual-resistant to graph inconsistency and imbalance. In *ICDM*, pages 867–876. IEEE, 2021.

[58] Muhan Zhang, Zhicheng Cui, Marion Neumann, et al. An end-to-end deep learning architecture for graph classification. In *AAAI*, pages 4438–4445, 2018.

[59] Muhan Zhang and Pan Li. Nested graph neural networks. In *NeurIPS*, pages 15734–15747, 2021.

[60] Lingxiao Zhao and Leman Akoglu. Pairnorm: Tackling oversmoothing in gnns. In *ICLR*, 2020.

[61] Lingxiao Zhao and Leman Akoglu. On using classification datasets to evaluate graph outlier detection: Peculiar observations and new insights. *Big Data*, 2021.

[62] Panpan Zheng, Shuhan Yuan, Xintao Wu, Jun Li, and Aidong Lu. One-class adversarial nets for fraud detection. In *AAAI*, pages 1286–1293, 2019.

[63] Bo Zong, Qi Song, Martin Renqiang Min, Wei Cheng, Cristian Lumezanu, Daeki Cho, and Haifeng Chen. Deep autoencoding gaussian mixture model for unsupervised anomaly detection. In *ICLR*, 2018.

Checklist

1. For all authors...
   (a) Do the main claims made in the abstract and introduction accurately reflect the paper's contributions and scope? [Yes]
   (b) Did you describe the limitations of your work? [Yes] see section 5.
   (c) Did you discuss any potential negative societal impacts of your work? [N/A]
   (d) Have you read the ethics review guidelines and ensured that your paper conforms to them? [Yes]
2. If you are including theoretical results...
   (a) Did you state the full set of assumptions of all theoretical results? [Yes]
   (b) Did you include complete proofs of all theoretical results? [Yes]
3. If you ran experiments...
   (a) Did you include the code, data, and instructions needed to reproduce the main experimental results (either in the supplemental material or as a URL)? [Yes]
   (b) Did you specify all the training details (e.g., data splits, hyperparameters, how they were chosen)? [Yes]
   (c) Did you report error bars (e.g., with respect to the random seed after running experiments multiple times)? [Yes]
   (d) Did you include the total amount of compute and the type of resources used (e.g., type of GPUs, internal cluster, or cloud provider)? [Yes]
4. If you are using existing assets (e.g., code, data, models) or curating/releasing new assets...
   (a) If your work uses existing assets, did you cite the creators? [N/A]
   (b) Did you mention the license of the assets? [N/A]
   (c) Did you include any new assets either in the supplemental material or as a URL? [N/A]
   (d) Did you discuss whether and how consent was obtained from people whose data you're using/curating? [N/A]
   (e) Did you discuss whether the data you are using/curating contains personally identifiable information or offensive content? [N/A]
5. If you used crowdsourcing or conducted research with human subjects...
   (a) Did you include the full text of instructions given to participants and screenshots, if applicable? [N/A]
   (b) Did you describe any potential participant risks, with links to Institutional Review Board (IRB) approvals, if applicable? [N/A]
   (c) Did you include the estimated hourly wage paid to participants and the total amount spent on participant compensation? [N/A]