Emergence of Grounded, Optimally Compositional Spatial Language among Homogeneous Agents

Anonymous authors
Paper under double-blind review

Abstract

A mechanism of effective communication is integral to human existence. An essential aspect of a functional communication scheme among a rational human population involves an efficient, unambiguous, adaptive, and coherent apparatus to convey one's goal to others. Such an effective macro characteristic can emerge in a finite population through incremental learning via trial and error at the individual (micro) level, with nearly consistent individual learning faculty and experience across the population. In this paper, we study minimal yet pertinent aspects of glossogenetics, specifically primal human communication mechanisms, through computational modeling. In particular, we model the process as a language game within the fabric of a decentralized, multi-agent deep reinforcement learning setting, where the agents with local learning and neural cognitive faculties interact through a series of dialogues. Our model seeks to achieve the principle of least effort and overcome the poverty of stimulus among homogeneous agents through mirror networks. In our examinations, we observe the emergence of successful and efficient communication among static and dynamic agent populations through consistent learning.

1 Introduction

Effective communication via signals is the key to success in a cooperative world, where the goal is to complete the desired tasks by efficiently coordinating among themselves. A functional communication language should be unambiguous, efficient, easily acquirable (culturally transmitted) and rooted in the environment. Language Chomsky (2006); Montague et al. (1970); de Saussure (2011) is an autonomous, culturally transmitted, complex adaptive system realised through multiple modalities - either vocal-auditory or manual-visual which translate mental representations which are internal structures to utterances that represent the surface structure. In many scenarios, a combination of these modalities is applied to express the context unambiguously, which is primarily attributed to the complexity of the context and the environment. In cooperative AI and cognitive science, language games Wittgenstein (1954); David (1969); Arrington (1954); Steels (1997; 2003); Wagner et al. (2003) which was motivated by the picture theory of language Wittgenstein (1954) and operant conditioning theory Skinner (1986) are empirical computational models developed to study the origin, evolution, and acquisition of human languages. The game setting involves a bottom-up simulation model which usually consists of multiple artificial agents (neural or non-neural) equipped with sufficient cognitive abilities and sometimes sensory-motor systems interacting in a shared environment through vocal or non-vocal means and subsequently learning from the outcomes of the interactions. The language structures that emerge in these settings are never equivalent to human languages, since human languages are refined through millions of years of cultural evolution. However, language games can provide deep insights into the emergence of various aspects of human language mechanisms, such as syntactic structures Garcia-Casademont & Steels (2016), compositionality, word order, generalization, brevity, stability, statistical regularity, complexity, coherence, and linguistic divergence.

With the recent advancement in the field of deep learning Mnih et al. (2013) with respect to computational tractability, one could observe rigorous applications of deep learning and deep reinforcement learning in the context of language games Lazaridou & Baroni (2020); Dafoe et al. (2020), especially referential/discrimination games Lazaridou et al. (2017); Havrylov & Titov (2017), reconstruction games Kharitonov

et al. (2020), navigation/action games Kajić et al. (2020); Mordatch & Abbeel (2018) and visual communication games Qiu et al. (2022). A few of these focus on the emergence of coherent communication protocols from scratch (tabula rasa) in a multi-deep-agent setup Sukhbaatar et al. (2016); Foerster et al. (2016); Havrylov & Titov (2017); Lazaridou et al. (2017; 2018). A few others target the pertinent linguistic universals of natural languages, such as the symbolic grounding Mordatch & Abbeel (2018); Kottur et al. (2017); Lin et al. (2021), compositionality Mordatch & Abbeel (2018); Kottur et al. (2017); Li & Bowling (2019); Ren et al. (2020); Wang et al. (2016); Andreas (2018), generalization Baroni (2020); Chaabouni et al. (2020), brevity regularity Rita et al. (2020); Kharitonov et al. (2020), the cultural and architectural transmission Dagan et al. (2020); Ren et al. (2020), language structures through ease-of-teaching pressure Li & Bowling (2019) and networked communication Gupta et al. (2020). Some of the recent works also provide deeper analysis pertaining to the nature and factors affecting the semiotic dynamics underlying the emergence of language and language constructs. Kottur et al. (2017); Resnick et al. (2020); Tucker et al. (2022) delve into the factors and constraints such as selectionist criteria, utility, informativeness, memory capacity, and learning capabilities that contribute to the development of compositionality and Graesser et al. (2019); Eccles et al. (2019); Gaya et al. (2016) analyze conditions, inductive biases and intrinsic motivation required for the emergence of a coherent language. Another direction in which language emergence is being evaluated is along the dimension of scale Chaabouni et al. (2022); Rita et al. (2022), where the correlation between language characteristics and system complexity, and population dynamics is examined, while Lazaridou et al. (2020) incorporates pre-trained general language models to develop task-specific language models.

In this paper, we develop a computational language game framework to model the factors influencing language dynamics involving a finite number of homogeneous deep neural agents with sensory-motor abilities who wish to convey their goals to other agents effectively through communication using deep reinforcement learning in a guessing game setting. This is the first attempt of its kind to study language emergence in both guessing games as well as homogeneous multi-agent settings. In this paper, we also introduce efficient communication through the principle of least effort. This also is the first of its kind.

2 Problem Formulation

In this paper, our objective is to enable the emergence of coherent symbolic structures among a population of deep neural agents through decentralized learning and self-organization in language games. Our setting consists of N deep neural agents populated on a graph world $G = (V, E)$ which is embedded on a bounded 2D plane (flat earth) where V is the set of vertices and E is the set of edges. All the nodes are similar in shape. However, they possess two relevant features, location and color which distinguish them from each other. The location is unique for a node, although they can have the same color. At each instant in the game, one agent is paired against another to initiate a semiotic cycle of dialogue consisting of D conversations. In dialogue, one random agent takes the role of speaker, while the other agent is the listener. In a conversation, the speaker agent chooses a target node (the topic of conversation) uniformly at random from the world (unknown to the listener) and it will try to communicate the target node to the other agent by presenting the utterance using an appropriate conceptualization and vocal language on a noise-free, face-to-face, discrete channel where everything said is heard. The objective of the listener is to decipher the meaning of the utterance and identify the target node and thus accept the utterance by providing evidence of understanding. The interaction is subsequently rewarded according to the interpretation outcome which is shared among the participating agents. In case of failed communication, the speaker discloses the target node to the listener. Learning occurs through the induction of hypotheses (the innate linguistic structure that is characterized by neural networks) based on payoffs, and disclosures.

We formulate our setting using a multi-agent Markov game framework Littman (1994); Puterman (2014) since we aim for the emergence of symbolic structures through interactions among agents who possess the cognitive ability to extract and reinforce commonalities across multiple experiences. Here, we assume that the agents only have a partial observation of the environment, which aligns with real human scenarios where one can only be aware of his local surroundings and perceive the world in a coarse form. The state of the environment at time step t is denoted by $s^{(t)} \in \mathcal{S}$, where $\mathcal{S}$ is the set of all the environment states. We let $o_i^{(t)} \in \mathcal{O}$ be the partial observation of agent i, which is characterized by the function $f_i : \mathcal{S} \mapsto \mathcal{O}$, where

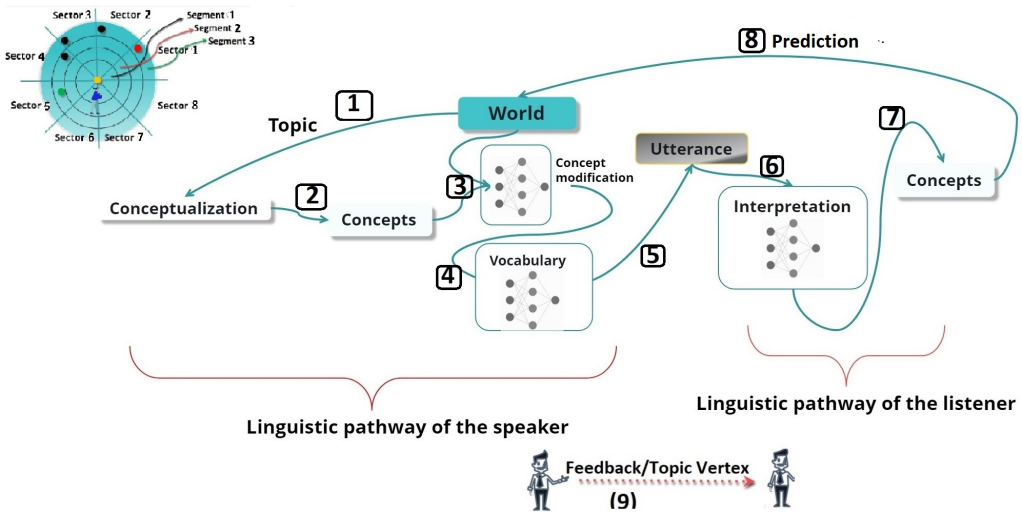

Figure 1: Semiotic pathway illustration of the guessing game

$\mathcal{O}$ is the set of all possible observations. At time instant t, agent i chooses a random action $a_i^{(t)}$ which is dependent on the current observation according to a parameterized stochastic policy $\pi_{\theta_i}(\cdot|o_i^{(t)})$ which is a conditional probability mass function over $\mathcal{A}$ conditioned on the observation $o_i^{(t)}$. For agent i, each state transition yields a random reward $r_i^{(t)}$ according to the function $\mathcal{R}\colon \mathcal{S} \times \mathcal{A} \times \mathcal{S} \mapsto \mathbb{R}$. The system evolution is stochastic in nature and characterized by the probability transition function $\mathcal{P} : \mathcal{S} \times \mathcal{A} \times \mathcal{S} \mapsto [0, 1]$, where $\mathcal{P}(s, a, s') = \mathbb{P}r(s^{(t+1)} = s'|s^{(t)} = s, a^{(t)} = a)$ which is the conditional probability of next state is s' conditioned on the current state and action being s and a respectively. The collective goal of the agent population is to collaboratively seek a policy $\pi_{\theta*} = [\pi_{\theta_1^\star}, \pi_{\theta_2^\star}, \ldots, \pi_{\theta_N^\star}]$ that maximizes the globally averaged long-term return over the network based solely on local information, *i.e.*,

$$\theta_i^\star = \arg\max_{\theta \in \Theta} J_i(\theta), \text{ with } J_i(\theta) = \mathbb{E}_{\boldsymbol{\pi_\theta}, \mu}\left[\sum_{t=0}^{T-1} \mathbf{r}_i^{(t)}\right]. \tag{1}$$

where $\mathbb{E}_{\boldsymbol{\pi_\theta}, \mu}[\cdot]$ is the expectation with respect to all T length trajectories generated using the stochastic policy π_θ with initial distribution μ and $\Theta \subset \mathbb{R}^s v$ is a compact and convex set.

3 Domain Ontology

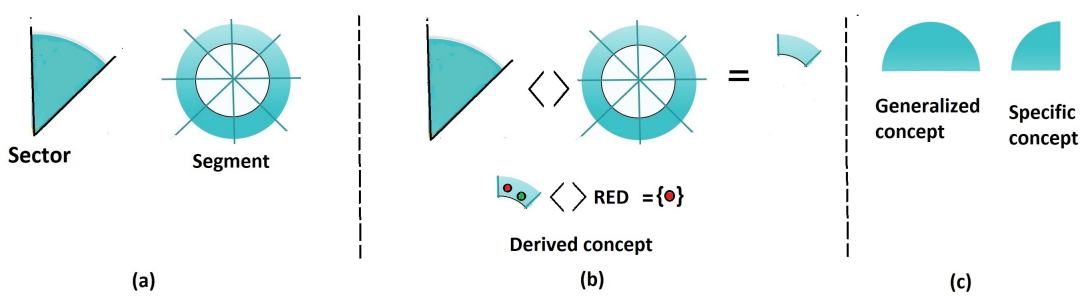

Figure 2: Agent Ontology

The ontology Guarino & Giaretta (1995); Mark et al. (2003) of the agent is the concept space $\mathcal{C} = \mathcal{H} \cup \mathcal{W} \cup \mathcal{B} \cup \{\bot\}$ which consists of a finite collection of segments $\mathcal{H}$, sectors $\mathcal{W}$, colors $\mathcal{B}$ and the `NULL` concept $\bot$. We let $\bar{\mathcal{H}} = \mathcal{H} \cup \{\bot\}$, $\bar{\mathcal{W}} = \mathcal{W} \cup \{\bot\}$ and $\bar{\mathcal{B}} = \mathcal{B} \cup \{\bot\}$. A segment is a strip of region in the 2D plane

encompassed by outer and inner concentric circles (Figure 2 (a)) centered at a certain point. A sector is defined to be a part of a disc made of the arc of the disc centered at a certain point along with its two radii extending to the boundary of the world. These are spatial deixis which are generally perceived relative to the location of the central point. The segments and sectors provide a conceptualization of space that is grounded in the sensory and physical interactions of the agents with the world and one can relate it to the concepts of cardinal directions in the human discourse. In our setting, the space is conceptualized a priori as discrete and categorical. Each node possesses the intensive property of color and we assume that the agents possess the sensory mechanism to capture the hue range of colors. Hence, we also consider colors as concepts. Roughly, $\mathcal{C}$ represents the hierarchical deep structure of concepts (semantic entities) where one can be either specific (finer) or general (coarser), or disjoint than the other (Figure 2 (c)). The concept space $\mathcal{C}$ is equipped with an operation $< \cdot, \cdot >: \mathcal{C} \times \mathcal{C} \rightarrow \mathcal{C}'$, where $\mathcal{C}'$ is the set of derived concepts, which are concepts which can be derived from the basis concepts Andreas (2018); Montague et al. (1970). In our setting, the operation $<>$ is set intersection since our concept space consists of regions and colors. Hence it is both commutative and associative. An illustration is provided in Figure 2 (b). We also maintain a pred-defined injective encoder $\Gamma : \mathcal{C} \rightarrow \mathbb{Z}$ which maps the abstract basis concepts in $\mathcal{C}$ to discrete integers. Given any topic node, the agent can conceptualize the vertex in terms of the tuple <`segment`, `sector,color`> $\in \bar{\mathcal{H}} \times \bar{\mathcal{W}} \times \bar{\mathcal{B}}$ relative to the current location of the agent. It's important to note that there is an abuse of notation in this representation, as $<>$ typically denotes a binary operation, and in this case, it should be interpreted as <`segment`, <`sector, color`>>. For a given vertex $u \in V$, we consider the function $\mathcal{C}_u : V \rightarrow 2^{\bar{\mathcal{H}} \times \bar{\mathcal{W}} \times \bar{\mathcal{B}}}$ which maps vertices to their corresponding conceptualizations relative to the source vertex u. For a given (source, topic) vertex pair (u, x), one can have more than one conceptualization possible, *i.e.*, $\mathcal{C}_u(x) \subseteq \bar{\mathcal{H}} \times \bar{\mathcal{W}} \times \bar{\mathcal{B}}$. Hence our setting can be categorized as "*guessing game*" (Section 1.3.2 of Steels (2012)). The complexity of the guessing game is substantially high due to the inherent ambiguity arising from the existence of more than one possible distinct concept for a given message. This is Quine's "Gavagai" problem also referred to as *Poverty of stimulus* Quine (1960).

Assumption: In this paper, we assume that the ontology possessed by all the agents is commensurable and they all conform to the same ontological framework to avoid inconsistent perspectives and thus evade the Tower of Babel situation Iliadis (2019); Mark et al. (2003). Also, we assume that each agent possesses an episodic memory to hold the entire sequence.

4 Grounded Vocabulary Learning

The lexis (Ψ) of a language is a finite catalog of all q-letter words available a priori to an agent. A vocabulary bidirectionally maps lexis (phonological entities) to meanings (semantic entities) where one is able to evoke the other Ren et al. (2020). This symbolic association is referred to as the property of groundedness. For a population of agents to successfully communicate, there should exist a shared, coherent vocabulary among the population. This implies that the vocabulary possessed by the agents should hold the same meaning for everyone to successfully communicate verbally among themselves. Ideally, the mapping should be isomorphic. Apparently, in every realistic scenario, this is not the case, which transpires into various language characteristics like homonyms and synonyms. Initially, there is no ex-ante meaning associated with the words, and hence no coherence among the agents exists and we aim to foster common grounding among agents incrementally, which is fully shaped by past linguistic experience. This is referred to as the symbol grounding problem Steels (2012). We achieve this through verbal interactions between them, where they extract and reinforce similarities across multiple episodes incrementally through evidence of understanding which can be either positive or negative. This trial and error based calibration process shapes, reshapes, and enforces the mental mapping, where the phonological expressions become more efficient and established through repeated use Bisk et al. (2020); Arrington (1954), and eventually drives the system to a dissipative structure Prigogine (1987) which enables common ground for expressing concepts.

Defintion (Emergent vocabulary): An emergent vocabulary $\mathcal{M}$ is a shared mapping (not necessarily bijective) function between lexis Ψ and the concept space $\mathcal{C}$, *i.e.*, $\mathcal{M} : \Psi \leftrightarrow \mathcal{C}$ collectively agreed upon by all the agents in the population de Saussure (2011). Note that there are $|\mathcal{C}|^{|\Psi|}$ possible vocabularies for all

the agents to agree upon, which makes it unlikely for all agents to converge on the same vocabulary without some mechanism for coordination and consensus.

Definition (Compositionality): A languange is compositional Andreas (2018); Montague et al. (1970) if the utterance of each derived concept is determined by the utterances of its basis concepts. Formally, for the derived concept $c =< g, h, q >$, we have $\mathcal{M}(c) = \mathcal{M}(g)\mathcal{M}(h)\mathcal{M}(q)$, with the implicit operation of concatenation connecting them.

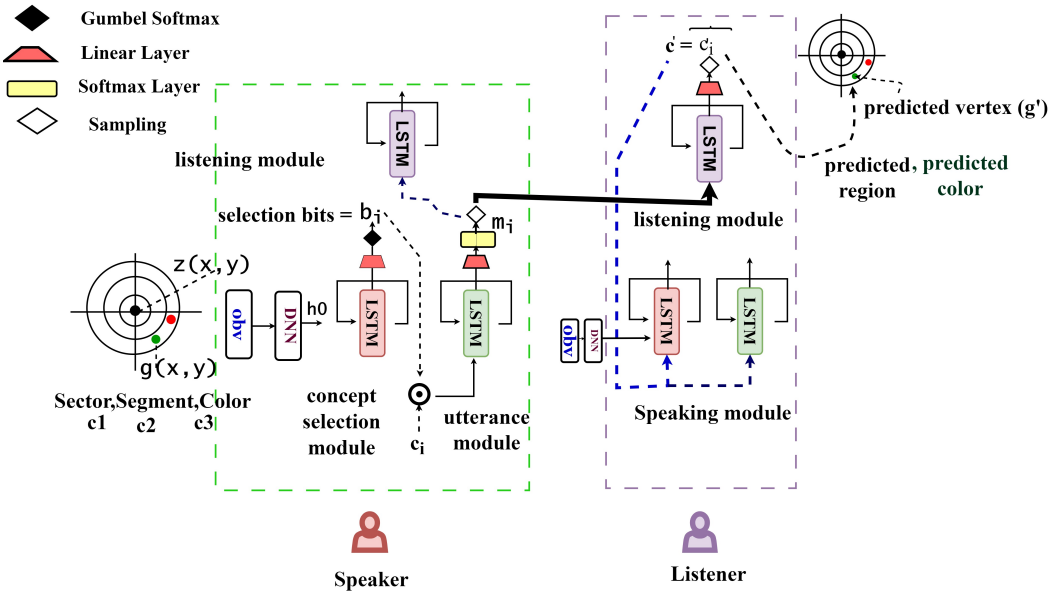

Figure 3: Policy architecture of the semiotic pathway

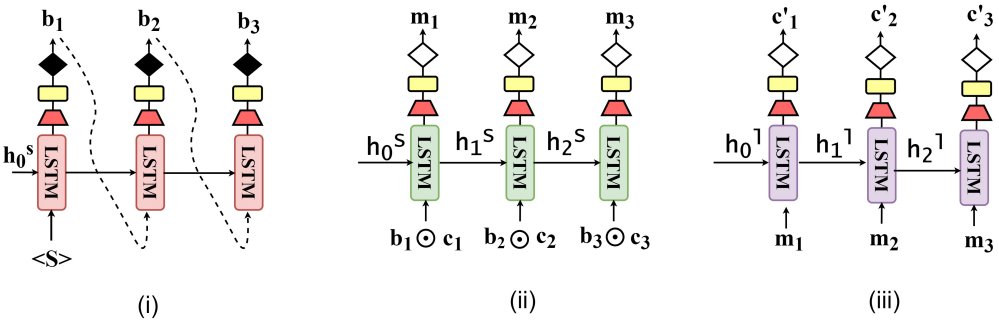

Figure 4: Unfolded view of the respective LSTMs.Best viewed in color

Assumption: During each dialogue, the source and target vertices corresponding to each conversation are chosen uniformly at random.

The probabilistic regular grammar corresponding to the language we consider here is the following:

$$
\begin{aligned}
&D \rightarrow C_1C_2C_3 \textit{ with probability 1}\\
&C_1 \rightarrow h, \textit{ where } h \in \mathcal{M}(\mathcal{H}) \textit{ with probability } \mu(h|C_1)\\
&C_1 \rightarrow \epsilon, \textit{ with probability } \mu(\epsilon|C_1)\\
&C_2 \rightarrow w, \textit{ where } w \in \mathcal{M}(\mathcal{W}) \textit{ with probability } \mu(w|C_2)\\
&C_2 \rightarrow \epsilon, \textit{ with probability } \mu(\epsilon|C_2)\\
&C_3 \rightarrow b, \textit{ where } b \in \mathcal{M}(\mathcal{B}) \textit{ with probability } \mu(w|C_3)\\
&C_3 \rightarrow \epsilon, \textit{ with probability } \mu(\epsilon|C_3)
\end{aligned}
$$

The language is finite and regular and hence learnable in the limit (Gold sense, Theorem 2.6 of Niyogi (2006)) under the above assumption.

4.1 Policy Architecture

The policy architecture of the agent is modeled using stochastic neural networks. Each agent consists of two modules: speaking (concept-selection and utterance) and listening. All the modules are implemented using RNN (recurrent neural networks) to allow for continuous and sequential communication. Here θ, ψ, and ϕ represent the parameters of the utterance network, concept-selection network, and listening network respectively. All the modules of listener and speaker have to synchronize through trial and error for a successful communication language to emerge. In our setting, we perform decentralized learning with decentralized execution Foerster et al. (2016). Our agents are independent learners Tan (1993) and the channel between speaker and listener is non-differentiable, which implies that the back-propagation of the listener does not transmit the gradient backward to the speaker. In our 2D environment, there are N agents and M vertices. The state $\mathcal{S}$ of the game set consists of all relevant details that define the environment. The state of the environment at time t is given by $\mathbf{s}_t = \left[\mathbf{x}^{(1),\ldots,(N)}, \mathbf{z}_t^{(1),\ldots,(N)}, \mathbf{q}^{(1),\ldots,(N)}, \mathbf{u}_t^{(1),\ldots,(N)}\right]^\top \in \mathcal{S}$, where $\mathbf{x}^{(i)} \in \mathbb{R}^2$ is the location of the ith vertex in the world, $\mathbf{z}^{(i)} \in \{1, 2, \ldots, N\}$ is the current location of agent i, $\mathbf{q}^{(i)} \in \mathbb{R}$ is the color of vertex i and $\mathbf{u}_t^{(i)}$ is the utterance in the conversation involving agent i. The speaker agent i locally perceives the environment which characterizes the observation vector of the speaker agent $\mathbf{o}_t^{(i)} \sim \left[\mathbf{z}_t^{(i)}, \mathbf{g}_t^{(i)}, \mathbf{u}_t^{(i)}\mathbf{q}^{(\mathbf{g}_t^{(i)})}, \mathbf{d}^{(1),\ldots,(M)} + \epsilon_d, \mathbf{w}^{(1),\ldots,(M)} + \epsilon_w\right]^\top$, where $\epsilon_d \sim \mathcal{N}(0,1)$ and $\epsilon_w \sim \mathcal{N}(0,1)$ are white Gaussian noises, $\mathbf{g}_t^{(i)} \in \{1, 2 \ldots M\}$ is the topic vertex, and $\mathbf{d}, \mathbf{w}$ represent the distance and the angle of vertices from the speaker's current vertex respectively. The interaction pathway consists of multiple networks across the speaker and listener agents operating sequentially. The concept-selection network π_ψ operates in a one-to-many mode, where the initial hidden vector is obtained through a linear transformation of the observation vector $\mathbf{o}_t$, and the output is fed back as input. This network outputs the conception-selection bit-vector $\mathbf{b}_t$ which is then passed through a differentiable channel to the speaking module π_θ (many-many mode) along with the spatial description $\mathbf{c}_t$ of the topic vertex as $\mathbf{c}_t \bigodot \mathbf{b}_t$, where $\bigodot$ is co-ordinate-wise vector product. The network utters the message $\mathbf{m}_t$ which is transmitted to the listener through a non-differentiable (naive categorical sampling) noise-free channel. We use Gumbel-Softmax Jang et al. (2016); Maddison et al. (2016) based sampling to enable differentiability of concept-selection to utterance channel allowing gradients to flow through the sampling process. The Gumbel-Softmax distribution for a given the parameters $p \in \mathbb{R}^K$ is defined as follows:

$$G(\log p)_k = \frac{\exp((\log p_k + \varepsilon)/\tau)}{\sum_{j=1}^{K} \exp((\log p_j + \varepsilon)/\tau)}, 1 \leq k \leq K,$$

where $G(\log p)_k$ represents the kth element of the one-hot encoding sample G, $\varepsilon \sim Gumbel(0,1)$, and $\tau \in \mathbb{R}$ is the temperature parameter.

The listening module π_ϕ in the listener agent operates in a many-to-many mode, which means it processes the words in the generated message $\mathbf{m}_t$ sequentially and generates a probability distribution $\pi_\phi(\cdot|\mathbf{m}_t)$ over the entire concept space $\mathcal{C}$. This distribution represents the agent's interpretation of the message in terms of different concepts within the concept space. This distribution is further used to generate the listener

interpretation $\mathbf{c}'_t$ through categorical sampling. The complete architecture of the agents is depicted in Figure 3.

5 Performance Measure

The objective function of our language game consists of three components: Regularized communication feedback, description length loss, and mirror loss.

5.1 Regularized, Guided Communication Feedback

Here, we consider the standard RL objective function (finite horizon cumulative reward) with an entropy regularization term. The regularizer offers a few advantages that are conducive to language games. First, entropy regularization encourages exploration and helps prevent early convergence to sub-optimal policies. Second, the resulting policies can serve as a good initialization for fine-tuning to a more specific behavior. Third, the maximum entropy framework provides a better exploration mechanism for seeking out the best mode in a multimodal reward landscape. In the language game, we follow a stochastic, guided feedback mechanism. During a failed interaction, the speaker plausibly guides the listener by pointing out the topic vertex to the listener with a probability $\lambda \in [0, 1]$. This implies that the speaker may or may not provide effective guidance with a certain probability. The speaker and listener subsequently reinforce with respect to the spatial concept $\mathbf{c}'_t$ corresponding to the plausibly communicated topic vertex. This implies that during the interaction between the speaker A and listener B, the interpreted concept $\mathbf{c}'_t$ is taken as

$$\mathbf{c}'_t \sim \lambda \pi_{\phi^B}(\cdot|\mathbf{m}_t) + (1-\lambda)\delta_{\mathbf{c}_t}, \text{ where } \lambda \in [0,1] \text{ and for } E \subseteq \mathbb{R}^k, \delta_x(E) = \begin{cases} 1 \text{ if } x \in E, \\ 0 \text{ othewise.} \end{cases} \tag{2}$$

Here δ_x is the Dirac measure at x which is a singular measure that places all its probability mass at the single point x. In the case of effective guidance, a full reward is associated with the interaction.

5.2 Principle of Least Effort

According to the principle of least effort Zipf (2016); Cancho & Solé (2003), language evolves because speakers of the language tend to simplify their speech in various ways in order to obtain a tradeoff between understanding and effort. When deciding how to express themselves in a language, speakers consider both their present and future communication needs. This drives the speakers to consider linguistic constructs that are effective in meeting their communication goals and efficient in optimizing their labour. A similar hypothesis connecting the overarching fairness between cognitive load and language exposition is the principle of the economy of thought Mach (1898). It suggests that the human mind, with its limited cognitive resources, seeks to represent the infinite complexities of the world in a way that is efficient and economical. From these arguments, we believe that languages tend to evolve in ways that promote the economy of least thought and linguistic effort where the language users communicate using sentences that are relatively easy to produce and comprehend. Hence, in the post-transient phase of language evolution, sentence length tends to decrease Futrell et al. (2015).

5.3 Mirror Networks

A mirror neuron Di Pellegrino et al. (1992); Rizzolatti et al. (1996), strictly defined, is a type of neuron that is fired both when the individual executes certain actions and when it observes a strictly or broadly congruent set of actions. This phenomenon was initially discovered in the motor cortex of macaque and has since attracted significant interest in the field of neuroscience. In our setting, we want the speaking, listening, and concept selection networks of an agent to be "congruent" with each other. Since our networks represent stochastic policies, by congruence, we mean in the Bayesian probabilistic sense. By ensuring congruence between these policies, you're seeking a coherent and harmonious relationship between how the agent generates its responses (speaking) and how it interprets and understands incoming information

(listening). This implies that the calibration pathway has to update all the relevant networks in the direction of congruence. Hence, we consider the following mirror loss:

$$\mathbb{E}\Bigg[\underbrace{\alpha_1 \mathcal{D}_{KL}\left(\pi_{\theta^A}(\cdot|\mathbf{m}) \,\Big\|\, \pi_{\phi^A}(\cdot|\mathbf{m})\right)}_{\text{speaker congruence}} + \underbrace{\alpha_2 \mathcal{D}_{KL}\left(\pi_{\phi^B}(\cdot|\mathbf{c}') \,\Big\|\, \pi_{\theta^B}(\cdot|\mathbf{c}')\right)}_{\text{listener congruence}}$$
$$+ \alpha_3 \underbrace{\mathcal{D}_{KL}\left(\pi_{\phi^B}(\cdot|\mathbf{m}) \,\Big\|\, \pi_{\psi^B}(\cdot|\mathbf{o})\right)}_{\text{concept selection congruence}}\Bigg], \text{ where } \alpha_{1\ldots3} \geq 0,$$

with $\mathcal{D}_{KL}(p_1 \| p_2) = \sum_x \log p_1(x) \frac{\log p_1(x)}{\log p_2(x)}$ is the Kullback-Leibler divergence.

5.4 Poverty of Stimulus

The poverty of stimulus appears in guided feedback scenarios, where the speaker reveals the topic vertex $\mathbf{g}$ (which is the tangible component) at the end of the conversation. However, the conceptualization $C_{\mathbf{z}}(\mathbf{g})$ of the topic vertex g consists of more than one element which makes the message $\mathbf{m}$ of the conversation ambiguous. To address the ambiguity inherent in the poverty of stimulus situation, we distribute the message $\mathbf{m}$ across all the possible conceptualizations $\mathcal{C}_{\mathbf{z}}(\mathbf{g})$ of the topic vertex $\mathbf{g}$ with respect to the source vertex $\mathbf{z}$ and assign different normalized weights or probabilities w_b to each interpretation b based on some predispositions:

$$\log \pi_{\phi_B}(\mathbf{c}'|\mathbf{m}) = \frac{\sum_{b \in \mathcal{C}_{\mathbf{z}}(\mathbf{g})} w_b \log \pi_{\phi_B}(b|\mathbf{m})}{\sum_{b \in \mathcal{C}_{\mathbf{z}}(\mathbf{g})} w_b}, \text{ where } w_b \geq 0. \tag{3}$$

5.5 Objective function

The performance measure $J(\theta, \psi, \phi)$ of the language game is defined as follows: Let $\mathbb{E}_{\mathcal{I}}[\cdot]$ be the expectation induced by the *r.v.s.* $\mathbf{m} \sim \pi_{\theta^A}(\cdot|c)$, $\mathbf{c}' \sim \pi_{\phi^B}(\cdot|m)$, $\mathbf{s} \sim \mu$, $\mathbf{o} = f_A(\mathbf{s})$, $\mathbf{o} \to \mathbf{c}$ and $\mathbb{E}_{\mathcal{I}_t}[\cdot]$ be the expectation induced by the *r.v.s.* $\mathbf{m}_t \sim \pi_{\theta^A}(\cdot|\mathbf{c}_t)$, $\mathbf{b}_t \sim \pi_{\psi^A}(\cdot|\mathbf{o}_t)$, $\mathbf{c}'_t \sim \lambda\ \pi_{\phi^B}(\cdot|\mathbf{m}_t) + (1-\lambda)\delta_{\mathbf{c}_t}$, $\mathbf{s}_t \sim \mu$, $\mathbf{o}_t = f_A(\mathbf{s}_t)$, $\mathbf{o}_t \to \mathbf{c}_t$.

Then $J(\theta, \phi, \psi) = \mathcal{L}_1(\theta, \phi, \psi) + \mathcal{L}_2(\theta, \phi, \psi) + \mathcal{L}_3(\theta, \phi, \psi)$,

$$\text{where } \mathcal{L}_1(\theta, \phi, \psi) = \underbrace{\mathbb{E}_{\mathcal{I}_t}\left[\sum_{t=0}^{T-1} \mathbf{r}_t + \beta \mathcal{H}(\pi_{\theta^A}(\cdot|\mathbf{c}_t)) + \beta \mathcal{H}(\pi_{\phi^B}(\cdot|\mathbf{o}_t))\right]}_{\text{Regularized cumulative reward}}, \beta \geq 0,$$

$$\underbrace{\mathcal{L}_2(\theta, \phi, \psi) = -\mathbb{E}_{\mathcal{I}}\left[\|\mathbf{b}\|_2^2 + \beta' \mathcal{H}(\pi_{\psi^A}(\cdot|\mathbf{s}))\right]}_{\text{Description length loss (Principle of least effort)}}, \beta' \geq 0$$

$$\mathcal{L}_3(\theta, \phi, \psi) = \mathbb{E}_{\mathcal{I}}\Bigg[\alpha_1 \mathcal{D}_{KL}\left(\pi_{\theta^A}(\cdot|\mathbf{m}) \,\Big\|\, \pi_{\phi^A}(\cdot|\mathbf{m})\right) + \alpha_2 \mathcal{D}_{KL}\left(\pi_{\phi^B}(\cdot|\mathbf{c}') \,\Big\|\, \pi_{\theta^B}(\cdot|\mathbf{c}')\right) +$$
$$\alpha_3 \mathcal{D}_{KL}\left(\pi_{\phi^B}(\cdot|\mathbf{m}) \,\Big\|\, \pi_{\psi^B}(\cdot|\mathbf{o})\right)\Bigg] \text{(Mirror loss)},$$

with $\mathcal{H}(\pi(\cdot|s)) = -\sum_a \pi(a \,|\, s) \log \pi(a \,|\, s)$ is the entropy regularizer, where, $\mathcal{H}(\pi(\cdot|s))$ represents the entropy of a policy π conditioned on state s. The entropy measures the uncertainty or randomness associated with the actions chosen by that policy when in a particular state.

Further, we obtain the gradient of J as follows:

$$\nabla J(\theta, \phi, \psi) = \nabla \mathcal{L}_1(\theta, \phi, \psi) + \nabla \mathcal{L}_2(\theta, \phi, \psi) + \nabla \mathcal{L}_3(\theta, \phi, \psi),$$

where

$$\nabla \mathcal{L}_1(\theta, \phi, \psi) = \mathbb{E}_{\mathcal{I}}\Big[(Q_{\mathcal{I}}(\mathbf{s}, \mathbf{m}, \mathbf{b}, \mathbf{c}') - \beta \log \pi_{\theta^A}(\mathbf{m}|\mathbf{c}) - \beta \log \pi_{\phi^B}(\mathbf{c}'|\mathbf{m}) - \beta)(\nabla_{\theta^A} \log \pi_{\theta^A}(\mathbf{m}|\mathbf{c})$$
$$+ \nabla_{\phi^B} \log \pi_{\phi^B}(\mathbf{c}'|\mathbf{m}))\Big], \tag{4}$$

$$\nabla\mathcal{L}_2(\theta,\phi,\psi) = \mathbb{E}_{\mathcal{I}}\left[(-\beta'\log\pi_{\psi^A}(\mathbf{b}|\mathbf{o}) - \beta')\nabla_{\psi^A}\log\pi_{\psi^A}(\mathbf{b}|\mathbf{o})\right] - \mathbb{E}_{\substack{\mathbf{s}\sim\mu,\\ \mathbf{o}=f_A(\mathbf{s})}}\left[\nabla_{\psi^A}\mathbb{E}_{\mathbf{b}\sim\pi_{\psi^A}(\cdot|\mathbf{o})}\left[\|\mathbf{b}\|_2^2\right]\right] \text{ and}$$

$$\nabla\mathcal{L}_3(\theta,\phi,\psi) = \mathbb{E}_{\substack{\mathcal{I},\\ \mathbf{c}'\to\mathbf{b}'}}\Bigg[-\alpha_1\frac{\mathbb{P}(\mathbf{c})}{\mathbb{P}(\mathbf{m})}\nabla_{\phi^A}\log\pi_{\phi^A}(\mathbf{c}|\mathbf{m}) - \alpha_2\frac{\mathbb{P}(\mathbf{m})}{\mathbb{P}(\mathbf{c}')}\nabla_{\theta^B}\log\pi_{\theta^B}(\mathbf{m}|c') - \alpha_3\frac{\mathbb{P}(\mathbf{b}')}{\mathbb{P}(\mathbf{o})}\nabla_{\psi^B}\log\pi_{\psi^B}(\mathbf{b}'|\mathbf{o})\Bigg], \tag{5}$$

where $Q_{\mathcal{I}}(s,m,b,c') = \mathbb{E}_{\mathcal{I}}\left[\sum_{t=0}^{T-1}\mathbf{r}_i^{(t)}|s,m,b,c'\right]$. Here Equation (4) is obtained by appealing to soft policy gradient theorem Shi et al. (2019) and multi-agent policy gradient theorem Zhang et al. (2018).

5.6 Reward Function

We follow a reward mechanism that balances exploration, cooperation, synchronization, accuracy, and efficiency in communication. Agents are trained using a shared reward mechanism by which they learn to cooperate by forming a shared language. To encourage agent exploration, we offer partial and complete rewards, motivating the agent to try different approaches and adapt themselves to make informed decisions during training. Both agents receive a partial reward if the listener infers the right region where the topic vertex is located but fails to identify the topic vertex. This acknowledges the successful transmission of relevant information without complete understanding. A full reward is given if the listener can accurately and unambiguously infer the exact topic vertex from the communicated information. This indicates a high level of successful communication and concept selection. A penalty is given if communication fails in order to discourage the respective concept-vocabulary mapping and to prevent incorrect or ineffective communication choices.

$$\mathbf{r}_t = \begin{cases} \zeta_1\ (\in\mathbb{R}),\ \text{if}\quad g_t = g_t', \\ \zeta_2\ (\in\mathbb{R}\wedge\zeta_2<\zeta_1),\ \text{if}\quad \mathcal{C}_{z_t}(g_t)\cap\mathcal{C}_{z_t}(g_t')\neq\emptyset, \\ \zeta_3\ (\zeta_3\leq 0\wedge\zeta_3<\zeta_2),\ \text{otherwise.} \end{cases} \tag{6}$$

The concept-selection module of the speaker seeks to select the optional spatial description to refer to the topic vertex by deactivating redundant concepts. The mechanism aims to ensure that the sentence corresponding to the generated spatial description is of optimal length to convey the intended meaning effectively. To support optimal word-order selection, we penalize the speaker for choosing a sub-optimal sequence of concepts. In cases where a concept is de-activated, the agent chooses to remain silent at that particular instant of the corresponding generated message. To enable this, the utterance module chooses a "`NULL`" utterance $\mathcal{C}(\perp)$ to indicate silence. The concept of $\perp$ utterance is significant since we do not explicitly impose it a priori, rather it is learned through interactions. In order to promote consistency and coherence in the use of the $\mathcal{C}(\perp)$ utterance across different word categories in a sentence, we employ a strategy to positively reward $\mathbf{r}'$ the speaker for the reuse of the same word for the $\perp$ irrespective of its temporal position in a sentence. This reward system encourages the emergence of a common word for the $\perp$ across different contexts, regardless of its position in the message $\mathbf{u}_t$.

$$\mathbf{r}_t' = \begin{cases} \zeta_1'\ \ (\in\mathbb{R}), & \text{if}\quad |\{\mathcal{M}(a)|a\in\mathbf{u}_t\wedge a=\perp\}| = 1, \\ \zeta_2'\ \ (\zeta_2'<\zeta_1'), & \text{otherwise.} \end{cases} \tag{7}$$

6 Experiments & Discussion

6.1 Experimental Setup

In all the experiments, we consider random initial values for the model parameters. The hyper-parameters (learning rate, batch size, and regularization strength) are fine-tuned through iterative experimentation. The

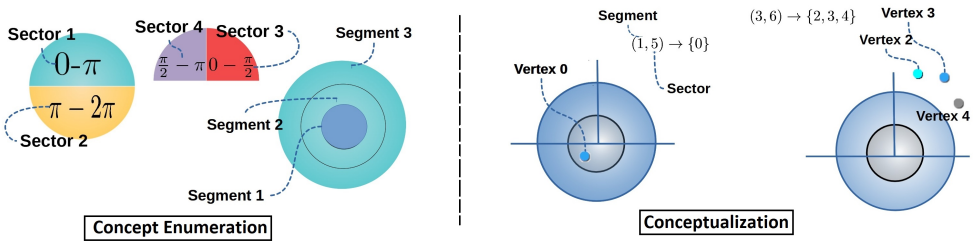

Figure 5: Concept space and the corresponding conceptualization of vertices

feasible reward values for various scenarios are obtained through an exhaustive, yet rational search. In this paper, we consider a 2D world consisting of a complete graph with 5 vertices whose positions are randomly chosen. There are two agents in this world. Each dialogue consists of 100 conversations. The role switching (speaker to listener and listener to speaker) occurs after every 500 iteration through random selection. During every conversation in a dialogue, a random vertex (except the source vertex) is chosen as the topic vertex. In this paper, we consider two-timescale networks Chung et al. (2018) to obtain synchronized convergence, where the utterance network is calibrated using a faster timescale compared to the conception selection network. In this approach, the concept selection network can be considered to be pseudo-stationary, while the utterance network converges with respect to the stationary values of the concept selection network and this cycle repeats itself in the long run. To achieve this, we employ the vanilla stochastic gradient algorithm with learning rates of the respective networks differing by order of magnitude. This can be formalized as follows: Let $\{e_t\}$ and $\{e'_t\}$ be the learning rates of the concept selection network and utterance network respectively. Then $\{e_t\}$ and $\{e'_t\}$ satisfy the following:

$$e_t, e'_t \in (0,1), \sum_{t\geq 0} e_t = \sum_{t\geq 0} e'_t = \infty, \sum_{t\geq 0} e_t^2 + {e'}_t^2 < \infty, \lim_{t\to\infty} \frac{e_t}{e'_t} = 0. \tag{8}$$

The concept space $\mathcal{C}$ consists of 4 sectors, 3 segments and 4 colors. The concept space $\mathcal{C}$ is illustrated in Figure 5. Since there are overlapping sectors (Sectors 1, 3, and 4) we have a poverty of stimulus situation. The lexis size ($|\Psi|$) is 25. The speaking and listening module within the agent's architecture utilizes an LSTM cell. The observation vector o_t by the speaker agent is transformed into a feature vector ($\in \mathbb{R}^{25}$) by passing it through a fully connected neural network. This feature vector forms the hidden input of the concept selection module (ψ) whose hidden size is also taken as 25. The speaking and listening modules are implemented as a single-layer LSTM cell with a hidden size 250. The LSTM networks output the sequence of words or concepts with a maximum length of 3. For the continuous relaxation of categorical distribution within the concept selection module τ of the Gumbel Softmax, a temperature parameter of 0.5 is utilized. Gradients originating from all modules are clipped with a maximum value of 50. Additionally, successful communication rewards both the speaker and listener with 100, and partial success merits a reward of 50.

The following observations are in order:

1. **Guessing games are converging very often**

   The vocabulary mappings developed by the individual agents during the transient phase are random which enables sufficient exploration to drive the evolution towards coherence in a finite number of dialogues. This is corroborated by the convergence of loss functions and the maximization of average reward (average of the rewards of the conversations in a dialogue) as illustrated in Figures 7b and 6b. This is observed in most of the trials ($\approx 95\%$), however, in some cases this behaviour is not observed which is primarily attributed to the random initialization of the neural network weights and the distribution of the source, topic vertices pair chosen for the conversations.

2. **Guessing game achieves a hundred percent success ratio $\Rightarrow$ Shared language emerges**
   The success ratio is defined as the frequency of conversations in a dialogue, where the listener is

Concept ($c \in \mathcal{C}$)	**Value** ($\Gamma(c)$)
$\perp$	0
Segment 1	1
Segment 2	2
Segment 3	3
Sector $0 - \pi$	4
Sector $\pi - 2\pi$	5
Sector $0 - \frac{\pi}{2}$	6
Sector $\frac{\pi}{2} - 2\pi$	7
Color 1	8
Color 2	9
Color 3	10
Color 4	11

Table 1: Encoding scheme

Source	**Conceptualization**
0	$(1,7) \rightarrow \{1\}, (1,\perp) \rightarrow \{1\}, (\perp,7) \rightarrow \{1\}$, $(1,4) \rightarrow \{1\}, (\perp,4) \rightarrow \{2,3,4,1\}$, $(3,6) \rightarrow \{2,3,4\}, (3,\perp) \rightarrow \{2,3,4\}$, $(\perp,6) \rightarrow \{2,3,4\}, (3,4) \rightarrow \{2,3,4\}$
1	$(1,5) \rightarrow \{0\}, (1,\perp) \rightarrow \{0\}, (\perp,5) \rightarrow \{0\}$, $(3,6) \rightarrow \{2,3,4\}, (3,\perp) \rightarrow \{2,3,4\}$, $(\perp,6) \rightarrow \{2,3,4\}, (3,4) \rightarrow \{2,3,4\}$, $(\perp,4) \rightarrow \{2,3,4\}$
2	$(3,5) \rightarrow \{0,1\}, (3,\perp) \rightarrow \{0,1\}$, $(\perp,5) \rightarrow \{0,1\}, (2,4) \rightarrow \{3\}, (2,\perp) \rightarrow \{3\}$, $(\perp,4) \rightarrow \{4,3\}, (2,7) \rightarrow \{3\}, (\perp,7) \rightarrow \{4,3\}$, $(1,7) \rightarrow \{4\}, (1,\perp) \rightarrow \{4\}$, $(1,4) \rightarrow \{4\}$
3	$(3,5) \rightarrow \{0,1\}, (3,\perp) \rightarrow \{0,1\}$, $(\perp,5) \rightarrow \{4,0,1,2\}, (2,5) \rightarrow \{2\}, (2,\perp) \rightarrow \{2\}$, $(1,5) \rightarrow \{4\}, (1,\perp) \rightarrow \{4\}$
4	$(3,5) \rightarrow \{0,1\}, (3,\perp) \rightarrow \{0,1\}$, $(\perp,5) \rightarrow \{2,0,1\}, (1,5) \rightarrow \{2\}, (1,\perp) \rightarrow \{3,2\}$, $(1,4) \rightarrow \{3\}, (\perp,4) \rightarrow \{3\}, (1,7) \rightarrow \{3\}$, $(\perp,7) \rightarrow \{3\}$

Table 2: The conceptualization of vertices with respect to each source vertex (referred to as source in the table). The syntax followed in the table is as follows: For the source vertex $v \in V$ (source column), the conceptualization column contains $(a,b) \in \Gamma(\mathcal{H}) \times \Gamma(\mathcal{W}) \rightarrow \{u \in V | (a,b) \in \mathcal{C}_v(u)\}$

able to identify the topic vertex. The evolution of the success ratio is illustrated in Figure 6a. This implies that all the dialogue interactions in the conversation are successful after a finite number of steps which suggests that the participants are able to achieve their communication objectives (identifying topic vertex) effectively through the medium of language and this is independent of the nature of the agent executing the role of listener and speaker. This further implies that the generated language is mostly unambiguous.

3. **A shared word order emerges in the population**. The agents involved in the language game have demonstrated a remarkable ability to grasp the essential concepts required for effective communication through the application of the principle of least effort. We observe that the order 101 which denotes <`sector, ⊥, color`>, is the emergent word order (Figure 7c), suggesting that for every topic vertex, communicating two concepts is adequate. Figure 7d puts forth a remarkable scenario, where a dip in the minimum of the probabilities of the chosen word orders in a dialogue for each agent (A0 and A1) is observed. This implies that during switch over, word order for some vertices is perturbed which is recovered eventually (min probability of A0 stabilizes after iteration 3500 and that of A1 stabilizes at iteration 5000).

4. **The word for `NULL`($\perp$) emerges and it is the most popular word**
The dynamics of the game settle down to employing a single word to represent the `NULL` concept irrespective of the position of `NULL` in the message, a phenomenon vividly illustrated in Figure 6c. This transformation is additionally accompanied by a noteworthy reduction in the probabilities

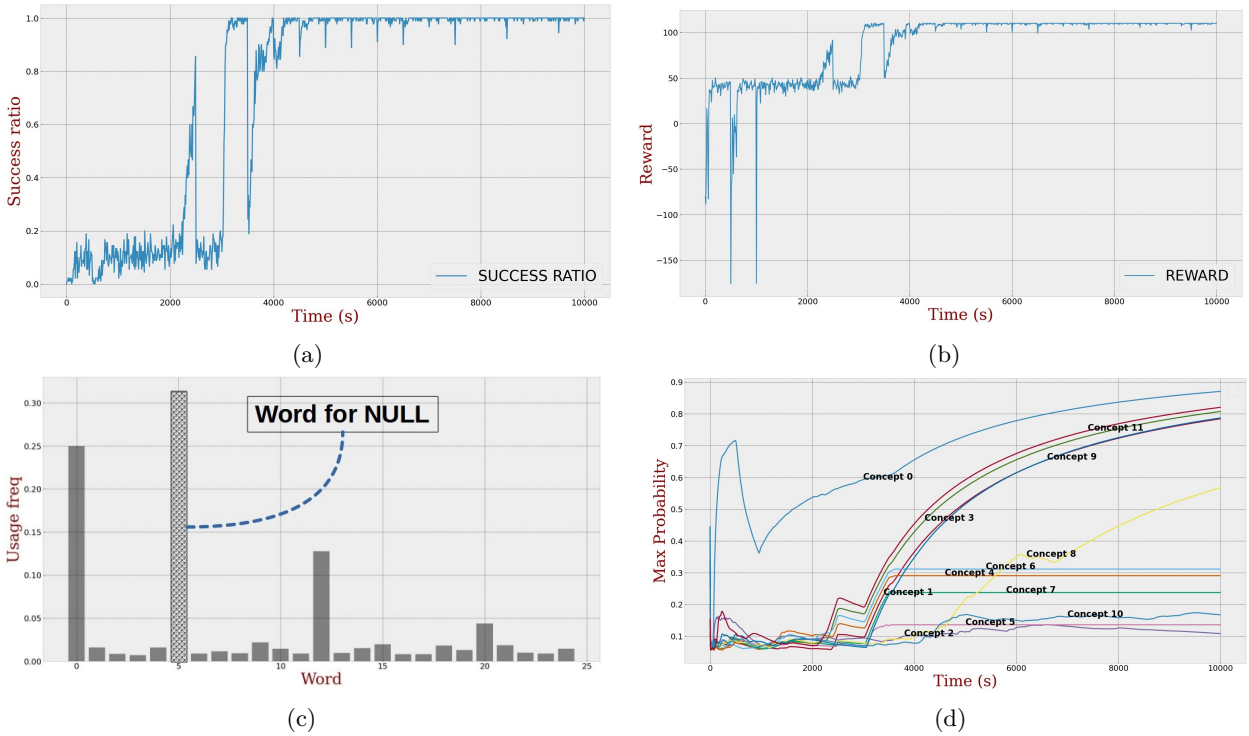

Figure 6: (a)Communication success ratio during a dialogue, (b)The average reward over the interactions in a dialogue, (c)Word usage over time, (d)Evolution of a dominating word for each of the concepts

associated with other words, underscoring the agents' adaptability and the efficiency of their evolving communication system. Since 101 is the globally accepted word order in the population, a `NULL` concept is always present in every conversation which makes its word the most popular word in the process.

5. **Mirror networks synchronize inverse mappings near completely**
   During the interactions, the individual agents calibrate their corresponding mirror networks with respect to their active networks (utterance network for the speaker and listener network for the listener) which ensures continuity during role switching. This is achieved by minimizing the mirror loss which converges to 0 as illustrated in Figure 7b. The continuity in learning is exemplified in Figure 6a, where one can observe the dips in success ratio (due to role switching) eventually decay ensuring near continuity.

6. **Emergence of the shared subset of the lexis**
   From the Figure 6c, one can observe the emergence of only a few dominating words (14 of them) from the lexis ($|\Psi| = 25$) is mapped to the concepts space ($|\mathcal{C}| = 12$). The excess usage of two words is due to the existence of synonyms (by pigeonhole principle) and is justified as follows: In the case of ambiguity faced by the listener while interpreting topic vertex with multiple conceptualizations (specifically sectors) for the uttered word (Gavagai situation), both the sectors are mapped to the uttered word. Hence, there arise evolutionary trajectories where synonyms (multiple word forms referring to the same concept) are associated with these concepts. From Figure 6d, one can observe multiple dominating words (synonyms) existing for concepts 4 and 6 which are overlapping sectors as mentioned in Table 1.

7. **A few concepts are dormant**
   Since the topic of conversation is a vertex that is conceptualized using sectors, segments, and colors, a few sectors and segments never appear in the conversation due to the distribution of vertices in the 2D world. They remain mostly dormant (inactive) and hence no dominating word for these

less-discussed concepts emerges. This is illustrated in Figure 6d, where we allude to concepts $2, 5$ and 10 which remains dormant.

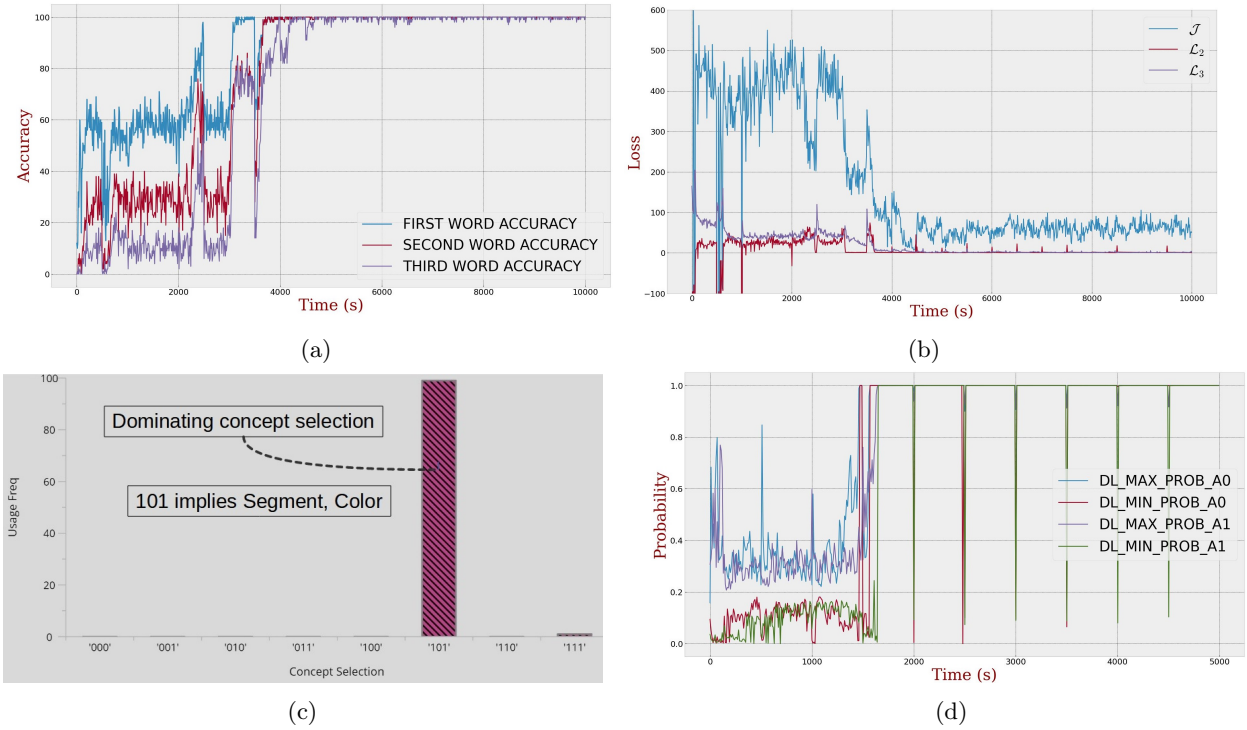

Figure 7: (a) First,second and third word accuracy, (b) The evolution of the total loss, mirror loss and description length loss, (c)Concept selection emergence (order '101' is emerged), (d)Description length network probabilities (c)First/second/third word accuracy over time

8. **For each active concept, there exists at least one dominating word**
From Figure 6d, one can observe that for each active concept, the maximum of the probabilities (conditioned on the concept) over the vocabulary space is converging (some close to 1 and the rest to a uniform distribution over the synonyms). This implies the existence of at least one dominating word associated with every active concept. In other words, for each active concept being discussed, there is a specific word that is most likely to be used when referring to that concept. This further enables an unambiguous language among the population.

9. **Emergence of compositionality:** To illustrate componsitionality more vividly, we consider a smaller graph with $N = 3$ vertices and two homogeneous agents with the space concept space as before. The outcomes are depicted in Figures 8 and 9. Notably, no specific word order emerges; instead, a blend of word combinations dominates the discourse. It is noteworthy that, in this setup, the number of available colors is 3, aligning with the number of vertices. This implies that the agents can communicate the topic vertices by just referring to the color alone. The same holds true for sectors. However, the observed trend reveals that in the majority of conversations (53%), the agents opt for the color alone, and in 15% of instances, it relies on the sector alone. Interestingly, in (28%) of conversations, the agent prefers a combination of segment and sector. This is a sub-optimal limiting behaviour dominated by an optimal concept selection and this scenario arises due to non-convex nature of the objective function operating over a decentralized setting. Similar suboptimal behaviors can be expected in human scenarios. Nevertheless, what stands out is that the agent employs one, sometimes two, and rarely three words or stays silent during the dialogue, mirroring patterns observed in human interactions.

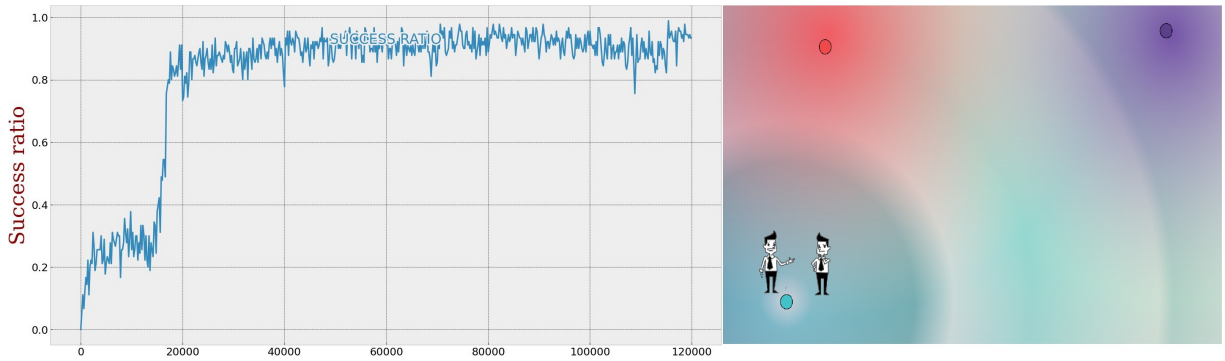

Figure 8: Success ratio for the setting with $N = 3$ vertices and 2 homogeneous agents and the same concept space

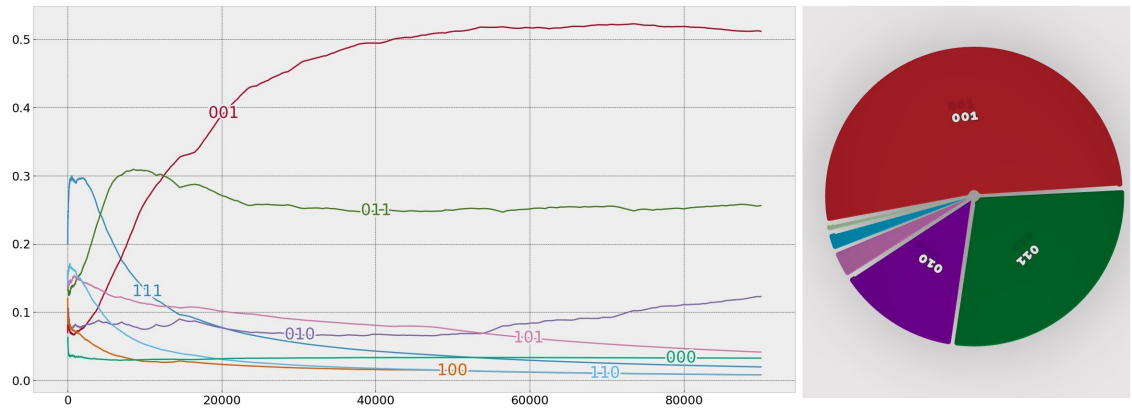

Figure 9: Concept selection emergence for the setting with $N = 3$ vertices and 2 homogeneous agents with the same concept space. The plot is with respect to the frequency ratio from the dialogue utterances. The continuity in the trajectories entails that the distribution over the concept selection space is consistent across the agents

10. **Obeys Zipf Law:** The notion of the principle of least effort which we factored into our setting supports the rise of a natural phenomenon known as Zipf law Aitchison et al. (2016) in the word usage pattern during the round of communication among agents which is supported by Zhu et al. (2018). The Zipf law describes that the occurrence of most popular word occurs twice the number of occurrence of second most common word. We see in the Figure 10 the occurrence of the word decreases exponentially for the lower rank words in the language emerged among agents.

11. **Language emergence at scale**: The agent population is upscaled to observe the emergent behaviour among large populations. We consider complex settings with the number of different agent pairs equal to $12, 30$ and 42. The emergence of a shared language among a larger population is cumbersome which requires a large number of iterations. The underlying policy gradient algorithm develops coherence by reinforcing successful interactions. However, in the case of more agent pairs the probability of propagation of mappings involving successful interaction among the population is minimal. This behaviour is illustrated in Figures 11.

7 Conclusion

In this paper, we develop a computational language game framework to model the factors influencing language dynamics involving a finite number of homogeneous deep neural agents in a guessing game setting.

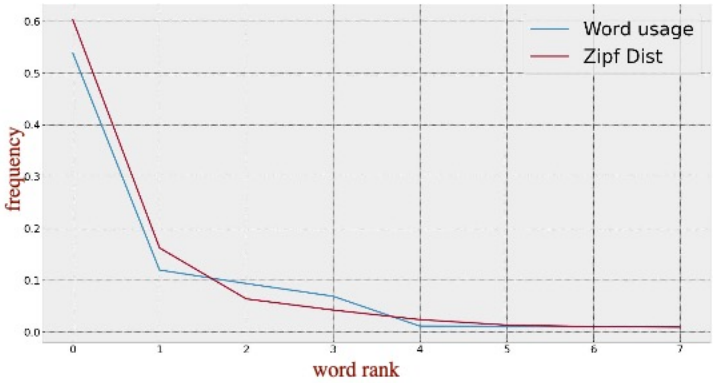

Figure 10: The usage of a word reduces in accordance with their rank supporting the Zipf law

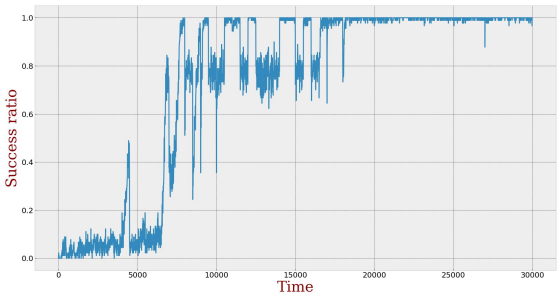

(a)

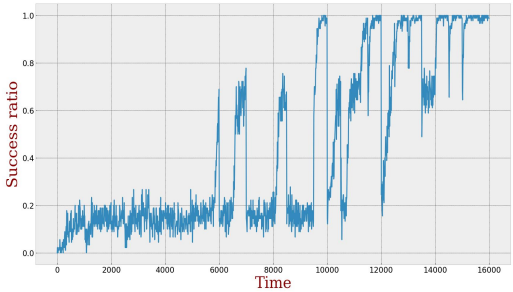

(b)

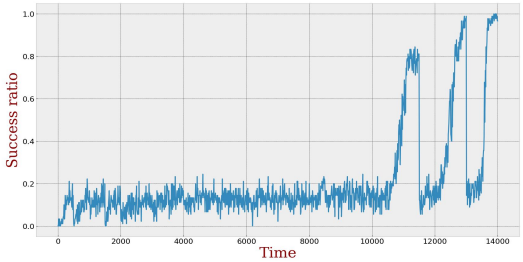

(c)

Figure 11: (a)Plot of success ratio with 12 pairs of agents and 20 vertices. (b)Plot of success ratio with 30 pairs of agents and 5 vertices. (c)Plot of success ratio with 42 pairs of agents and 5 vertices. Here success ratio is defined as the number of successful interactions in a dialogue

We factored silence as a symbol for optimal communication, guided feedback scenario to consider poverty of stimulus. We observe the successful emergence of grounded vocabulary and compositional language structure among agents. Our experimentation involved varying the population, vocabulary and concepts sizes to systematically observe these emergent linguistic patterns. Notably, our findings align with natural phenomena, demonstrating properties such as the principle of least effort, Zipf's law, and the synchronization of inverse mappings.

References

Laurence Aitchison, Nicola Corradi, and Peter E Latham. Zipf's law arises naturally when there are underlying, unobserved variables. *PLoS computational biology*, 12(12):e1005110, 2016.

Jacob Andreas. Measuring compositionality in representation learning. In *International Conference on Learning Representations*, 2018.

Robert L Arrington. Ludwig wittgenstein: Philosophical investigations. In *Central Works of Philosophy v4*, pp. 257–279. Routledge, 1954.

Marco Baroni. Linguistic generalization and compositionality in modern artificial neural networks. *Philosophical Transactions of the Royal Society B*, 375(1791):20190307, 2020.

Yonatan Bisk, Ari Holtzman, Jesse Thomason, Jacob Andreas, Yoshua Bengio, Joyce Chai, Mirella Lapata, Angeliki Lazaridou, Jonathan May, Aleksandr Nisnevich, et al. Experience grounds language. *arXiv preprint arXiv:2004.10151*, 2020.

Ramon Ferrer I Cancho and Ricard V Solé. Least effort and the origins of scaling in human language. *Proceedings of the National Academy of Sciences*, 100(3):788–791, 2003.

Rahma Chaabouni, Eugene Kharitonov, Diane Bouchacourt, Emmanuel Dupoux, and Marco Baroni. Compositionality and generalization in emergent languages. In *Proceedings of the 58th Annual Meeting of the Association for Computational Linguistics*, pp. 4427–4442, Online, July 2020. Association for Computational Linguistics. doi: 10.18653/v1/2020.acl-main.407. URL `https://aclanthology.org/2020.acl-main.407`.

Rahma Chaabouni, Florian Strub, Florent Altché, Eugene Tarassov, Corentin Tallec, Elnaz Davoodi, Kory Wallace Mathewson, Olivier Tieleman, Angeliki Lazaridou, and Bilal Piot. Emergent communication at scale. In *International Conference on Learning Representations*, 2022.

Noam Chomsky. *Language and mind*. Cambridge University Press, 2006.

Wesley Chung, Somjit Nath, Ajin Joseph, and Martha White. Two-timescale networks for nonlinear value function approximation. In *International conference on learning representations*, 2018.

Allan Dafoe, Edward Hughes, Yoram Bachrach, Tantum Collins, Kevin R McKee, Joel Z Leibo, Kate Larson, and Thore Graepel. Open problems in cooperative ai. *arXiv preprint arXiv:2012.08630*, 2020.

Gautier Dagan, Dieuwke Hupkes, and Elia Bruni. Co-evolution of language and agents in referential games. *arXiv preprint arXiv:2001.03361*, 2020.

LEWIS David. Convention: a philosophical study, 1969.

Ferdinand de Saussure. *Course in general linguistics*. Columbia University Press, 2011.

Giuseppe Di Pellegrino, Luciano Fadiga, Leonardo Fogassi, Vittorio Gallese, and Giacomo Rizzolatti. Understanding motor events: a neurophysiological study. *Experimental brain research*, 91:176–180, 1992.

Tom Eccles, Yoram Bachrach, Guy Lever, Angeliki Lazaridou, and Thore Graepel. Biases for emergent communication in multi-agent reinforcement learning. *Advances in neural information processing systems*, 32, 2019.

Jakob Foerster, Ioannis Alexandros Assael, Nando De Freitas, and Shimon Whiteson. Learning to communicate with deep multi-agent reinforcement learning. *Advances in neural information processing systems*, 29, 2016.

Richard Futrell, Kyle Mahowald, and Edward Gibson. Large-scale evidence of dependency length minimization in 37 languages. *Proceedings of the National Academy of Sciences*, 112(33):10336–10341, 2015.

Emilia Garcia-Casademont and Luc Steels. Insight grammar learning. *Journal of Cognitive Science*, 17(1), 2016.

Miquel Cornudella Gaya, Thierry Poibeau, and Remi van Trijp. The role of intrinsic motivation in artificial language emergence: a case study on colour. In *26th International Conference on Computational Linguistics (COLING 2016)*, pp. 1646–1656, 2016.

Laura Graesser, Kyunghyun Cho, and Douwe Kiela. Emergent linguistic phenomena in multi-agent communication games. In *2019 Conference on Empirical Methods in Natural Language Processing and 9th International Joint Conference on Natural Language Processing, EMNLP-IJCNLP 2019*, pp. 3700–3710. Association for Computational Linguistics, 2019.

Nicola Guarino and Pierdaniele Giaretta. Ontologies and knowledge bases. *Towards very large knowledge bases*, pp. 1–2, 1995.

Shubham Gupta, Rishi Hazra, and Ambedkar Dukkipati. Networked multi-agent reinforcement learning with emergent communication. In *Proceedings of the 19th International Conference on Autonomous Agents and MultiAgent Systems*, AAMAS '20, pp. 1858–1860, Richland, SC, 2020. International Foundation for Autonomous Agents and Multiagent Systems. ISBN 9781450375184.

Serhii Havrylov and Ivan Titov. Emergence of language with multi-agent games: Learning to communicate with sequences of symbols. *Advances in neural information processing systems*, 30, 2017.

Andrew Iliadis. The tower of babel problem: making data make sense with basic formal ontology. *Online Information Review*, 43(6):1021–1045, 2019.

Eric Jang, Shixiang Gu, and Ben Poole. Categorical reparameterization with gumbel-softmax. *arXiv preprint arXiv:1611.01144*, 2016.

Ivana Kajić, Eser Aygün, and Doina Precup. Learning to cooperate: Emergent communication in multi-agent navigation. *arXiv preprint arXiv:2004.01097*, 2020.

Eugene Kharitonov, Rahma Chaabouni, Diane Bouchacourt, and Marco Baroni. Entropy minimization in emergent languages. In *International Conference on Machine Learning*, pp. 5220–5230. PMLR, 2020.

Satwik Kottur, José MF Moura, Stefan Lee, and Dhruv Batra. Natural language does not emerge'naturally'in multi-agent dialog. *arXiv preprint arXiv:1706.08502*, 2017.

Angeliki Lazaridou and Marco Baroni. Emergent multi-agent communication in the deep learning era. *arXiv preprint arXiv:2006.02419*, 2020.

Angeliki Lazaridou, Alexander Peysakhovich, and Marco Baroni. Multi-agent cooperation and the emergence of (natural) language. In *5th International Conference on Learning Representations, ICLR 2017, Toulon, France, April 24-26, 2017, Conference Track Proceedings*, 2017.

Angeliki Lazaridou, Karl Moritz Hermann, Karl Tuyls, and Stephen Clark. Emergence of linguistic communication from referential games with symbolic and pixel input. *arXiv preprint arXiv:1804.03984*, 2018.

Angeliki Lazaridou, Anna Potapenko, and Olivier Tieleman. Multi-agent communication meets natural language: Synergies between functional and structural language learning. In *Proceedings of the 58th Annual Meeting of the Association for Computational Linguistics*, pp. 7663–7674, Online, July 2020. Association for Computational Linguistics. doi: 10.18653/v1/2020.acl-main.685. URL `https://aclanthology.org/2020.acl-main.685`.

Fushan Li and Michael Bowling. Ease-of-teaching and language structure from emergent communication. *Advances in neural information processing systems*, 32, 2019.

Toru Lin, Jacob Huh, Christopher Stauffer, Ser Nam Lim, and Phillip Isola. Learning to ground multi-agent communication with autoencoders. *Advances in Neural Information Processing Systems*, 34:15230–15242, 2021.

Michael L Littman. Markov games as a framework for multi-agent reinforcement learning. In *Machine learning proceedings 1994*, pp. 157–163. Elsevier, 1994.

Ernst Mach. *Popular scientific lectures*. Number 21. Open Court Publishing Company, 1898.

Chris J Maddison, Andriy Mnih, and Yee Whye Teh. The concrete distribution: A continuous relaxation of discrete random variables. *arXiv preprint arXiv:1611.00712*, 2016.

David M Mark, Werner Kuhn, Barry Smith, and Andrew G Turk. Ontology, natural language and information systems: Implications of cross-linguistic studies of geographic terms. In *6th AGILE conference on Geographic Information Science*, 2003.

Volodymyr Mnih, Koray Kavukcuoglu, David Silver, Alex Graves, Ioannis Antonoglou, Daan Wierstra, and Martin Riedmiller. Playing atari with deep reinforcement learning. *arXiv preprint arXiv:1312.5602*, 2013.

Richard Montague et al. Universal grammar. *1974*, pp. 222–46, 1970.

Igor Mordatch and Pieter Abbeel. Emergence of grounded compositional language in multi-agent populations. In *Thirty-second AAAI conference on artificial intelligence*, 2018.

Partha Niyogi. *The computational nature of language learning and evolution*. MIT press Cambridge, MA, 2006.

Ilya Prigogine. Exploring complexity. *European journal of operational research*, 30(2):97–103, 1987.

Martin L Puterman. *Markov decision processes: discrete stochastic dynamic programming*. John Wiley & Sons, 2014.

Shuwen Qiu, Sirui Xie, Lifeng Fan, Tao Gao, Jungseock Joo, Song-Chun Zhu, and Yixin Zhu. Emergent graphical conventions in a visual communication game. *Advances in Neural Information Processing Systems*, 35:13119–13131, 2022.

Willard Van Orman Quine. Word and object mit press. *Cambridge MA*, 1960.

Yi Ren, Shangmin Guo, Matthieu Labeau, Shay B Cohen, and Simon Kirby. Compositional languages emerge in a neural iterated learning model. *arXiv preprint arXiv:2002.01365*, 2020.

Cinjon Resnick, Abhinav Gupta, Jakob Foerster, Andrew M Dai, and Kyunghyun Cho. Capacity, bandwidth, and compositionality in emergent language learning. In *Proceedings of the 19th International Conference on Autonomous Agents and MultiAgent Systems*, pp. 1125–1133, 2020.

Mathieu Rita, Rahma Chaabouni, and Emmanuel Dupoux. " lazimpa": Lazy and impatient neural agents learn to communicate efficiently. *arXiv preprint arXiv:2010.01878*, 2020.

Mathieu Rita, Florian Strub, Jean-Bastien Grill, Olivier Pietquin, and Emmanuel Dupoux. On the role of population heterogeneity in emergent communication. *arXiv preprint arXiv:2204.12982*, 2022.

Giacomo Rizzolatti, Luciano Fadiga, Vittorio Gallese, and Leonardo Fogassi. Premotor cortex and the recognition of motor actions. *Cognitive brain research*, 3(2):131–141, 1996.

Wenjie Shi, Shiji Song, and Cheng Wu. Soft policy gradient method for maximum entropy deep reinforcement learning. In *Proceedings of the 28th International Joint Conference on Artificial Intelligence*, pp. 3425–3431, 2019.

BF Skinner. The evolution of verbal behavior. *Journal of the Experimental analysis of Behavior*, 45(1):115, 1986.

Luc Steels. The synthetic modeling of language origins. *Evolution of communication*, 1(1):1–34, 1997.

Luc Steels. Evolving grounded communication for robots. *Trends in cognitive sciences*, 7(7):308–312, 2003.

Luc Steels. Grounding language through evolutionary language games. In *Language grounding in robots*, pp. 1–22. Springer, 2012.

Sainbayar Sukhbaatar, Rob Fergus, et al. Learning multiagent communication with backpropagation. *Advances in neural information processing systems*, 29, 2016.

Ming Tan. Multi-agent reinforcement learning: Independent vs. cooperative agents. In *Proceedings of the tenth international conference on machine learning*, pp. 330–337, 1993.

Mycal Tucker, Roger Levy, Julie A Shah, and Noga Zaslavsky. Trading off utility, informativeness, and complexity in emergent communication. *Advances in neural information processing systems*, 35:22214–22228, 2022.

Kyle Wagner, James A Reggia, Juan Uriagereka, and Gerald S Wilkinson. Progress in the simulation of emergent communication and language. *Adaptive Behavior*, 11(1):37–69, 2003.

Sida I. Wang, Percy Liang, and Christopher D. Manning. Learning language games through interaction. In *Proceedings of the 54th Annual Meeting of the Association for Computational Linguistics (Volume 1: Long Papers)*, pp. 2368–2378, Berlin, Germany, August 2016. Association for Computational Linguistics. doi: 10.18653/v1/P16-1224. URL `https://aclanthology.org/P16-1224`.

Ludwig Wittgenstein. *Philosophical investigations*. John Wiley & Sons, 1954.

Kaiqing Zhang, Zhuoran Yang, Han Liu, Tong Zhang, and Tamer Basar. Fully decentralized multi-agent reinforcement learning with networked agents. In *International Conference on Machine Learning*, pp. 5872–5881. PMLR, 2018.

Yueying Zhu, Benwei Zhang, Qiuping A Wang, Wei Li, and Xu Cai. The principle of least effort and zipf distribution. In *Journal of Physics: Conference Series*, volume 1113, pp. 012007. IOP Publishing, 2018.

George Kingsley Zipf. *Human behavior and the principle of least effort: An introduction to human ecology*. Ravenio Books, 2016.