Graph-level Representation Learning with Joint-Embedding Predictive Architectures

Anonymous authors
Paper under double-blind review

Abstract

Joint-Embedding Predictive Architectures (JEPAs) have recently emerged as a novel and powerful technique for self-supervised representation learning. They aim to learn an energy-based model by predicting the latent representation of a target signal y from the latent representation of a context signal x. JEPAs bypass the need for negative and positive samples, traditionally required by contrastive learning while avoiding the overfitting issues associated with generative pretraining. In this paper, we show that graph-level representations can be effectively modeled using this paradigm by proposing a Graph Joint-Embedding Predictive Architecture (Graph-JEPA). In particular, we employ masked modeling and focus on predicting the *latent* representations of masked subgraphs starting from the latent representation of a context subgraph. To endow the representations with the implicit hierarchy that is often present in graph-level concepts, we devise an alternative prediction objective that consists of predicting the coordinates of the encoded subgraphs on the unit hyperbola in the 2D plane. Through multiple experimental evaluations, we show that Graph-JEPA can learn highly semantic and expressive representations, as shown by the downstream performance in graph classification, regression, and distinguishing non-isomorphic graphs. The code will be made available upon acceptance.

1 Introduction

Graph data is ubiquitous in the real world due to its ability to universally abstract various concepts and problems (Ma & Tang, 2021; Veličković, 2023). To deal with this widespread data structure, Graph Neural Networks (GNNs) (Scarselli et al., 2008; Kipf & Welling, 2016a; Gilmer et al., 2017; Veličković et al., 2017) have established themselves as a staple solution. Nevertheless, most applications of GNNs usually rely on ground-truth labels for training. The growing amount of graph data in fields such as bioinformatics, chemoinformatics, and social networks makes manual labeling laborious, sparking significant interest in unsupervised graph representation learning.

A particularly emergent area in this line of research is self-supervised learning (SSL). In SSL, alternative forms of supervision are created stemming from the input signal. This process is then typically followed by invariance-based or generative-based pretraining (Liu et al., 2023; Assran et al., 2023). Invariance-based approaches optimize the model to produce comparable embeddings for different views of the input signal. A common paradigm associated with this procedure is contrastive learning (Tian et al., 2020). Typically, these alternative views are created by a data augmentation procedure. The views are then passed through their respective encoder networks (which may share weights), as shown in Fig. 1a. Finally, an energy function, usually framed as a distance, acts on the latent embeddings. In the graph domain, several works have applied contrastive learning by designing graph-specific augmentations (You et al., 2020), using multi-view learning (Hassani & Khasahmadi, 2020) and even adversarial learning (Suresh et al., 2021). Invariance-based pretraining is effective but comes with several drawbacks i.e., the necessity to augment the data and process negative samples, which limits computational efficiency. In order to learn semantic embeddings that are useful for downstream tasks, the augmentations must also be non-trivial.

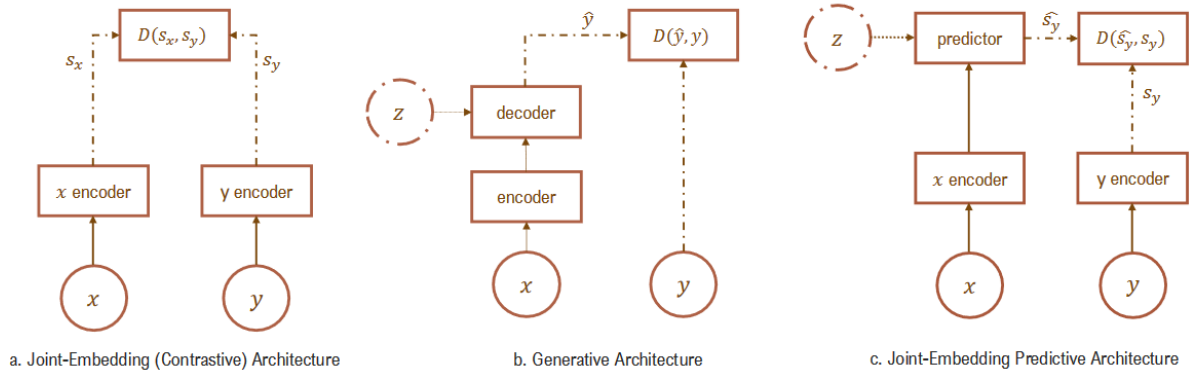

Figure 1: Illustration of the SSL approaches discussed in this paper: (a) Joint-Embedding (Contrastive) Architectures learn to create similar embeddings for inputs x and y that are compatible with each other and dissimilar embeddings otherwise. This compatibility is implemented in practice by creating different views of the input data. (b) Generative Architectures reconstruct a signal y from an input signal x by conditioning the decoder network on additional (potentially latent) variables z. (c) Joint-Embedding Predictive Architectures act as a bridge: They utilize a predictor network that processes the context x and is conditioned on additional (potentially latent) variables to predict the embedding of the target y *in latent space*.

Generative-based pretraining methods, on the other hand, typically remove or corrupt portions of the input and predict them using an autoencoding procedure (Vincent et al., 2010; He et al., 2022) or rely on autoregressive modeling (Brown et al., 2020; Hu et al., 2020). Fig. 1b depicts the typical instantiation of these methods: The input signal x is fed into an encoder network that constructs the latent representation, and from it a decoder generates $\hat{y}$, the data corresponding to the target signal y. The energy function is then applied in data space, often through a reconstruction error. Generative models generally display strong overfitting tendencies van den Burg & Williams (2021) and can be non-trivial to train due to issues such as mode collapse Adiga et al. (2018). Moreover, the features they learn are not always useful for downstream tasks Meng et al. (2017). An intuitive explanation of this problem is that generative models have to estimate a data distribution that is usually quite complex, so the latent representations must be directly descriptive of the whole data space Loaiza-Ganem et al. (2022). This can become even more problematic for graphs because they live in a non-Euclidean and inhomogenous data space. Despite the aforementioned issues, masked autoencoding has recently shown promising results also in the graph domain with appropriately designed models (Hou et al., 2022; Tan et al., 2023).

Inspired by the innovative Joint-Embedding Predictive Architecture (JEPA) (LeCun, 2022; Assran et al., 2023), we propose Graph-JEPA, a JEPA for the graph domain that can learn graph-level representations by bridging contrastive and generative models. As illustrated in Fig. 1c, a JEPA has two encoder networks that receive the input signals and produce the corresponding representations. The two encoders can potentially be different models and don't need to share weights. A predictor module outputs a prediction of the latent representation of one signal based on the other, possibly conditioned on another variable. Graph-JEPA does not require any negative samples or complex data augmentation, and by operating in the latent space avoids the pitfalls associated with learning high-level details needed to fit the data distribution. However, the graph domain presents several challenges needed to properly design such an architecture: context and target extraction, designing a latent prediction task optimal for graph-level concepts, and learning expressive representations. In response to these questions, we equip Graph-JEPA with a specific masked modeling objective. The input graph is first divided into several subgraphs, and then the latent representation of randomly chosen target subgraphs is predicted given a context subgraph. The subgraph representations are consequently pooled to create a graph-level representation that can be used for downstream tasks.

The nature of graph-level concepts is often assumed to be hierarchical (Ying et al., 2018). We conjecture that the typical latent reconstruction objective used in current JEPA formulations is not enough to provide optimal downstream performance. To this end, we design a prediction objective that starts by expressing

the target subgraph encoding as a high-dimensional description of the hyperbolic angle. The predictor module is then tasked with predicting the location of the target in the 2D unit hyperbola. This prediction is compared with the target coordinates obtained by using the aforementioned hyperbolic angle. In this self-predictive setting, we explain why the stop-gradient operation and a simple predictor parametrization are useful to prevent representation collapse. To experimentally validate our approach, we evaluate Graph-JEPA against established contrastive and generative graph-level SSL methods across various graph datasets from different domains. Our proposed method demonstrates superior performance, outperforming most competitors while maintaining efficiency and ease of training. Notably, we observe from our experiments that Graph-JEPA can run up to 2.5x faster than Graph-MAE (Hou et al., 2022) and 8x faster than MVGRL (Hassani & Khasahmadi, 2020). Finally, we empirically demonstrate Graph-JEPA's ability to learn highly expressive graph representations by showing that a linear classifier trained on the learned representations almost perfectly distinguishes pairs of non-isomorphic graphs that the 1-WL test cannot differentiate.

2 Related work

2.1 Self-Supervised Graph Representation Learning

Graph Neural Networks (GNNs)(Wu et al., 2019; Scarselli et al., 2008; Kipf & Welling, 2016a; Veličković et al., 2017) are now established solutions to different graph machine learning problems such as node classification, link prediction, and graph classification. Nevertheless, the cost of labeling graph data is quite high, given the immense variability of graph types and the information they can represent. To alleviate this problem, SSL on graphs has become a research frontier, where we can distinguish between two major groups of methods(Xie et al., 2022b; Liu et al., 2023):

Contrastive Methods. Contrastive learning methods usually minimize an energy function (Hinton, 2002; Gutmann & Hyvärinen, 2010) between different views of the same data. InfoGraph (Sun et al., 2019) maximizes the mutual information between the graph-level representation and the representations of substructures at different scales. GraphCL (You et al., 2020) works similarly to distance-based contrastive methods in the imaging domain. The authors first propose four types of graph augmentations and then perform contrastive learning based on them. The work of (Hassani & Khasahmadi, 2020) goes one step further by contrasting structural views of graphs. They also show that a large number of views or multiscale training does not seem to be beneficial, contrary to the image domain. Another popular research direction for contrastive methods is learning graph augmentations and how to leverage them efficiently (Suresh et al., 2021; Jin et al., 2021). Contrastive learning methods typically require a lot of memory due to data augmentation and negative samples. Graph-JEPA is much more efficient than typical formulations of these architectures, given that it does not require any augmentations or negative samples. Another major difference is that the prediction in latent space in JEPAs is done through a separate predictor network rather than using the common Siamese structure (Bromley et al., 1993)(Fig. 1a vs. 1c).

Generative Methods. The goal of generative models is to recover the data distribution, an objective that is typically implemented through a reconstruction process. In the graph domain, most generative architectures that are also used for SSL are extensions of Auto-Encoder (AE) models (Hinton & Zemel, 1993) architectures. These models learn an embedding from the input data and then use a reconstruction objective with (optional) regularization to learn the data distribution. Kipf & Welling (2016b) extended the framework of AEs and VAEs (Kingma & Welling, 2013) to graphs by using a GNN as an encoder and the reconstruction of the adjacency matrix as the training objective. However, the results on downstream tasks with embeddings learned in this way are often unsatisfactory compared with contrastive learning methods, a tendency also observed in other domains (Liu et al., 2023). A recent and promising direction is masked autoencoding (MAE) (He et al., 2022), which has proved to be a very successful framework for the image and text domains. GraphMAE (Hou et al., 2022) is an instantiation of MAEs in the graph domain, where the node attributes are perturbed and then reconstructed, providing a paradigm shift from the structure learning objective of GAEs. S2GAE (Tan et al., 2023) is one of the latest GAEs, which focuses on reconstructing the topological structure but adds several auxiliary objectives and additional designs. Our architecture differs

from generative models in that it learns to predict directly in the latent space, thereby bypassing the necessity of remembering and overfitting high-level details that help maximize the data evidence (Fig. 1b vs. 1c).

2.2 Joint-Embedding Predictive Architectures

Joint-Embedding Predictive Architectures (LeCun, 2022) are a recently proposed design for SSL. The idea is similar to both generative and contrastive approaches, yet JEPAs are non-generative since they cannot directly predict y from x, as shown in Fig. 1c. The energy of a JEPA is given by the prediction error in the embedding space, not the input space. These models can intuitively be understood as a way to capture abstract dependencies between x and y, potentially given another latent variable z. It is worth noting that the different models comprising the architecture may differ in terms of structure and parameters. An in-depth explanation of Joint-Embedding Predictive Architectures and their connections to human representation learning is provided by LeCun (2022). Some works acknowledged that latent self-predictive architectures were effective (Grill et al., 2020; Chen & He, 2021) even before JEPAs effectively became synonymous with this concept. Inspired by these trends, a number of related works have tried to employ latent prediction objectives for graph SSL, showing advantages mostly compared to contrastive learning. Thakoor et al. (2021) perform latent self-prediction on augmented views of a graph in a similar fashion to BYOL (Grill et al., 2020), while Zhang et al. (2021) rely on ideas from Canonical Correlation Analysis to frame a learning objective that preserves feature invariance and forces decorrelation when necessary. The work of Lee et al. (2022) presents a model that learns latent positive examples through a k-NN and clustering procedure in the transductive setting, while Xie et al. (2022a) combine instance-level reconstruction (generative pretraining) and feature-level invariance (latent prediction). Given that these models learn using a latent self-predictive objective, similar to ours, we will refer to them also using the term self-predictive in the rest of the paper. Unlike previously proposed methods, Graph-JEPA operates exclusively in the latent space and implements a novel training task without the need for data augmentation. At the current state of the art, the JEPA framework has been implemented for images (Assran et al., 2023), video(Bardes et al., 2023b;a), and audio (Fei et al., 2023). We propose the first architecture implementing the modern JEPA principles for the graph domain and use it to learn graph-level representations.

3 Method

A general overview. We consider graphs G defined as $G = (V, E)$ where $V = \{v_1 \dots v_N\}$ is the set of nodes, with a cardinality $|V| = N$, and $E = \{e_1 \dots e_M\}$ is the set of edges, with a cardinality $|E| = M$. For simplicity of the exposition, we consider symmetric, unweighted graphs, although our method can be generalized to weighted or directed graphs. In this setting, G can be represented by an adjacency matrix $A \in \{0, 1\}^{N \times N}$, with $A_{ij} = 1$ if nodes v_i and v_j are connected and 0 otherwise. Fig. 2 provides the overview of the proposed architecture. The high-level idea of Graph-JEPA is to divide the input graph into subgraphs (patches) (He et al., 2023) and then predict the representation of a randomly chosen target subgraph from the representation of a single context subgraph (Assran et al., 2023). Again, we would like to stress that this masked modeling objective is realized in latent space without needing negative (or positive) samples. The subgraph representations are then pooled to create a vector representation for the whole graph, i.e., a graph-level representation. Therefore, the learning procedure consists of a sequence of operations: 1. Spatial Partitioning; 2. Subgraph Embedding; 3. Context and Target Encoding; 4. Latent Target Prediction.

3.1 Spatial Partitioning

We base the initial part of our architecture on the recent work of (He et al., 2023), but similar ideas consisting of graph partitioning have been proposed before for Graph SSL (Jin et al., 2020). This step consists of creating different subgraphs (patches), similar to how Vision Transformers (ViT) (Dosovitskiy et al., 2020) operate on images. We rely on the METIS (Karypis & Kumar, 1998) graph clustering algorithm, which partitions a graph into a pre-defined, non-overlapping number of clusters p (Fig. 2a), such that the number of within-cluster links is much higher than between-cluster links. Note that having non-overlapping subgraphs can be problematic since edges can be lost in this procedure, and it is possible to end up with empty "subgraphs". In order to maintain a simple notion of locality in each subgraph and avoid completely

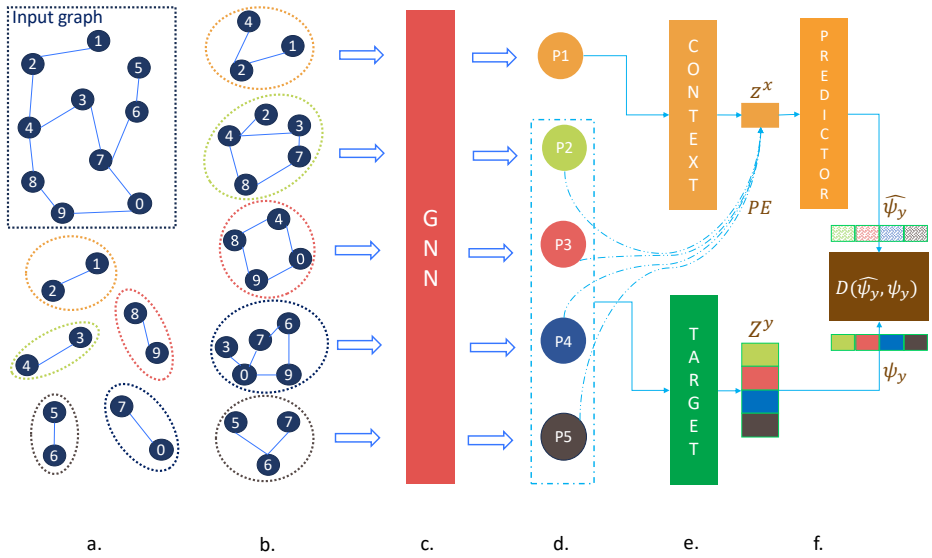

Figure 2: A complete overview of Graph-JEPA. We first extract non-overlapping subgraphs (patches) (a.), perform a 1-hop neighborhood expansion (b.), and encode the subgraphs with a GNN (c.). After the subgraph encoding, one is randomly picked as the context and m others as the targets (d.), and they are fed into their respective encoders (e.). The embeddings generated from the target encoder are used to produce the target subgraphs' coordinates ψ_y. Finally, the predictor network is tasked with directly predicting the coordinates $\hat{\psi}_y$ for each target subgraph based on the context embedding and the positional embedding of each target subgraph (f.). A regression loss acts as the energy function D between the predicted and target coordinates. Note that the extracted subgraphs in (a.) and (b.) are meant for illustrative purposes only. The number of nodes in each subgraph can vary.

empty subgraphs, a one-hop neighborhood expansion[1] of the nodes in each extracted subgraph is performed (Fig. 2b).

3.2 Subgraph Embedding

After partitioning the graph, we learn a representation for each subgraph through a GNN (Fig. 2c.). The specific choice of the GNN is arbitrary and depends on what properties one wishes to induce in the representation. The learned node embeddings are mean pooled to create a vector representation for each subgraph: $\{h_1 ... h_p\}, h \in \mathbb{R}^d$. Given that these embeddings will be used as context or target variables, providing additional information regarding the subgraphs is key in order to guide the predictor network. Otherwise, the prediction task might be too difficult. Thus, we propose to use a positional embedding for each subgraph, which is implemented as the maximum Random Walk Structural Embedding (RWSE) of all the nodes in that subgraph. In this way, the position is characterized consistently for each patch. Formally, a RWSE (Dwivedi et al., 2021) for a node v can be defined as:

$$P_v = (M_{ii}, M_{ii}^2, \ldots, M_{ii}^k) \tag{1}$$

with $P_v \in \mathbb{R}^k$, $M^k = (D^{-1}A)^k$ the random-walk transition matrix of order k, and i is the index of node v in the adjacency matrix. Therefore, M_{ii}^k encodes the probability of node v landing to itself after a k-step random walk. Given a subgraph l, let V_l denote the set of nodes in l. We define the subgraph RWSE as:

$$P_l = \max_{v \in V_l} P_v \tag{2}$$

[1]Connecting all (not already present) adjacent nodes from the input graph with each node present in the subgraph.

where the max operation is performed elementwise. A straightforward explanation of the above definition is that the positional information of each subgraph is essentially contained in the node with the highest degree[2], which will act as an anchor reference when predicting the target subgraphs' latent representations. Intuitively, knowing P_l is useful for the prediction task because the features present in the most representative node will have been diffused the most (via the GNN) into the subgraph.

3.3 Context and Target Encoding

Given the subgraph representations and their respective positional embeddings, we frame the Graph-JEPA prediction task in a similar manner to I-JEPA (Assran et al., 2023). The goal of the network is to predict the latent embeddings of randomly chosen target subgraphs, given one random context subgraph. The prediction is conditioned on positional information regarding each subgraph. At each training step, we choose one random subgraph as the context x and m others as targets $Y = \{y_1, \ldots, y_m\}$ (Fig. 2d). These subgraphs are processed by the context and target encoders (Fig. 2e) which are parametrized by Transformer encoder blocks (without self-attention for the context) where normalization is applied at first (Xiong et al., 2020). The target encoder uses Hadamard self-attention (He et al., 2023), but other choices, such as the standard self-attention mechanism (Vaswani et al., 2017) are perfectly viable. We can summarize this step as:

$$z^x = E_c(x),\ Z^y = E_t(Y), \tag{3}$$

with $z^x \in \mathbb{R}^d$ and $Z^y \in \mathbb{R}^{m \times d}$. At this stage, we can use the predictor network to directly predict Z^y from z^x. This is the typical formulation of JEPAs, also followed by the popular work of Assran et al. (2023). We argue that learning how to organize concepts for abstract objects such as graphs or networks directly in Euclidean space is suboptimal. In the following subsection, we propose a simple trick to bypass this problem using the encoding and prediction mechanisms in Graph-JEPA. A discussion in Section 4.3 will provide additional insights regarding this topic.

3.4 Latent Target Prediction

Learning hierarchically consistent concepts (Deco et al., 2021) is considered a crucial aspect of human learning, especially during infancy and young age (Rosenberg & Feigenson, 2013). Networks in the real world often conform to some concept of hierarchy (Moutsinas et al., 2021), and this assumption is frequently used when learning graph-level representations (Ying et al., 2018). Thus, we conjecture that Graph-JEPA should operate in a hyperbolic space, where learned embeddings implicitly organize hierarchical concepts(Nickel & Kiela, 2017; Zhao et al., 2023). This gives rise to another issue: commonly used hyperbolic (Poincaré) embeddings are known to have several tradeoffs between dimensionality and performance(Sala et al., 2018; Guo et al., 2022), which severely limits the expressive ability of the model. Given that graphs can describe very abstract concepts, high expressivity in terms of model parameters is preferred. In simple words, we would ideally like to have a high-dimensional latent code that has a concept of hyperbolicity built into it.

To achieve this, we think of the target embedding as a high-dimensional representation of the hyperbolic angle, which allows us to describe each target patch through its position in the 2D unit hyperbola. Formally, given a target patch l, its embedding Z_l^y and positional encoding P_l, we express the latent target as:

$$\psi_l^y = \begin{pmatrix} cosh(\alpha_l^y) \\ \\ sinh(\alpha_l^y) \end{pmatrix},\ \alpha_l^y = \frac{1}{N}\sum_{n=1}^{d} Z_l^{y(n)}, \tag{4}$$

where $cosh(\cdot)$ and $sinh(\cdot)$ are the hyperbolic cosine and sine functions. The predictor module is then tasked with directly locating the target in the unit hyperbola, given the context embedding and the target patch's positional encoding:

$$\hat{\psi}_l^y = W_2(\sigma(W_1(z^x + P_l) + b_1)) + b_2, \tag{5}$$

where W_n and b_n represent the n-th weight matrix and bias vector (i.e., n-th fully connected layer), σ is an elementwise non-linear activation function, and $\hat{\psi}_l^y \in \mathbb{R}^2$. This allows us to frame the learning procedure as

[2]A more suitable term would be the in-degree, but there is no difference in the undirected case.

a regression problem, and the whole network can be trained end-to-end (Fig. 2f). In practice, we use the smooth L1 loss as the distance function, as it is less sensitive to outliers compared to the typical L2 loss (Girshick, 2015):

$$L(y, \hat{y}) = \frac{1}{N}\sum_{n=1}^{N} s_n, \quad s_n = \begin{cases} 0.5(y_n - \hat{y}_n)^2/\beta, & \text{if } |y - \hat{y}| < \beta \\ |y - \hat{y}| - 0.5\beta, & \text{otherwise} \end{cases} \tag{6}$$

Thus, we are effectively measuring how far away the context and target patches are in the unit hyperbola of the plane, but the targets are actually described through a high dimensional latent code (Eq. 4). We explicitly show the differences between this choice and using the Euclidean or Hyperbolic distances as energy functions (in the latent space) in Section 4.3. Our proposed pretraining objective forces the context encoder to understand the differences in the hyperbolic angle between the target patches, which can be thought of as establishing an implicit hierarchy between them.

Preventing representation collapse. JEPAs are based on a self-distillation procedure. Therefore, they are by definition susceptible to representation collapse (Assran et al., 2023). This is due to the nature of the learning process, where both the context and target representations have to be learned. We formalize this intuition with an example and argue why there is a need to adopt two well-known training tricks that are prevalent in the literature to prevent representation collapse: i) The stop-gradient operation on the target encoder followed by a momentum update (using an Exponential Moving Average (EMA) of the context encoder weights) (Grill et al., 2020; Chen & He, 2021); ii) a simpler parametrization of the predictor compared to the context and target networks (in terms of parameters)(Chen et al., 2020; Baevski et al., 2022);

Let us simplify the problem through the following assumptions: i) The predictor network is linear; ii) There is a one-to-one correspondence between context and target patches. (This holds also in practice due to Eq. 5); iii) The self-predictive task is a least-squares problem in a finite-dimensional vector space. Based on these assumptions, we can rewrite the context features as $X \in \mathbb{R}^{n \times d}$, the target coordinates as $Y \in \mathbb{R}^{n \times 2}$, and the weights of the linear model as $W \in \mathbb{R}^{d \times 2}$. The optimal weights of the predictor are given by solving:

$$\arg\min_{W} \|XW - Y\|^2 \tag{7}$$

where $\|.\|$ indicates the Frobenius norm. The (multivariate) OLS estimator can give the solution to this problem by setting W to:

$$W = (X^T X)^{-1} X^T Y \tag{8}$$

Plugging Eq. 8 into Eq. 7 and factorizing Y, the least squares solution leads to the error:

$$\left\|(X(X^T X)^{-1} X^T - I_n)Y\right\|^2 \tag{9}$$

Thus, the optimality of a linear predictor is defined by the orthogonal projection of Y onto the orthogonal complement of a subspace of $Col(X)$. As is commonly understood, this translates to finding the linear combination of X that is closest, in terms of $\|\cdot\|^2$, to Y. Similarly to what was shown by Richemond et al. (2023), we argue that this behavior unveils a key intuition: The target encoder, *which estimates* Y must not share weights or be optimized via the same optimizer as the context encoder. If that were the case, the easiest solution to Eq. 9 would be learning a representation that is orthogonal to itself, i.e., the $\mathbf{0}$ vector, leading to representation collapse. Using a well-parametrized EMA update is what allows us to bypass this problem. In practice, even with the slower dynamics induced by the EMA procedure, it is possible to immediately encounter a degenerate solution with a non-linear and highly expressive network. For instance, consider a scenario where the target subgraphs are straightforward and similar. In this case, if the predictor network is sufficiently powerful, it can predict the target representations even without a well-learned context representation. Since the target encoder weights are updated via the EMA procedure, the learned representations will tend to be uninformative. Therefore, implementing the predictor network as a simpler and less expressive network is crucial to achieving the desired training dynamics.

Table 1: Values of Graph-JEPA specific hyperparameters for the experiments on the TUD datasets.

Hyperparameter	PROTEINS	MUTAG	DD	REDDIT-B	REDDIT-M5	IMDB-B	IMDB-M	ZINC
# Subgraphs	32	32	32	128	128	32	32	32
# GNN Layers	2	2	3	2	2	2	2	2
# Encoder Blocks	4	4	4	4	4	4	4	4
Embedding size	512	512	512	512	512	512	512	512
RWSE size	20	15	30	40	40	15	15	20
# context - # target	1 - 2	1 - 3	1 - 4	1 - 4	1 - 4	1- 4	1- 4	1- 4

4 Experiments

The experimental section introduces the empirical evaluation of the Graph-JEPA model in terms of downstream performance on different graph datasets and tasks, along with additional studies on the latent space's structure and the encoders' parametrization. Furthermore, a series of ablation studies are presented in order to elucidate the design choices behind Graph-JEPA.

4.1 Experimental setting

We use the TUD datasets (Morris et al., 2020) as commonly done for graph-level SSL (Suresh et al., 2021; Tan et al., 2023). We utilize seven different graph-classification datasets: PROTEINS, MUTAG, DD, REDDIT-BINARY, REDDIT-MULTI-5K, IMDB-BINARY, and IMDB-MULTI. We report the accuracy of ten-fold cross-validation for all classification experiments over five runs (with different seeds). It is worth noting that we retrain the Graph-JEPA model for each fold without ever having access to the testing partition in both the pretraining and fine-tuning stages. We use the ZINC dataset for graph regression and report the Mean Squared Error (MSE) over ten runs (with different seeds), given that the testing partition is already separated. To produce the unique graph-level representations, we feed all the subgraphs through the trained target encoder and then use mean pooling, obtaining a single feature vector $z_G \in \mathbb{R}^d$ that represents the whole graph. This high-dimensional is then used to fit a *linear model* with L2 regularization for the downstream task. Specifically, we employ Logistic Regression with L2 regularization on the classification datasets and Ridge Regression for the ZINC dataset. For the datasets that do not natively have node and edge features, we use a simple constant (0) initialization. The subgraph embedding GNN (Figure 2c.) consists of the GIN operator with support for edge features Hu et al. (2019), often referred to as GINE. The neural network modules were trained using the Adam optimizer Kingma & Ba (2014) and implemented using PyTorch Paszke et al. (2019) and PyTorch-Geometric Fey & Lenssen (2019), while the linear classifiers and cross-validation procedure were implemented through the Scikit-Learn library Pedregosa et al. (2011). All experiments were performed on Nvidia RTX 3090 GPUs. Finally, 1 shows the JEPA-specific hyperparameters used for the following experiments.

4.2 Downstream performance

For the experiments on downstream performance, we follow Suresh et al. (2021) and also report the results of a fully supervised Graph Isomorphism Network (GIN) (Xu et al., 2018), denoted F-GIN in Table 2. We compare Graph-JEPA against four contrastive methods, two generative methods, and one latent self-predictive method (Xie et al., 2022a) (which also regularizes through instance-level reconstruction). As can be seen in Table 2, Graph-JEPA achieves competitive results on all datasets, setting the state-of-the-art as a pretrained backbone on five different datasets and coming second on one (out of eight total). Overall, our proposed framework learns semantic embeddings that work well on different graphs, showing that Graph-JEPA can be utilized as a general pretraining method for graph-level SSL. Notably, Graph-JEPA works well for both classification and regression and performs better than a supervised GIN on all classification datasets. We also provide results with BGRL (Thakoor et al., 2021), a node-level latent self-predictive strategy. We train this model using the official code and hyperparameters and then mean-pool the node representations for the downstream task. The results are underwhelming compared to the models reporting graph-level performance, which is to be expected considering that methods that also perform well on graph-level learning are appropriately designed.

Table 2: Performance of different graph SSL techniques on various TUD benchmark datasets, ordered by pretraining type: contrastive, generative, and self-predictive. F-GIN is an end-to-end supervised GIN and serves as a reference for the performance values. The results of the competitors are taken as the best values from (Hassani & Khasahmadi, 2020; Suresh et al., 2021; Tan et al., 2023). "-" indicates missing values from the literature. The **best results** are reported in boldface, and the second best are underlined. For the sake of completeness, we also report the training and evaluation results of GraphMAE on the DD, REDDIT-M5, and ZINC datasets in *italics*, along with the results of a node-level self-predictive method (BGRL), which does not originally report results on graph-level tasks.

Model	PROTEINS ↑	MUTAG ↑	DD ↑	REDDIT-B ↑	REDDIT-M5 ↑	IMDB-B ↑	IMDB-M ↑	ZINC ↓
F-GIN	72.39 ± 2.76	90.41 ± 4.61	74.87 ± 3.56	86.79 ± 2.04	53.28 ± 3.17	71.83 ± 1.93	48.46 ± 2.31	0.254 ± 0.005
InfoGraph (Sun et al., 2019)	72.57 ± 0.65	87.71 ± 1.77	75.23 ± 0.39	78.79 ± 2.14	51.11 ± 0.55	71.11 ± 0.88	48.66 ± 0.67	0.890 ± 0.017
GraphCL (You et al., 2020)	72.86 ± 1.01	88.29 ± 1.31	74.70 ± 0.70	82.63 ± 0.99	53.05 ± 0.40	70.80 ± 0.77	48.49 ± 0.63	0.627 ± 0.013
MVGRL (Hassani & Khasahmadi, 2020)	-	-	-	84.5 ± 0.6	-	74.2 ± 0.7	51.2 ± 0.5	-
AD-GCL-FIX (Suresh et al., 2021)	73.59 ± 0.65	89.25 ± 1.45	74.49 ± 0.52	85.52 ± 0.79	53.00 ± 0.82	71.57 ± 1.01	49.04 ± 0.53	0.578 ± 0.012
AD-GCL-OPT (Suresh et al., 2021)	73.81 ± 0.46	89.70 ± 1.03	75.10 ± 0.39	85.52 ± 0.79	54.93 ± 0.43	72.33 ± 0.56	49.89 ± 0.66	0.544 ± 0.004
GraphMAE (Hou et al., 2022)	75.30 ± 0.39	88.19 ± 1.26	*74.27 ± 1.07*	88.01 ± 0.19	*46.06 ± 3.44*	75.52 ± 0.66	51.63 ± 0.52	*0.935 ± 0.034*
S2GAE (Tan et al., 2023)	**76.37 ± 0.43**	88.26 ± 0.76	-	87.83 ± 0.27	-	**75.76 ± 0.62**	**51.79 ± 0.36**	-
BGRL (Thakoor et al., 2021)	70.99 ± 3.86	74.99 ± 8.83	71.52 ± 2.97	50 ± 0	20 ± 0.1	0.5 ± 0	0.33 ± 0	1.2 ± 0.011
LaGraph (Xie et al., 2022a)	75.2 ± 0.4	90.2 ± 1.1	78.1 ± 0.4	90.4 ± 0.8	56.4 ± 0.4	73.7 ± 0.9	-	-
Graph-JEPA	75.67 ± 3.78	**91.25 ± 5.75**	**78.64 ± 2.35**	**91.99 ± 1.59**	**56.73 ± 1.96**	73.68 ± 3.24	50.69 ± 2.91	**0.434 ± 0.014**

Table 3: Classification accuracy on the synthetic EXP dataset (Abboud et al., 2020), which contains 600 pairs of non-isomorphic graphs that are indistinguishable by the 1-WL test. Note that the competitor models are all trained with *end-to-end supervision*. The **best result** is reported in boldface, and the second best is underlined. Performances for all competitor models are taken from (He et al., 2023).

Model	Accuracy ↑
GCN (Kipf & Welling, 2016a)	51.90 ± 1.96
GatedGCN (Bresson & Laurent, 2017)	51.73 ± 1.65
GINE (Xu et al., 2018)	50.69 ± 1.39
GraphTransformer (Dwivedi & Bresson, 2020)	52.35 ± 2.32
Graph-MLP-Mixer (He et al., 2023)	**100.00 ± 0.00**
Graph-JEPA	98.77 ± 0.99

We further explore the performance of our model on the synthetic EXP dataset (Abboud et al., 2020), compared to end-to-end supervised models. This experiment aims to empirically verify if Graph-JEPA can learn highly expressive graph representations (in terms of the commonly used WL hierarchy (Morris et al., 2019)) without relying on supervision. The results in Table 3 show that our model is able to perform much better than commonly used GNNs. Given its local and global exchange of information, this result is to be expected. Most importantly, Graph-JEPA almost matches the flawless performance achieved by He et al. (2023), who train fully supervised.

4.3 Exploring the Graph-JEPA latent space

As discussed in Section 3.4, the choice of energy function has a big impact on the learned representations. Given the latent prediction task of Graph-JEPA, we expect the latent representations to display hyperbolicity. The predictor network is linearly approximating the behavior of the unit hyperbola such that it best matches the generated target coordinates (Eq. 6). Thus, the network is actually trying to estimate a space that can be considered a particular section of the hyperboloid model (Reynolds, 1993), where hyperbolas appear as geodesics. We are, therefore, evaluating our energy in a restricted part of hyperbolic space. As mentioned before, we find this task to offer great flexibility as it is straightforward to implement and it is computationally efficient compared to the hyperbolic distance used to typically learn hyperbolic embeddings in the Poincaré ball model (Nickel & Kiela, 2017). Table 4 provides empirical evidence for our conjectures regarding the suboptimality of Euclidean or Poincaré embeddings on 4 out of the 8 datasets initially presented in Table 2, where we make sure to choose different graph types for a fair comparison. The results reveal that learning the distance between patches in the 2D unit hyperbola provides a simple way to get the advantages of both embedding types. Hyperbolic embeddings must be learned in lower dimensions due to stability issues (Yu

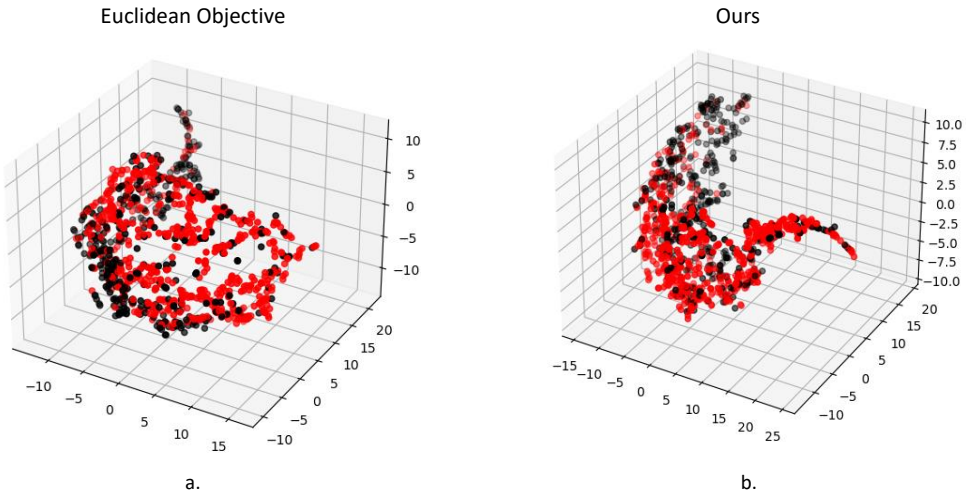

Figure 3: 3D t-SNE(Van der Maaten & Hinton, 2008) of the latent representations used to train the linear classifier on the DD dataset. The change in the curvature of the embedding using the Graph-JEPA objective (b.) is noticeable. Best viewed in color.

Table 4: Comparison of Graph-JEPA performance for different distance functions. The optimization for Poincaré embeddings in higher dimensions is problematic, as shown by the *NaN* loss on the IMDB-B dataset. LD stands for Lower Dimension, where we use a smaller embedding size.

Distance function	Ours	Euclidean	Hyperbolic	Euclidean (LD)	Hyperbolic (LD)
MUTAG	**91.25 ± 5.75**	87.04 ± 6.01	89.43 +- 5.67	86.63 ± 5.9	86.32 ± 5.52
REDDIT-M	**56.73 ± 1.96**	56.55 ± 1.94	56.19 +- 1.95	54.84 ± 1.6	55.07 ± 1.83
IMDB-B	73.68 ± 3.24	**73.76 ± 3.46**	*NaN*	72.5 ± 3.97	73.4 ± 4.07
ZINC	**0.434 ± 0.01**	0.471 ± 0.01	0.605 +- 0.01	0.952 ± 0.05	0.912 ± 0.04

& De Sa, 2021), while Euclidean ones do not properly reflect the dependencies between subgraphs and the hierarchical nature of graph-level concepts. Our results suggest that the hyperbolic (Poincaré) distance is generally a better choice than the Euclidean distance in lower dimensions, but it is computationally unstable and expensive in high dimensions. The proposed approach provides the best overall results. We provide a qualitative example of how the embedding space is altered from our latent prediction objective in Fig. 3.

Table 5: Total training time and model parameters of MVGRL, GraphMAE, and Graph-JEPA for pretraining (single run) based on the optimal configuration for downstream performance. OOM stands for Out-Of-Memory.

Dataset	Model	Num. parameters	Training time
IMDB	MVGRL	3674118	$\sim$ 7 min
	GraphMAE	2257193	$\sim$ 1.5 min (1min 36sec)
	Graph-JEPA	**19219460**	**< 1min (56 sec)**
REDDIT-M5	MVGRL	4198406	*OOM*
	GraphMAE	2784555	$\sim$ 46 min
	Graph-JEPA	**19245060**	**$\sim$ 18 min**

Table 6: Performance when parametrizing the context and target encoders through MLPs vs using the proposed Transformer encoders.

Dataset	Transformer Encoders	MLP Encoders
MUTAG	**91.25 ± 5.75**	90.5 ± 5.99
REDDIT-M5	**56.73 ± 1.96**	56.21 ± 2.29
IMDB-B	73.68 ± 3.24	**74.26 ± 3.56**
ZINC	**0.434 ± 0.01**	0.472 ± 0.01

4.4 Additional insights and ablation studies

Model efficiency. In an attempt to characterize the efficiency of our proposed model, we perform a simple experimental check. In Table 5, we compare the total training time needed for different Graph-SSL strategies to provide a representation that performs optimally on the downstream task. We show results on the datasets with the largest graphs from Table 2: IMDB and REDDIT-M5. While the runtime is hardware-dependent, all experiments are performed on the same machine. Graph-JEPA displays superior efficiency and promising scaling behavior. The presented runtime is naturally dependent on the self-supervised scheme used in each model, so we do not regard it as a definitive descriptor, but rather an indicator of the potential of fully latent self-predictive models.

MLP parametrization. Table 6 contains the results of parametrizing the whole architecture, other than the initial GNN encoder, through MLPs. This translates to not using the Attention mechanism at all. For this experiment, and also the following ablations, we consider 4 out of the 8 datasets initially presented in Table 2, making sure to choose different graph domains for a fair comparison. Graph-JEPA still manages to perform well, showing the flexibility of our architecture, even though using the complete Transformer encoders leads to better overall performance and less variance in the predictions.

Positional embedding. Following He et al. (2023), it is possible to use the RWSE of the patches as conditioning information. Formally, let $B \in \{0,1\}^{p \times N}$ be the patch assignment matrix, such that $B_{ij} = 1$ if $v_j \in p_i$. We can calculate a coarse patch adjacency matrix $A' = BB^T \in \mathbb{R}^{p \times p}$, where each A'_{ij} contains the node overlap between p_i and p_j. The positional embedding can then be calculated for each patch by simply using the RWSE described in Eq. 1 on A'. We test Graph-JEPA with these relative positional embeddings and find that they still provide good performance but consistently fall behind the node-level (global) RWSE that we employ in our formulation (Table 7b). An issue of these relative patch RWSEs is that the number of shared neighbors can obscure the local peculiarities of each patch, rendering the context given to the predictor more ambiguous.

Random subgraphs. A natural question that arises in our framework is how to design the spatial partitioning procedure. Using a structured approach like METIS Karypis & Kumar (1998) is intuitive and leads to favorable results. Another option would be to extract random, non-empty subgraphs as context and targets. As seen in Table 7a, the random patches also provide strong performance, showing that the proposed JEPA architecture is not reliant on the initial input, as is the case for many methods that rely on data augmentation for view generation (Lee et al., 2022). Even though our results show that using a structured way to extract the patches might not be necessary, random sampling can be problematic for larger graphs. Thus, we advocate extracting subgraphs with METIS as it is a safer option in terms of generalizability across different graphs and the inductive bias it provides.

5 Conclusion

In this work, we introduce a new Joint Embedding Predictive Architecture (JEPA) (LeCun, 2022), for graph-level Self-Supervised Learning (SSL). An appropriate design of the model, both in terms of data preparation and pretraining objective, reveals that it is possible for a neural network to self-organize the semantic knowledge embedded in a graph, demonstrating competitive performance in different graph data and tasks. Future

Table 7: (a) Performance when using node-level vs patch-level RWSEs. (b) Performance when extracting subgraphs with METIS vs. using random subgraphs.

(a)

Dataset	METIS	Random
MUTAG	91.25 ± 5.75	**91.58 ± 5.82**
REDDIT-M5	**56.73 ± 1.96**	56.08 ± 1.69
IMDB-B	**73.68 ± 3.24**	73.52 ± 3.08
ZINC	0.434 ± 0.01	**0.43 ± 0.01**

(b)

Dataset	Node RWSE	Patch RWSE
MUTAG	**91.25 ± 5.75**	91.23 ± 5.86
REDDIT-M5	**56.73 ± 1.96**	56.01 ± 2.1
IMDB-B	**73.68 ± 3.24**	73.58 ± 4.47
ZINC	**0.434 ± 0.01**	0.505 ± 0.005

research directions include extending the proposed method to nodes and edge-level learning, theoretically exploring the expressiveness of Graph-JEPA, and gaining more insights into the optimal geometry of the embedding space for graph SSL.

References

Ralph Abboud, Ismail Ilkan Ceylan, Martin Grohe, and Thomas Lukasiewicz. The surprising power of graph neural networks with random node initialization. *arXiv preprint arXiv:2010.01179*, 2020.

Sudarshan Adiga, Mohamed Adel Attia, Wei-Ting Chang, and Ravi Tandon. On the tradeoff between mode collapse and sample quality in generative adversarial networks. In *2018 IEEE global conference on signal and information processing (GlobalSIP)*, pp. 1184–1188. IEEE, 2018.

Mahmoud Assran, Quentin Duval, Ishan Misra, Piotr Bojanowski, Pascal Vincent, Michael Rabbat, Yann LeCun, and Nicolas Ballas. Self-supervised learning from images with a joint-embedding predictive architecture. In *Proceedings of the IEEE/CVF Conference on Computer Vision and Pattern Recognition*, pp. 15619–15629, 2023.

Alexei Baevski, Wei-Ning Hsu, Qiantong Xu, Arun Babu, Jiatao Gu, and Michael Auli. Data2vec: A general framework for self-supervised learning in speech, vision and language. In *International Conference on Machine Learning*, pp. 1298–1312. PMLR, 2022.

Adrien Bardes, Quentin Garrido, Jean Ponce, Xinlei Chen, Michael Rabbat, Yann LeCun, Mido Assran, and Nicolas Ballas. V-jepa: Latent video prediction for visual representation learning. 2023a.

Adrien Bardes, Jean Ponce, and Yann LeCun. Mc-jepa: A joint-embedding predictive architecture for self-supervised learning of motion and content features. *arXiv preprint arXiv:2307.12698*, 2023b.

Xavier Bresson and Thomas Laurent. Residual gated graph convnets. *arXiv preprint arXiv:1711.07553*, 2017.

Jane Bromley, Isabelle Guyon, Yann LeCun, Eduard Säckinger, and Roopak Shah. Signature verification using a" siamese" time delay neural network. *Advances in neural information processing systems*, 6, 1993.

Tom Brown, Benjamin Mann, Nick Ryder, Melanie Subbiah, Jared D Kaplan, Prafulla Dhariwal, Arvind Neelakantan, Pranav Shyam, Girish Sastry, Amanda Askell, et al. Language models are few-shot learners. *Advances in neural information processing systems*, 33:1877–1901, 2020.

Ting Chen, Simon Kornblith, Mohammad Norouzi, and Geoffrey Hinton. A simple framework for contrastive learning of visual representations. In *International conference on machine learning*, pp. 1597–1607. PMLR, 2020.

Xinlei Chen and Kaiming He. Exploring simple siamese representation learning. In *Proceedings of the IEEE/CVF conference on computer vision and pattern recognition*, pp. 15750–15758, 2021.

G. Deco, D. Vidaurre, and M. Kringelbach. Revisiting the global workspace orchestrating the hierarchical organization of the human brain. *Nature Human Behaviour*, 5:497 – 511, 2021. doi: 10.1038/s41562-020-01003-6.

Alexey Dosovitskiy, Lucas Beyer, Alexander Kolesnikov, Dirk Weissenborn, Xiaohua Zhai, Thomas Unterthiner, Mostafa Dehghani, Matthias Minderer, Georg Heigold, Sylvain Gelly, et al. An image is worth 16x16 words: Transformers for image recognition at scale. *arXiv preprint arXiv:2010.11929*, 2020.

Vijay Prakash Dwivedi and Xavier Bresson. A generalization of transformer networks to graphs. *arXiv preprint arXiv:2012.09699*, 2020.

Vijay Prakash Dwivedi, Anh Tuan Luu, Thomas Laurent, Yoshua Bengio, and Xavier Bresson. Graph neural networks with learnable structural and positional representations. *arXiv preprint arXiv:2110.07875*, 2021.

Zhengcong Fei, Mingyuan Fan, and Junshi Huang. A-jepa: Joint-embedding predictive architecture can listen. *arXiv preprint arXiv:2311.15830*, 2023.

Matthias Fey and Jan E. Lenssen. Fast graph representation learning with PyTorch Geometric. In *ICLR Workshop on Representation Learning on Graphs and Manifolds*, 2019.

Justin Gilmer, Samuel S Schoenholz, Patrick F Riley, Oriol Vinyals, and George E Dahl. Neural message passing for quantum chemistry. In *International conference on machine learning*, pp. 1263–1272. PMLR, 2017.

Ross Girshick. Fast r-cnn. In *Proceedings of the IEEE international conference on computer vision*, pp. 1440–1448, 2015.

Jean-Bastien Grill, Florian Strub, Florent Altché, Corentin Tallec, Pierre Richemond, Elena Buchatskaya, Carl Doersch, Bernardo Avila Pires, Zhaohan Guo, Mohammad Gheshlaghi Azar, et al. Bootstrap your own latent-a new approach to self-supervised learning. *Advances in neural information processing systems*, 33:21271–21284, 2020.

Yunhui Guo, Haoran Guo, and Stella X Yu. Co-sne: Dimensionality reduction and visualization for hyperbolic data. In *Proceedings of the IEEE/CVF Conference on Computer Vision and Pattern Recognition*, pp. 21–30, 2022.

Michael Gutmann and Aapo Hyvärinen. Noise-contrastive estimation: A new estimation principle for unnormalized statistical models. In *Proceedings of the thirteenth international conference on artificial intelligence and statistics*, pp. 297–304. JMLR Workshop and Conference Proceedings, 2010.

Kaveh Hassani and Amir Hosein Khasahmadi. Contrastive multi-view representation learning on graphs. In *International conference on machine learning*, pp. 4116–4126. PMLR, 2020.

Kaiming He, Xinlei Chen, Saining Xie, Yanghao Li, Piotr Dollár, and Ross Girshick. Masked autoencoders are scalable vision learners. In *Proceedings of the IEEE/CVF conference on computer vision and pattern recognition*, pp. 16000–16009, 2022.

Xiaoxin He, Bryan Hooi, Thomas Laurent, Adam Perold, Yann LeCun, and Xavier Bresson. A generalization of vit/mlp-mixer to graphs. In *International Conference on Machine Learning*, pp. 12724–12745. PMLR, 2023.

Geoffrey E Hinton. Training products of experts by minimizing contrastive divergence. *Neural computation*, 14(8):1771–1800, 2002.

Geoffrey E Hinton and Richard Zemel. Autoencoders, minimum description length and helmholtz free energy. *Advances in neural information processing systems*, 6, 1993.

Zhenyu Hou, Xiao Liu, Yukuo Cen, Yuxiao Dong, Hongxia Yang, Chunjie Wang, and Jie Tang. Graphmae: Self-supervised masked graph autoencoders. In *Proceedings of the 28th ACM SIGKDD Conference on Knowledge Discovery and Data Mining*, pp. 594–604, 2022.

Weihua Hu, Bowen Liu, Joseph Gomes, Marinka Zitnik, Percy Liang, Vijay Pande, and Jure Leskovec. Strategies for pre-training graph neural networks. In *International Conference on Learning Representations*, 2019.

Ziniu Hu, Yuxiao Dong, Kuansan Wang, Kai-Wei Chang, and Yizhou Sun. Gpt-gnn: Generative pre-training of graph neural networks. In *Proceedings of the 26th ACM SIGKDD International Conference on Knowledge Discovery & Data Mining*, pp. 1857–1867, 2020.

Wei Jin, Tyler Derr, Haochen Liu, Yiqi Wang, Suhang Wang, Zitao Liu, and Jiliang Tang. Self-supervised learning on graphs: Deep insights and new direction. *arXiv preprint arXiv:2006.10141*, 2020.

Wei Jin, Xiaorui Liu, Xiangyu Zhao, Yao Ma, Neil Shah, and Jiliang Tang. Automated self-supervised learning for graphs. In *International Conference on Learning Representations*, 2021.

George Karypis and Vipin Kumar. A fast and high quality multilevel scheme for partitioning irregular graphs. *SIAM Journal on scientific Computing*, 20(1):359–392, 1998.

Diederik P Kingma and Jimmy Ba. Adam: A method for stochastic optimization. *arXiv preprint arXiv:1412.6980*, 2014.

Diederik P Kingma and Max Welling. Auto-encoding variational bayes. *arXiv preprint arXiv:1312.6114*, 2013.

Thomas N Kipf and Max Welling. Semi-supervised classification with graph convolutional networks. *arXiv preprint arXiv:1609.02907*, 2016a.

Thomas N Kipf and Max Welling. Variational graph auto-encoders. *arXiv preprint arXiv:1611.07308*, 2016b.

Yann LeCun. A path towards autonomous machine intelligence version 0.9. 2, 2022-06-27. *Open Review*, 62, 2022.

Namkyeong Lee, Junseok Lee, and Chanyoung Park. Augmentation-free self-supervised learning on graphs. In *Proceedings of the AAAI conference on artificial intelligence*, volume 36, pp. 7372–7380, 2022.

Xiao Liu, Fanjin Zhang, Zhenyu Hou, Li Mian, Zhaoyu Wang, Jing Zhang, and Jie Tang. Self-supervised learning: Generative or contrastive. *IEEE Transactions on Knowledge and Data Engineering*, 35(1): 857–876, 2023. doi: 10.1109/TKDE.2021.3090866.

Gabriel Loaiza-Ganem, Brendan Leigh Ross, Jesse C Cresswell, and Anthony L Caterini. Diagnosing and fixing manifold overfitting in deep generative models. *Transactions on Machine Learning Research*, 2022.

Yao Ma and Jiliang Tang. *Deep Learning on Graphs*. Cambridge University Press, 2021. doi: 10.1017/9781108924184.

Qinxue Meng, Daniel Catchpoole, David Skillicom, and Paul J. Kennedy. Relational autoencoder for feature extraction. In *2017 International Joint Conference on Neural Networks (IJCNN)*, pp. 364–371, 2017. doi: 10.1109/IJCNN.2017.7965877.

Christopher Morris, Martin Ritzert, Matthias Fey, William L Hamilton, Jan Eric Lenssen, Gaurav Rattan, and Martin Grohe. Weisfeiler and leman go neural: Higher-order graph neural networks. In *Proceedings of the AAAI conference on artificial intelligence*, volume 33, pp. 4602–4609, 2019.

Christopher Morris, Nils M. Kriege, Franka Bause, Kristian Kersting, Petra Mutzel, and Marion Neumann. Tudataset: A collection of benchmark datasets for learning with graphs. In *ICML 2020 Workshop on Graph Representation Learning and Beyond (GRL+ 2020)*, 2020.

Giannis Moutsinas, Choudhry Shuaib, Weisi Guo, and Stephen Jarvis. Graph hierarchy: a novel framework to analyse hierarchical structures in complex networks. *Scientific Reports*, 11(1):13943, 2021.

Maximillian Nickel and Douwe Kiela. Poincaré embeddings for learning hierarchical representations. *Advances in neural information processing systems*, 30, 2017.

Adam Paszke, Sam Gross, Francisco Massa, Adam Lerer, James Bradbury, Gregory Chanan, Trevor Killeen, Zeming Lin, Natalia Gimelshein, Luca Antiga, et al. Pytorch: An imperative style, high-performance deep learning library. *Advances in neural information processing systems*, 32, 2019.

F. Pedregosa, G. Varoquaux, A. Gramfort, V. Michel, B. Thirion, O. Grisel, M. Blondel, P. Prettenhofer, R. Weiss, V. Dubourg, J. Vanderplas, A. Passos, D. Cournapeau, M. Brucher, M. Perrot, and E. Duchesnay. Scikit-learn: Machine learning in Python. *Journal of Machine Learning Research*, 12:2825–2830, 2011.

William F. Reynolds. Hyperbolic geometry on a hyperboloid. *The American Mathematical Monthly*, 100(5): 442–455, 1993. ISSN 00029890, 19300972.

Pierre Harvey Richemond, Allison Tam, Yunhao Tang, Florian Strub, Bilal Piot, and Felix Hill. The edge of orthogonality: A simple view of what makes byol tick. In *International Conference on Machine Learning*, pp. 29063–29081. PMLR, 2023.

R. Rosenberg and L. Feigenson. Infants hierarchically organize memory representations. *Developmental science*, 16 4:610–21, 2013. doi: 10.1111/desc.12055.

Frederic Sala, Chris De Sa, Albert Gu, and Christopher Re. Representation tradeoffs for hyperbolic embeddings. In Jennifer Dy and Andreas Krause (eds.), *Proceedings of the 35th International Conference on Machine Learning*, volume 80 of *Proceedings of Machine Learning Research*, pp. 4460–4469. PMLR, 10–15 Jul 2018.

Franco Scarselli, Marco Gori, Ah Chung Tsoi, Markus Hagenbuchner, and Gabriele Monfardini. The graph neural network model. *IEEE transactions on neural networks*, 20(1):61–80, 2008.

Fan-Yun Sun, Jordan Hoffman, Vikas Verma, and Jian Tang. Infograph: Unsupervised and semi-supervised graph-level representation learning via mutual information maximization. In *International Conference on Learning Representations*, 2019.

Susheel Suresh, Pan Li, Cong Hao, and Jennifer Neville. Adversarial graph augmentation to improve graph contrastive learning. *Advances in Neural Information Processing Systems*, 34:15920–15933, 2021.

Qiaoyu Tan, Ninghao Liu, Xiao Huang, Soo-Hyun Choi, Li Li, Rui Chen, and Xia Hu. S2gae: Self-supervised graph autoencoders are generalizable learners with graph masking. In *Proceedings of the Sixteenth ACM International Conference on Web Search and Data Mining*, pp. 787–795, 2023.

Shantanu Thakoor, Corentin Tallec, Mohammad Gheshlaghi Azar, Mehdi Azabou, Eva L Dyer, Remi Munos, Petar Veličković, and Michal Valko. Large-scale representation learning on graphs via bootstrapping. In *International Conference on Learning Representations*, 2021.

Yonglong Tian, Chen Sun, Ben Poole, Dilip Krishnan, Cordelia Schmid, and Phillip Isola. What makes for good views for contrastive learning? *Advances in neural information processing systems*, 33:6827–6839, 2020.

Gerrit van den Burg and Chris Williams. On memorization in probabilistic deep generative models. *Advances in Neural Information Processing Systems*, 34:27916–27928, 2021.

Laurens Van der Maaten and Geoffrey Hinton. Visualizing data using t-sne. *Journal of machine learning research*, 9(11), 2008.

Ashish Vaswani, Noam Shazeer, Niki Parmar, Jakob Uszkoreit, Llion Jones, Aidan N Gomez, Łukasz Kaiser, and Illia Polosukhin. Attention is all you need. *Advances in neural information processing systems*, 30, 2017.

Petar Veličković. Everything is connected: Graph neural networks. *Current Opinion in Structural Biology*, 79:102538, 2023.

Petar Veličković, Guillem Cucurull, Arantxa Casanova, Adriana Romero, Pietro Lio, and Yoshua Bengio. Graph attention networks. *arXiv preprint arXiv:1710.10903*, 2017.

Pascal Vincent, Hugo Larochelle, Isabelle Lajoie, Yoshua Bengio, Pierre-Antoine Manzagol, and Léon Bottou. Stacked denoising autoencoders: Learning useful representations in a deep network with a local denoising criterion. *Journal of machine learning research*, 11(12), 2010.

Felix Wu, Amauri Souza, Tianyi Zhang, Christopher Fifty, Tao Yu, and Kilian Weinberger. Simplifying graph convolutional networks. In *International conference on machine learning*, pp. 6861–6871. PMLR, 2019.

Yaochen Xie, Zhao Xu, and Shuiwang Ji. Self-supervised representation learning via latent graph prediction. In *International Conference on Machine Learning*, pp. 24460–24477. PMLR, 2022a.

Yaochen Xie, Zhao Xu, Jingtun Zhang, Zhengyang Wang, and Shuiwang Ji. Self-supervised learning of graph neural networks: A unified review. *IEEE transactions on pattern analysis and machine intelligence*, 45 (2):2412–2429, 2022b.

Ruibin Xiong, Yunchang Yang, Di He, Kai Zheng, Shuxin Zheng, Chen Xing, Huishuai Zhang, Yanyan Lan, Liwei Wang, and Tieyan Liu. On layer normalization in the transformer architecture. In *International Conference on Machine Learning*, pp. 10524–10533. PMLR, 2020.

Keyulu Xu, Weihua Hu, Jure Leskovec, and Stefanie Jegelka. How powerful are graph neural networks? In *International Conference on Learning Representations*, 2018.

Zhitao Ying, Jiaxuan You, Christopher Morris, Xiang Ren, Will Hamilton, and Jure Leskovec. Hierarchical graph representation learning with differentiable pooling. *Advances in neural information processing systems*, 31, 2018.

Yuning You, Tianlong Chen, Yongduo Sui, Ting Chen, Zhangyang Wang, and Yang Shen. Graph contrastive learning with augmentations. *Advances in neural information processing systems*, 33:5812–5823, 2020.

Tao Yu and Christopher M De Sa. Representing hyperbolic space accurately using multi-component floats. In M. Ranzato, A. Beygelzimer, Y. Dauphin, P.S. Liang, and J. Wortman Vaughan (eds.), *Advances in Neural Information Processing Systems*, volume 34, pp. 15570–15581. Curran Associates, Inc., 2021.

Hengrui Zhang, Qitian Wu, Junchi Yan, David Wipf, and Philip S Yu. From canonical correlation analysis to self-supervised graph neural networks. *Advances in Neural Information Processing Systems*, 34:76–89, 2021.

Wei Zhao, Federico Lopez, Maxwell J Riestenberg, Michael Strube, Diaaeldin Taha, and Steve Trettel. Modeling graphs beyond hyperbolic: Graph neural networks in symmetric positive definite matrices. In *Joint European Conference on Machine Learning and Knowledge Discovery in Databases*, pp. 122–139. Springer, 2023.