Controllable Text Generation with Neurally-Decomposed Oracle

Anonymous Author(s)
Affiliation
Address
email

Abstract

We propose a general and efficient framework to control auto-regressive generation models with NeurAlly-Decomposed Oracle (NADO). Given a pre-trained base language model and a sequence-level boolean oracle function, we propose to decompose the oracle function into token-level guidance to steer the base model in text generation. Specifically, the token-level guidance is approximated by a neural model trained with examples sampled from the base model, demanding no additional auxiliary labeled data. We present the closed-form optimal solution to incorporate the token-level guidance into the base model for controllable generation. We further provide a theoretical analysis of how the approximation quality of NADO affects the controllable generation results. Experiments conducted on two applications: (1) text generation with lexical constraints and (2) machine translation with formality control demonstrate that our framework efficiently guides the base model towards the given oracle while maintaining high generation quality.

1 Introduction

Auto-regressive language models have been widely used for text generation. With the recent development of large-scale pre-trained language models Radford et al. (2019); Brown et al. (2020); Raffel et al. (2020); Lewis et al. (2020), they have achieved state-of-the-art performances in applications such as machine translation (Bahdanau et al., 2015; Luong et al., 2015), image captioning (Anderson et al., 2018; You et al., 2016) and open domain text generation (Zhang and Lapata, 2014; Yao et al., 2019; Vinyals and Le, 2015; Shang et al., 2015; Lu et al., 2018). However, many applications require to control model output with specific sequence-level attributes. The attributes can be specified by a set of rules[1] or by an abstract concept (e.g., the generated text follows a particular writing style). How to control auto-regressive language models to satisfy these attributes is an open challenge.

In this paper, we propose a general and flexible framework for controllable generation. Given a base pre-trained language model and a sequence-level oracle function indicating whether an attribute is satisfied, our goal is to guide the text generation by the oracle to satisfy certain attributes. To this end, we propose decomposing the sequence-level attributes into token-level guidance. When generating $i-$th token in the output sequence, instead of sampling from the base model given the prefix, we modify the probability distribution of the output token based on the token-level guidance. Specifically, we formulate the control as an optimization problem based on posterior regularization (Ganchev et al., 2010) and solve the close-form optimal solution to incorporate the token-level guidance for

[1] For example, lexical constraints require that certain words need to appear in the generated text (Hokamp and Liu, 2017; Lin et al., 2020)

Submitted to 36th Conference on Neural Information Processing Systems (NeurIPS 2022). Do not distribute.

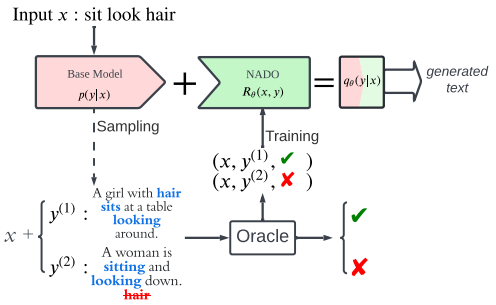

(a) We take lexically constrained generation as an example, where the oracle is checking whether all keywords in the input $\mathbf{x}$ are incorporated in generated text $\mathbf{y}$ produced by base model p. With proper training with the examples sampled from the base model p (dashed arrow) and labeled with the oracle, the oracle is decomposed into token-level NADO and realized by an auxiliary model R_θ. The R_θ provides guidance when generating text with the base model (see details in Fig. 1(b)).

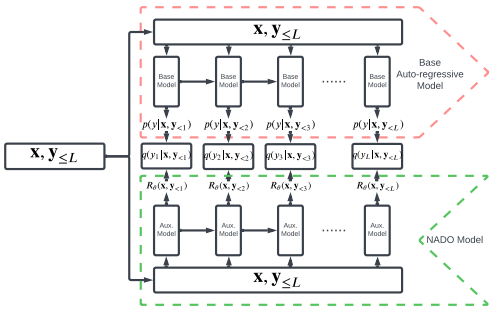

(b) The illustration of the controlled generation process. Both the base model and the auxiliary model (NADO) take input $\mathbf{x}$ and the generated sequence (prefix) $\mathbf{y}_{<L}$ as input. The base model, in each step, outputs a token distribution $p(y_i|\mathbf{x}, \mathbf{y}_{<i})$. Guided by NADO R_θ, we obtain the distribution q (See Sec. 3.2), based on which we generate the current token.

Figure 1: Illustration of pipeline incorporating NADO (left) and model architecture (right).

text generation. The decomposition is approximated by an auxiliary neural network model, called NeurAlly-Decomposed Oracle (NADO), which is trained on data sampled from the base model and supervised by the sequence-level oracle (see the illustration Fig. 1a). We further provide theoretical analysis on how NADO's approximation quality affects the controllable generation results. Note that in the entire process, we treat the base model and the sequence-level oracle as black-box functions, without the need for any refacting or fine-tuning.

A few existing controllable generation works (e.g., Lu et al. (2021)) design decoding algorithms for *lexical constraints*. However, their approach is purely algorithmic and cannot generally be applied to other types of oracles. Another line of work such as PPLM (Dathathri et al., 2020), GeDI (Krause et al., 2021), and FUDGE (Yang and Klein, 2021) also aim to guide the base model with an auxiliary model. However, they either shift the base model distribution in a post-hoc manner without theoretical guarantee, or/and require external labeled data to train the auxiliary model. Instead, we derive a closed-form solution for the optimal way to incorporate the oracle, without requiring external labeled data or token-level guidance. Furthermore, since NADO is trained on the data sampled from the base models, it aligns better with the base model and thus can achieve better control.

We conduct experiments on lexically constrained generation (LCG) tasks and a machine translation (MT) formality change task. In LCG tasks, the oracle is a rule-based keyword checker. We achieve almost perfect keyword incorporation with significantly boosted BLEU scores compared to previous approaches that design specific decoding algorithms Lu et al. (2020, 2021). In the formality-controlled MT task, we are provided with a formality oracle predicting whether a sentence is formal or not, and the goal is to guide the model to generate formal translations. Compared with recent work Yang and Klein (2021), we improve the BLEU score by 3 points as well as improve the formality rate, demonstrating NADO's superior ability in incorporating external oracle supervision. Both experiments demonstrate the effectiveness of our framework in dealing with various types of control and generating high-quality texts.

2 Related Work

Controllable Text Generation with Auto-regressive Models Most previous work on controllable text generation are based on the auto-regressive framework. Zhang et al. (2022) summarize these methods into three categories: fine-tuning, refact/retraining and post-processing. The first two

categories, e.g., CTRL (Keskar et al., 2019), prompt methods (Shin et al., 2020; Lester et al., 2021; Li and Liang, 2021), are usually weaker in controlling and inefficient in training considering the size of language models are dramatically increasing nowadays. Generally, the post-processing methods are considered expensive in inference and low quality in generated texts. However, our framework, as a kind of post-processing method, is able to achieve high generation quality demonstrated in experiments and is efficient in the inference time.

Controllable Text Generation via Post-processing There are two major lines in post-processing: (1) adapting the decoding algorithm and (2) guiding generation with an auxiliary model. For some token-level controlled generation tasks like lexically constrained generation, we can inject the constraints into the decoding algorithm (e.g., constrained beam search (Anderson et al., 2017) and NeuroLogic decoding (Lu et al., 2021)). Though shown effectiveness in lexically constrained generation, these algorithmic methods fail to fundamentally touch the token distribution, and are hard to handle other abstract attributes.

In the second line, PPLM (Dathathri et al., 2020) proposes an auxiliary discriminator for the expected attribute to guide the model; GeDi (Krause et al., 2021) and DEXPERTS (Liu et al., 2021) apply contrastive learning and train an auxiliary language model to reweight the token distribution in each step; Plug-and-Blend (Lin and Riedl, 2021) further extends the GeDi framework by adding a planner architecture. FUDGE (Yang and Klein, 2021) leverages external token-level oracle to train a discriminator for guiding the base model. These methods either require external token-level oracle guidance or auxiliary labeled datasets to train the auxiliary models. However, the distribution of the data used to train the auxiliary model is different from what the based model is trained on. This distributional discrepancy causes the drop of generating quality as we will show in the experiments. For example, given a controlling attribute a, Fudge generates next token y_i based on Bayesian rule $P(y_i|\mathbf{y}_{<i}, a) \propto P(a|\mathbf{y}_{\leq i})P(y_i|\mathbf{y}_{<i})$. However, their $P(a|\mathbf{y}_{\leq i})$ and $P(y_i|\mathbf{y}_{<i})$ are not estimated based on the same distribution. In contrast, NADO is trained with data sampled from the base model. Therefore, it learns to incorporate with the base model, which avoids the distributional discrepancy. We also provide a principle, theoretical framework to discuss the optimal solution of incorporating the sequence-level oracle.

3 Methodology

We approach the sequence-level controllable generation problem by decomposing the sentence-level oracle into token-level guidance. We formulate this as an optimization problem. Since the token-level guidance is intractable, we propose to train an auxiliary model, called NeurAlly-Decomposed Oracle (NADO), to approximate it. During the inference time, NADO guides the base model to generate sequences that satisfy the oracle constraints.

In the rest of this section, we discuss 1) the formulation to decompose the sequence-level oracle function into token-level guidance; 2) the formulation to incorporate the token-level guidance into the base model to achieve control; 3) the approximation of the token-level guidance using NADO; 4) a theoretical analysis of the impact of NADO approximation to the controllable generation results; and 5) the training of NADO.

3.1 Notations and Problem Formulation

We use $\mathbf{x} \in \mathcal{X}$ to denote the input and $\mathbf{y} \in \mathcal{Y}$ to denote the generated sequence. y_i is the $i-$th token in $\mathbf{y}$ and $\mathbf{y}_{<i}$ is the sequence prefix from the beginning to the $(i-1)-$th token. We denote the base auto-regressive generation model as $p(y_i|\mathbf{x}, \mathbf{y}_{<i})$, hence the sequence-level distribution is given by $p(\mathbf{y}|\mathbf{x}) = \prod_i p(y_i|\mathbf{x}, \mathbf{y}_{<i})$. A sequence-level oracle is defined as a boolean function $C : \mathcal{X} \times \mathcal{Y} \to \{0, 1\}$. We formalize the optimization objective based on posterior regularization (Ganchev et al., 2010). Basically, we explore a token-level distribution $q^*(y_i|\mathbf{x}, \mathbf{y}_{<i})$ and its corresponding sequence-level distribution $q^*(\mathbf{y}|\mathbf{x})$, satisfying

1. $q^*(\mathbf{y}|\mathbf{x}) = \prod_i q^*(y_i|\mathbf{x}, \mathbf{y}_{<i})$, <u>i.e.</u>, q^* can be treated as an auto-regressive model.

2. $q^*(\mathbf{y}|\mathbf{x}) = 0$ if $C(\mathbf{x}, \mathbf{y}) = 0$, i.e., q^* only generates sequences satisfying the oracle C.
3. Given an input $\mathbf{x}$, $KL(p(\mathbf{y}|\mathbf{x})\|q^*(\mathbf{y}|\mathbf{x}))$ is minimized, i.e., q^* should be as similar to the base model as possible.

3.2 Token-level Guidance and Closed-Form Solution For q^*

Before we compute the solution for q^*, given the base model p and oracle C, we first define the token-level guidance as a success rate prediction function $R_p^C(\mathbf{x})$, which defines the probability of the sequence generated by p satisfies the oracle given input $\mathbf{x}$. We further define $R_p^C(\mathbf{x}, \mathbf{y}_{<i})$ as the probability given input $\mathbf{x}$ and prefix $\mathbf{y}_{<i}$. By definition, we have

$$\begin{aligned} R_p^C(\mathbf{x}) &= \Pr_{\mathbf{y}\sim p(\mathbf{y}|\mathbf{x})}\left[C(\mathbf{x}, \mathbf{y}) = 1\right] = \sum\nolimits_{\mathbf{y}\in\mathcal{Y}} p(\mathbf{y}|\mathbf{x})C(\mathbf{x}, \mathbf{y}) \\ R_p^C(\mathbf{x}, \mathbf{y}_{<i}) &= \Pr_{\mathbf{y}\sim p(\mathbf{y}|\mathbf{x})}\left[C(\mathbf{x}, \mathbf{y}) = 1|\mathbf{y}_{<i}\right] = \sum\nolimits_{\mathbf{y}\in\mathcal{Y}} p(\mathbf{y}|\mathbf{x}, \mathbf{y}_{<i})C(\mathbf{x}, \mathbf{y}). \end{aligned} \tag{1}$$

With the function R_p^C, we are now able to derive the closed-form solution of q^* considering conditions (2) and (3) defined in Sec. 3.1. Given input $\mathbf{x}$, we define the feasible sequence-level distribution set Q as

$$Q := \{q| \sum\nolimits_{\mathbf{y}:\ C(\mathbf{x},\mathbf{y})=0} q(\mathbf{y}|\mathbf{x}) = 0\}, \tag{2}$$

then the sequence-level closed-form solution for q^* is given by

$$q^*(\mathbf{y}|\mathbf{x}) = \arg\min_{q\in Q} KL(p(\mathbf{y}|\mathbf{x})\|q(\mathbf{y}|\mathbf{x})) = \frac{p(\mathbf{y}|\mathbf{x})C(\mathbf{x}, \mathbf{y})}{R_p^C(\mathbf{x})}. \tag{3}$$

Considering condition (1) and making q^* tractable, we decompose $q^*(\mathbf{y}|\mathbf{x})$ into token-level. The closed-form solution is given by

$$q^*(y_i|\mathbf{x}, \mathbf{y}_{<i}) = \frac{R_p^C(\mathbf{x}, \mathbf{y}_{<i})}{R_p^C(\mathbf{x}, \mathbf{y}_{<i-1})} p(y_i|\mathbf{x}, \mathbf{y}_{<i}). \tag{4}$$

The decomposition is unique. The proof and detailed derivation can be found in the appendix.

Control with Soft Constraints. In Eq. (2) we define the feasible distribution set as distribution that the possibility of a sequence violate the oracle function is 0. However, in some applications, we expect to control the generation with soft constraints. For example, we want the model to generate sentence about sports with probability $r = 0.8$. Our framework also supports controlling the generation with soft constraints. To achieve this, with a pre-defined ratio $r \in [0, 1]$, we alternatively define a general feasible set Q as

$$Q := \{q| \sum\nolimits_{\mathbf{y}:\ C(\mathbf{x},\mathbf{y})=0} q(\mathbf{y}|\mathbf{x}) = r\},$$

where Eq. (2) is the special case when $r = 0$. The general token-level closed-form solution is

$$q^*(y_i|\mathbf{x}, \mathbf{y}_{<i}) = \frac{\alpha R_p^C(\mathbf{x}, \mathbf{y}_{<i}) + \beta(1 - R_p^C(\mathbf{x}, \mathbf{y}_{<i}))}{\alpha R_p^C(\mathbf{x}, \mathbf{y}_{<i-1}) + \beta(1 - R_p^C(\mathbf{x}, \mathbf{y}_{<i-1}))} p(y_i|\mathbf{x}, \mathbf{y}_{<i}),$$

where $\alpha = \frac{r}{R_p^C(\mathbf{x})}, \beta = \frac{1-r}{1-R_p^C(\mathbf{x})}$.

Similar to Eq. (4), once we have access to R_p^C, we can directly compute the closed-form solution even though the form is much more complicated. In this paper we only focus on the hard constraint ($r = 0$), however, here we demonstrate that our framework is capable for the relaxed controlling.

3.3 Approximating R_p^C by NADO and Theoretical Analysis

Unfortunately, function R_p^C defined in Eq. (1) is intractable. We cannot enumerate all the possible sequence $\mathbf{y}$ since the space is exponentially large. Hence, we train a neural model NADO to

approximate this well-defined function. We use R_θ to denote NADO parameterized by θ. In this section, we derive bounds to have a theoretical analysis about the correlation between errors in approximation and errors in corresponding sequence-level distribution. Generally, when R_θ approximates R_p^C precisely enough, we have an upper bound for the sequence-level distribution discrepancy. The following lemma provides the formal definition.

Lemma 1 We define distribution

$$q(y_i|\mathbf{x}, \mathbf{y}_{<i}) \propto \frac{R_\theta(\mathbf{x}, \mathbf{y}_{<i})}{R_\theta(\mathbf{x}, \mathbf{y}_{<i-1})} p(y_i|\mathbf{x}, \mathbf{y}_{<i}). \tag{5}$$

If there exists $\delta > 1$ such that given input $\mathbf{x}$, $\forall \mathbf{y}_{<i}$, $\frac{1}{\delta} < \frac{R_\theta(\mathbf{x},\mathbf{y}_{<i})}{R_p^C(\mathbf{x},\mathbf{y}_{<i})} < \delta$, we have

$$KL(q^*(\mathbf{y}|\mathbf{x}) \| q(\mathbf{y}|\mathbf{x})) < (2L + 2) \ln \delta,$$

where L is the length of the sequence $\mathbf{y}$.

We also notice that by definition, R_p^C satisfies the following equation:

$$\sum\nolimits_{y_i} R_p^C(\mathbf{x}, \mathbf{y}_{<i}) p(y_i|\mathbf{x}, \mathbf{y}_{<i}) = R_p^C(\mathbf{x}, \mathbf{y}_{<i-1}). \tag{6}$$

If R also satisfies Eq. (6), we can tighten this bound. Formally,

Lemma 2 Given the condition in Lemma 1, if q is naturally a valid distribution without normalization (i.e., $\sum_{y_i} \frac{R_\theta(\mathbf{x},\mathbf{y}_{<i})}{R_\theta(\mathbf{x},\mathbf{y}_{<i-1})} p(y_i|\mathbf{x}, \mathbf{y}_{<i}) = 1$), we have

$$\forall x, KL(q^*(\mathbf{y}|\mathbf{x}) \| q(\mathbf{y}|\mathbf{x})) < 2 \ln \delta.$$

This lemma shows that with the auto-regressive property, the error does not accumulate along with the sequence. The proof is in the appendix. The proof is in the appendix. This two bounds show that in training of model R, we should push R_θ to satisfy Eq. (6) as well as approximating R_p^C.

3.4 Training NADO

In Fig. 1b we show the architecture of NADO. Generally, NADO can be any seq2seq model. In training, it takes $\mathbf{x}, \mathbf{y}$ as input and predicts from $R_\theta(\mathbf{x}, \mathbf{y}_{<0})$ to $R_\theta(\mathbf{x}, \mathbf{y}_{<T})$. In the inference, there are two parallel forward pass[2] to compute the token distribution q. Considering the decoder size of the NADO is usually far less than the base model, the whole forward pass takes no more than 2x base model forward pass.

Now we discuss about the training objective. In training, with some predefined input distribution $\mathcal{X}$, we sample $\mathbf{x} \sim \mathcal{X}$, $\mathbf{y} \sim p(\mathbf{y}|\mathbf{x})$. We take these sampled $(\mathbf{x}, \mathbf{y})$ pairs as training examples, and use the boolean value $C(\mathbf{x}, \mathbf{y})$ as their labels for all steps. We use cross entropy (denoted as $CE(\cdot, \cdot)$) as the loss function, formally, $L_{CE}(\mathbf{x}, \mathbf{y}, R_\theta) = \sum_{i=0}^{T} CE(R_\theta(\mathbf{x}, \mathbf{y}_{<i}), C(\mathbf{x}, \mathbf{y}))$. Given a particular input $\mathbf{x}$, in expectation, we have

$$\begin{aligned}
\mathbb{E}_{\mathbf{y}\sim p(\mathbf{y}|\mathbf{x})} L_{CE}(\mathbf{x}, \mathbf{y}, R_\theta) &= \sum\nolimits_{\mathbf{y}\in\mathcal{Y}} p(\mathbf{y}|\mathbf{x}) L_{CE}(\mathbf{x}, \mathbf{y}, R_\theta) \\
&= \sum_{i=0}^{T} R_p^C(\mathbf{x}, \mathbf{y}_{<i}) \log R_\theta(\mathbf{x}, \mathbf{y}_{<i}) + (1 - R_\theta(\mathbf{x}, \mathbf{y}_{<i})) \log(1 - R_\theta(\mathbf{x}, \mathbf{y}_{<i})) \\
&= \sum_{i=0}^{T} CE(R_p^C(\mathbf{x}, \mathbf{y}_{<i}), R_\theta(\mathbf{x}, \mathbf{y}_{<i}))
\end{aligned} \tag{7}$$

Therefore, L_{CE} empirically estimates the cross entropy loss between R_θ and the ground truth R_p^C which is intractable.

[2] In practice, to avoid enumerating the vocabulary, R_θ outputs a vector over vocabulary (i.e., $R_\theta(\mathbf{x}, \mathbf{y}_{<i} \oplus y)$ for all possible y, $\oplus$ is the concatenation operation), then we can directly do element-wise multiplication between R_θ and p.

As we analyze above, we also regularize R_θ for satisfying Eq. (6) based on KL-divergence:

$$L_{reg}(\mathbf{x}, \mathbf{y}, R_\theta) = f_{KL}\left(\sum_{y_i} R_\theta(\mathbf{x}, \mathbf{y}_{<i}) p(y_i|\mathbf{x}, \mathbf{y}_{<i}), R_\theta(\mathbf{x}, \mathbf{y}_{<i-1})\right).$$

$f_{KL}(p, q) = p \log \frac{p}{q} + (1-p) \log \frac{1-p}{1-q}$ is KL-divergence regarding p and q as two Bernoulli distributions. We use a hyper-parameter $\lambda > 0$ to balance these losses. The final training loss is

$$L(\mathbf{x}, \mathbf{y}, R_\theta) = L_{CE}(\mathbf{x}, \mathbf{y}, R_\theta) + \lambda L_{reg}(\mathbf{x}, \mathbf{y}, R_\theta). \tag{8}$$

3.5 Sampling

In Sec. 3.4 we describe that we train NADO by sampled data from base model p. One advantage is that we are able to leverage different sampling strategies to better adapt to different application scenarios. It is also possible to leverage reinforcement learning to train R_θ, and we discuss our connection to reinforcement learning in the appendix. In this section, we introduce two sampling strategies and their corresponding properties.

Sampling with Temperature Control. In some task, the output sequences are not diverse much, in other words, the token distribution in each step is very peaky. Since our NADO is trained on the sampled examples, we expect those examples to cover as much tokens combination as possible to avoid overfitting. Therefore, we add temperature factor T to smooth the distribution (Ackley et al., 1985). Specifically, we sample $\mathbf{y}$ from distribution $p(\mathbf{y}|\mathbf{x})^{\frac{1}{T}}$, and add coefficient $p(\mathbf{y}|\mathbf{x})^{1-\frac{1}{T}}$ when computing the cross-entropy loss. Formally, the expected loss is

$$\mathbb{E}_{\mathbf{y} \sim p(\mathbf{y}|\mathbf{x})^{\frac{1}{T}}}\left[p(\mathbf{y}|\mathbf{x})^{1-\frac{1}{T}} L_{CE}(\mathbf{x}, \mathbf{y}, R_\theta)\right] = \sum\nolimits_{\mathbf{y} \in \mathcal{Y}} p(\mathbf{y}|\mathbf{x}) L_{CE}(\mathbf{x}, \mathbf{y}, R_\theta),$$

which is same as the original expected loss in Eq. (7).

Importance Sampling. In practice, the training process of NADO can be extraordinarily difficult when samples generated by the base model p hardly satisfy C. i.e. $\mathbb{E}_{\mathbf{y} \sim p(\mathbf{y}|\mathbf{x})}[p(C|\mathbf{x}, \mathbf{y})] \simeq 0$. Hence, we introduce the importance sampling (Hammersley and Morton, 1954) to tackle this issue. Basically, we leverage existing partially trained $\hat{R}_\theta$ to form distribution $\hat{q}$. Although $\hat{R}_\theta$ is not well-trained, it is still able to provide positive guidance to produce samples satisfying C. Note that $\hat{q}$ does not have to be updated in each training epoch. With coefficient $\frac{p(\mathbf{y}|\mathbf{x})}{\hat{q}(\mathbf{y}|\mathbf{x})}$, the expected loss is same as the original expected loss:

$$\mathbb{E}_{\mathbf{y} \sim \hat{q}(\mathbf{y}|\mathbf{x})}\left[\frac{p(\mathbf{y}|\mathbf{x})}{\hat{q}(\mathbf{y}|\mathbf{x})} L_{CE}(\mathbf{x}, \mathbf{y}, R_\theta)\right] = \sum\nolimits_{\mathbf{y} \in \mathcal{Y}} p(\mathbf{y}|\mathbf{x}) L_{CE}(\mathbf{x}, \mathbf{y}, R_\theta).$$

4 Experiments

We conduct experiments on two tasks: lexically constrained generation (LCG) and machine translation (MT) with formality change. For the former, we use GPT-2 (Radford et al., 2019) as the base model and for the latter, we use a sequence-to-sequence model, MarianMT (Junczys-Dowmunt et al., 2018). We demonstrate our framework is generally effective in both scenarios. The boolean oracle is a rule-based function checking whether all lexical constraints are satisfied in LCG task, while in MT it is a classifier trained on an external dataset identifying the formality of the text. We put all details about hyper-parameter settings in the appendix.

4.1 Text Generation with Lexical Constraints

We evaluate our model on two general classes of LCG problems: 1) unsupervised LCG, i.e. annotation for lexical constraints are not available during training, but are expected to be in their exact order and lexical form during inference; 2) supervised LCG, i.e. annotation for lexical constraints are available, yet the words may appear in a different lexical form (e.g., "look" can appear in the past tense "looked") or a different order in the generated text. In both cases, we define oracle C as a

boolean function indicating whether the generated sequence satisfies all of the lexical constraints. We do not naturally have negative samples (i.e. the sequences that do not satisfy all constraints) to train the auxiliary model in both settings, thus, it is non-trivial to compare against methods requiring both positive and negative labeled data for training the auxiliary model like FUDGE and GeDi.

Data Setup For unsupervised LCG, we follow the settings in POINTER (Zhang et al., 2020) and conduct our experiments on Yelp! Review and News dataset. Each of the unsupervised LCG dataset contains a great number of un-annotated, raw sequences for training (160K for Yelp! Review and 268,586 for News). During inference, the model is expected to generate text lexically constrained in the exact order and form by a specific number of keywords (7 for Yelp! Review and 4 for News). For supervised LCG, we evaluate the proposed method on CommonGen (Lin et al., 2020). CommonGen is a supervised LCG task that aims to examine the commonsense of neural text generation models. For training, it contains 32,651 unique key concepts (i.e. the constraints) with 67,389 completed sequences in total. It also contains a validation set with 993 concepts and 4018 reference sequences. For a more robust evaluation, the dataset maintains an open leaderboard that benchmarks different approaches on a withheld test set. We follow most of the data configurations specified in the original paper that first introduced the datasets.

General Model Setup We investigate the effectiveness of different factors in our framework by enumerating different combinations of them. We implement two types of base model:

- (Seq2seq base model) A sequence-to-sequence model $p(\mathbf{y}|\mathbf{x})$ that takes into account the lexical constraints as condition sequence input;
- (DA base model) A language model that is only domain-adapted to $p(\mathbf{y})$ but unconditioned on anything. This is a challenging setting, since we impose the lexical constraints only with NADO. This setting is to better verify the effectiveness and efficiency of the proposed method and control irrelevant factors.

Under both $p(\mathbf{y}|\mathbf{x})$ and $p(\mathbf{y})$ settings, we fine-tune the base model from the pre-trained GPT2-Large.

During training, NADO is trained as a Seq2seq-like model, which takes in the keys (for unsupervised LCGs, they are generated by randomly sampling a specific number of natural words in the original sentence) and generates the token-level guidance $R_\theta(\mathbf{x}, \mathbf{y}_{\leq i})$. For each pseudo key, we sample 32 target text with top-p ($p = 0.8$) random sampling from base model p. We conduct experiments to test different training setups for NADO:

- (NADO training) The proposed training process described in Sec. 3.4.
- (Warmup) We warm up NADO by maximizing the likelihood of positive samples, but only backpropagating the gradient to the parameters of R_θ. The warm-up R_θ is used for importance sampling described in Sec. 3.5. With DA base models, however, the warmup process is always incorporated for practical success of training (see the results for DA pretrained w/o warmup).

We also consider the setting with warmup only, which can be treated as a stronger baseline to verify that the major improvement of our framework is not coming from the extended capacity in NADO.

Results and Analysis We compare the performance under different setups of our model to previous state-of-the-art methods on LCG tasks, including insertion-based models (Levenshtein Transformer (Gu et al., 2019) with Lexical Constraints (Susanto et al., 2020), InsNet (Lu and Peng, 2021), etc.) and decoding-based algorithms. We also compare the results with a simple baseline which address the problems with a standard Seq2seq pipeline. The results are as shown in Table 1.

NADO consistently improves the BLEU score and coverage in different setups. Furthermore, under the best setting of each task (see bolded items in the table), NADO performs significantly better than most baselines in generation quality and can achieve very good lexical constraints coverage rate. Compared to InsNet, it is much easier for an autoregressive model with NADO to handle flexible reordering/transformation of lexical constraints. This is reflected in the performance comparison of InsNet and NADO on CommonGen dataset. Under most settings, a Seq2seq base model makes it easier for the framework to perform well, as it guarantees a reasonable level of lexical constraint

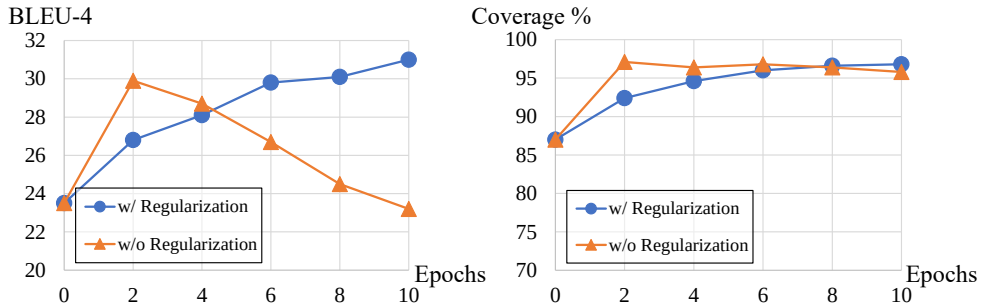

(a) BLEU-4 comparison of NADO training with/without using Eq. 6

(b) Coverage comparison of NADO training with/without using Eq. (6).

Figure 2: Comparative study of the effectiveness of regularization in NADO training.

Table 1: Unsupervised/Supervised Lexically Constrained Generation results on Yelp Review (unsupervised), News (unsupervised) and CommonGen (supervised) dataset. CVRG stands for constraints coverage. For insertion-based models, on CommonGen dataset we directly use the keyword as initial context with no further permutation. p, q denote the base model and the combined model in our framework, respectively. The domain adaptation pretrained model produces samples unconditioned on the constraints, and thus results in worse results than other setups. Results with * mark are from the open leader board on the test set instead of development set.

Dataset	Yelp Review (test)		News (test)		CommonGen (dev)	
Metrics	BLEU-2/4	CVRG	BLEU-2/4	CVRG	BLEU-3/4	CVRG
Insertion-based Baselines						
InsNet-Sequential (Lu and Peng, 2021)	19.4/5.8	100%	16.3/5.0	100%	26.2/18.7	100%
ConstLevT (Susanto et al., 2020)	14.8/4.0	100%	11.8/1.9	100%	21.3/12.3*	96.9%*
Algorithmic Baselines						
GPT-2-Large Finetune + Sampling	16.4/5.3	94.5%	13.2/4.2	81.8%	34.2/24.7*	82.2%*
Neural Logic (Lu et al., 2020)	-	-	-	-	36.7/26.7*	97.7%*
Model Setups (Ours)						
p (Domain Adaptation pretrain)	5.3/0.4	5.4%	4.0/0.8	0.9%	9.3/3.9	8.5%
p (Seq2seq pretrain)	16.6/4.8	91.2%	13.0/3.4	74.0%	34.2/23.5	87.0%
q (DA pretrained p + warmup)	16.2/4.3	75.4%	12.6/2.8	66.7%	32.7/20.9	79.7%
q (DA pretrained p + warmup + NADO)	16.9/5.4	95.6%	**15.4/4.7**	**92.3%**	37.8/26.2	96.1%
q (Seq2seq pretrained p + warmup)	16.8/5.7	94.2%	13.6/4.2	85.0%	35.2/24.8	90.2%
q (Seq2seq pretrained p + NADO)	**17.4/6.0**	**96.7%**	15.0/4.5	91.9%	**40.9/30.8**	**97.1%**
q (Seq2seq pretrained p + warmup + NADO)	16.7/4.7	92.8%	14.4/4.4	86.1%	40.2/30.3	95.9%
GPT-2 Base Reference						
q (Seq2seq pretrained p + warmup)	-	-	-	-	32.17/22.98	76.8%
q (Seq2seq pretrained p + NADO)	-	-	-	-	33.61/24.01	85.5%

coverage in even the initial state of the model. However, results from using a DA pretrained base model with R_θ warmup and NADO under importance sampling show that it is still possible to obtain a powerful model with the proposed method under a more challenging setting.

To study the importance of the regularization term, we conduct an ablative study under the optimal setting on the CommonGen dataset (Seq2seq base model with NADO only). The results are shown in Figure 2. While the success of achieving lexical control does not degenerate when NADO w/o regularization overfits, adding regularization can significantly improve the robustness of NADO generation quality when training NADO for more epochs.

4.2 Machine Translation with Formality Change

Datasets and Setup We follow the experimental setting in FUDGE (Yang and Klein, 2021) to formalize the results of machine translation. Given an informal source sentence, our goal is to

Table 2: Formal Machine Translation results. We follow (Yang and Klein, 2021) setting to choose BLEU score and average formality scores as the metric. We slightly improve the formality score compared to FUDGE, while significantly boost the BLEU score.

Method	BLEU	Avg. Formality
MarianMT (Junczys-Dowmunt et al., 2018)	16.98	0.45
FUDGE (Yang and Klein, 2021)	17.96	0.51
NADO + Random Sampling	20.84	0.54
NADO + Sampling with $T = 5/4$	21.04	0.53
NADO + Sampling with $T = 5/3$	20.77	0.52

translate it into formal sentence written in the target language. We conduct our experiments on Fisher and CALLHOME Spanish-English Speech Translation Corpus (Post et al., 2013), where both of the Spanish source and English reference are informal and casual. Instead of evaluating the translation on original references, we use the formal and fluent rewritten version of references (Salesky et al., 2019) to evaluate the translation quality by BLEU scores. In the training process, the formal version reference is unseen to the models. We also evaluate the formality scores by a discriminator trained on GYAFC formality dataset (Rao and Tetreault, 2018) as what FUDGE paper does. In this experiment, pre-trained Marian MT model (Junczys-Dowmunt et al., 2018) is used as the base model.

In FUDGE, the authors train an auxiliary model also on GYAFC modeling token-level guidance $P(\text{formal}|\mathbf{y}_{<i})$, and leverage it to guide the base model by Bayesian rule

$$P(y_i|\mathbf{y}_{<i}, \text{formal}) \propto P(y_i|\mathbf{y}_{<i})P(\text{formal}|\mathbf{y}_{\leq i}). \tag{9}$$

For the formality supervision, FUDGE leverages an external token-level oracle. In NADO, we load the same oracle but exclusively leverage sequence-level binary supervision as oracle C. We randomly choose 10,000 (7.2%) source texts from the training set as input examples, and sample 8 target texts by sampling with temperature T from base model p for each source text. We use those sampled examples to train NADO. In total, we have $80,000$ training samples, which is similar to the number of training data (105k) for the token-level oracle in FUDGE. All the methods are using greedy decoding.

Results and Discussion The experimental results are shown in Table 2. Compared to FUDGE, although only the sequence-level supervision is leveraged, we are consistently better in both metrics, especially in BLEU score we boost about 3 points. We conjecture that the improvement is because our formulation is more principle and correct. In methods using auxiliary model to guide the base model, including FUDGE, their formulation is based on Eq. 9. However, the auxiliary model is trained on a distribution different from where the base model is pretrained on, which leads to a distributional discrepancy issue. In other words, directly multiplying these two terms is not rigorous, since they are estimated on two different distributions. On the contrary, NADO is trained specifically to the base model. This avoids the discrepancy issue and provides an accurate guidance. Considering we are using the same oracle function and similar number of training samples, the higher generation quality reflected by BLEU scores supports our conjecture.

In sampling, for each input we sample 8 examples to train R_θ, which are usually identical in this task. Applying temperature in sampling allows NADO to be trained with more diverse data. Results show that with a properly set temperature, we can further improve the generation quality.

5 Conclusion

We purpose a general and efficient framework for controllable generation. We leverage an auxiliary neural model, NADO, to approximate the decomposed oracle guidance, and incorporate it with a fixed base model. By training with sampled data from the base model, NADO aligns better with the base model, and our framework is more flexible dealing with various application scenarios provided by different sampling methods. As NADO is a general framework, in the future, we plan to apply it in boarder application scenarios. For example, reducing societal bias (Sheng et al., 2019) (e.g., gender or racial bias) in generation by providing corresponding oracle.

Limitation

In this work we assume a practical setting, where we have a base model with decent quality (e.g., large pretrained language models) and a good oracle for the controlled attributes. The model behaviours under a low quality base model or a oracle with spurious correlation and superficial shortcuts is pending further discussion.

We also note that as other language generation approaches, there is a risk that malicious users may use NADO to generate improper or toxic texts and the generated text may contain societal biases inherited from data. However, on the other hand, NADO could be a powerful weapon against the toxicity. We refer readers to the discussion in Sheng et al. (2019); Zellers et al. (2019); Bender et al. (2021); Radford et al. (2019); Brown et al. (2020).

References

David H Ackley, Geoffrey E Hinton, and Terrence J Sejnowski. 1985. A learning algorithm for boltzmann machines. Cognitive science, 9(1):147–169.

Peter Anderson, Basura Fernando, Mark Johnson, and Stephen Gould. 2017. Guided open vocabulary image captioning with constrained beam search. In EMNLP, pages 936–945. Association for Computational Linguistics.

Peter Anderson, Xiaodong He, Chris Buehler, Damien Teney, Mark Johnson, Stephen Gould, and Lei Zhang. 2018. Bottom-up and top-down attention for image captioning and visual question answering. In CVPR, pages 6077–6086. Computer Vision Foundation / IEEE Computer Society.

Dzmitry Bahdanau, Kyunghyun Cho, and Yoshua Bengio. 2015. Neural machine translation by jointly learning to align and translate. In ICLR.

Emily M. Bender, Timnit Gebru, Angelina McMillan-Major, and Shmargaret Shmitchell. 2021. On the dangers of stochastic parrots: Can language models be too big? In FAccT, pages 610–623. ACM.

Ondřej Bojar, Rajen Chatterjee, Christian Federmann, Yvette Graham, Barry Haddow, Shujian Huang, Matthias Huck, Philipp Koehn, Qun Liu, Varvara Logacheva, Christof Monz, Matteo Negri, Matt Post, Raphael Rubino, Lucia Specia, and Marco Turchi. 2017. Findings of the 2017 conference on machine translation (wmt17). In Proceedings of the Second Conference on Machine Translation, Volume 2: Shared Task Papers, pages 169–214, Copenhagen, Denmark. Association for Computational Linguistics.

Tom Brown, Benjamin Mann, Nick Ryder, Melanie Subbiah, Jared D Kaplan, Prafulla Dhariwal, Arvind Neelakantan, Pranav Shyam, Girish Sastry, Amanda Askell, et al. 2020. Language models are few-shot learners. Advances in neural information processing systems, 33:1877–1901.

Woon Sang Cho, Pengchuan Zhang, Yizhe Zhang, Xiujun Li, Michel Galley, Chris Brockett, Mengdi Wang, and Jianfeng Gao. 2018. Towards coherent and cohesive long-form text generation. arXiv preprint arXiv:1811.00511.

Sumanth Dathathri, Andrea Madotto, Janice Lan, Jane Hung, Eric Frank, Piero Molino, Jason Yosinski, and Rosanne Liu. 2020. Plug and play language models: A simple approach to controlled text generation. In ICLR. OpenReview.net.

Kuzman Ganchev, Jennifer Gillenwater, Ben Taskar, et al. 2010. Posterior regularization for structured latent variable models. Journal of Machine Learning Research, 11(Jul):2001–2049.

Jiatao Gu, Changhan Wang, and Junbo Zhao. 2019. Levenshtein transformer. Advances in Neural Information Processing Systems, 32.

Jiaxian Guo, Sidi Lu, Han Cai, Weinan Zhang, Yong Yu, and Jun Wang. 2018. Long text generation via adversarial training with leaked information. In Proceedings of the AAAI Conference on Artificial Intelligence, volume 32.

John M Hammersley and K William Morton. 1954. Poor man's monte carlo. Journal of the Royal Statistical Society: Series B (Methodological), 16(1):23–38.

Chris Hokamp and Qun Liu. 2017. Lexically constrained decoding for sequence generation using grid beam search. In ACL (1), pages 1535–1546. Association for Computational Linguistics.

Marcin Junczys-Dowmunt, Roman Grundkiewicz, Tomasz Dwojak, Hieu Hoang, Kenneth Heafield, Tom Neckermann, Frank Seide, Ulrich Germann, Alham Fikri Aji, Nikolay Bogoychev, André F. T. Martins, and Alexandra Birch. 2018. Marian: Fast neural machine translation in C++. In ACL (4), pages 116–121. Association for Computational Linguistics.

Nitish Shirish Keskar, Bryan McCann, Lav R. Varshney, Caiming Xiong, and Richard Socher. 2019. CTRL: A conditional transformer language model for controllable generation. CoRR, abs/1909.05858.

Ben Krause, Akhilesh Deepak Gotmare, Bryan McCann, Nitish Shirish Keskar, Shafiq R. Joty, Richard Socher, and Nazneen Fatema Rajani. 2021. Gedi: Generative discriminator guided sequence generation. In Findings of the Association for Computational Linguistics: EMNLP 2021, Virtual Event / Punta Cana, Dominican Republic, 16-20 November, 2021, pages 4929–4952. Association for Computational Linguistics.

Brian Lester, Rami Al-Rfou, and Noah Constant. 2021. The power of scale for parameter-efficient prompt tuning. In EMNLP (1), pages 3045–3059. Association for Computational Linguistics.

Mike Lewis, Yinhan Liu, Naman Goyal, Marjan Ghazvininejad, Abdelrahman Mohamed, Omer Levy, Veselin Stoyanov, and Luke Zettlemoyer. 2020. BART: denoising sequence-to-sequence pre-training for natural language generation, translation, and comprehension. In ACL, pages 7871–7880. Association for Computational Linguistics.

Xiang Lisa Li and Percy Liang. 2021. Prefix-tuning: Optimizing continuous prompts for generation. In ACL/IJCNLP (1), pages 4582–4597. Association for Computational Linguistics.

Bill Yuchen Lin, Wangchunshu Zhou, Ming Shen, Pei Zhou, Chandra Bhagavatula, Yejin Choi, and Xiang Ren. 2020. Commongen: A constrained text generation challenge for generative commonsense reasoning. Findings of EMNLP.

Zhiyu Lin and Mark O. Riedl. 2021. Plug-and-blend: A framework for plug-and-play controllable story generation with sketches. In AIIDE, pages 58–65. AAAI Press.

Alisa Liu, Maarten Sap, Ximing Lu, Swabha Swayamdipta, Chandra Bhagavatula, Noah A. Smith, and Yejin Choi. 2021. Dexperts: Decoding-time controlled text generation with experts and anti-experts. In ACL/IJCNLP (1), pages 6691–6706. Association for Computational Linguistics.

Sidi Lu and Nanyun Peng. 2021. On efficient training, controllability and compositional generalization of insertion-based language generators. CoRR, abs/2102.11008.

Sidi Lu, Yaoming Zhu, Weinan Zhang, Jun Wang, and Yong Yu. 2018. Neural text generation: Past, present and beyond. arXiv preprint arXiv:1803.07133.

Ximing Lu, Peter West, Rowan Zellers, Ronan Le Bras, Chandra Bhagavatula, and Yejin Choi. 2020. Neurologic decoding:(un) supervised neural text generation with predicate logic constraints. arXiv preprint arXiv:2010.12884.

Ximing Lu, Peter West, Rowan Zellers, Ronan Le Bras, Chandra Bhagavatula, and Yejin Choi. 2021. Neurologic decoding: (un)supervised neural text generation with predicate logic constraints. In NAACL-HLT, pages 4288–4299. Association for Computational Linguistics.

Thang Luong, Hieu Pham, and Christopher D. Manning. 2015. Effective approaches to attention-based neural machine translation. In EMNLP, pages 1412–1421. The Association for Computational Linguistics.

Matt Post, Gaurav Kumar, Adam Lopez, Damianos G. Karakos, Chris Callison-Burch, and Sanjeev Khudanpur. 2013. Improved speech-to-text translation with the fisher and callhome spanish-english speech translation corpus. In IWSLT.

Alec Radford, Jeffrey Wu, Rewon Child, David Luan, Dario Amodei, Ilya Sutskever, et al. 2019. Language models are unsupervised multitask learners. OpenAI blog, 1(8):9.

Colin Raffel, Noam Shazeer, Adam Roberts, Katherine Lee, Sharan Narang, Michael Matena, Yanqi Zhou, Wei Li, and Peter J. Liu. 2020. Exploring the limits of transfer learning with a unified text-to-text transformer. J. Mach. Learn. Res., 21:140:1–140:67.

Sudha Rao and Joel R. Tetreault. 2018. Dear sir or madam, may I introduce the GYAFC dataset: Corpus, benchmarks and metrics for formality style transfer. In NAACL-HLT, pages 129–140. Association for Computational Linguistics.

Elizabeth Salesky, Matthias Sperber, and Alexander Waibel. 2019. Fluent translations from disfluent speech in end-to-end speech translation. In NAACL-HLT (1), pages 2786–2792. Association for Computational Linguistics.

Lifeng Shang, Zhengdong Lu, and Hang Li. 2015. Neural responding machine for short-text conversation. arXiv preprint arXiv:1503.02364.

Emily Sheng, Kai-Wei Chang, Premkumar Natarajan, and Nanyun Peng. 2019. The woman worked as a babysitter: On biases in language generation. In 2019 Conference on Empirical Methods in Natural Language Processing (EMNLP), short.

Taylor Shin, Yasaman Razeghi, Robert L. Logan IV, Eric Wallace, and Sameer Singh. 2020. Autoprompt: Eliciting knowledge from language models with automatically generated prompts. In EMNLP (1), pages 4222–4235. Association for Computational Linguistics.

Raymond Hendy Susanto, Shamil Chollampatt, and Liling Tan. 2020. Lexically constrained neural machine translation with levenshtein transformer. arXiv preprint arXiv:2004.12681.

Oriol Vinyals and Quoc Le. 2015. A neural conversational model. arXiv preprint arXiv:1506.05869.

Kevin Yang and Dan Klein. 2021. FUDGE: controlled text generation with future discriminators. In NAACL-HLT, pages 3511–3535. Association for Computational Linguistics.

Lili Yao, Nanyun Peng, Ralph Weischedel, Kevin Knight, Dongyan Zhao, and Rui Yan. 2019. Plan-and-write: Towards better automatic storytelling. In Proceedings of the AAAI Conference on Artificial Intelligence, volume 33, pages 7378–7385.

Quanzeng You, Hailin Jin, Zhaowen Wang, Chen Fang, and Jiebo Luo. 2016. Image captioning with semantic attention. In CVPR, pages 4651–4659. IEEE Computer Society.

Rowan Zellers, Ari Holtzman, Hannah Rashkin, Yonatan Bisk, Ali Farhadi, Franziska Roesner, and Yejin Choi. 2019. Defending against neural fake news. In NeurIPS, pages 9051–9062.

Hanqing Zhang, Haolin Song, Shaoyu Li, Ming Zhou, and Dawei Song. 2022. A survey of controllable text generation using transformer-based pre-trained language models. CoRR, abs/2201.05337.

Xingxing Zhang and Mirella Lapata. 2014. Chinese poetry generation with recurrent neural networks. In Proceedings of the 2014 Conference on Empirical Methods in Natural Language Processing (EMNLP), pages 670–680.

Yizhe Zhang, Guoyin Wang, Chunyuan Li, Zhe Gan, Chris Brockett, and Bill Dolan. 2020. Pointer: Constrained text generation via insertion-based generative pre-training. arXiv preprint arXiv:2005.00558.

Checklist

1. For all authors...
   (a) Do the main claims made in the abstract and introduction accurately reflect the paper's contributions and scope? [Yes]
   (b) Did you describe the limitations of your work? [Yes] We emphasize the oracle should be boolean.
   (c) Did you discuss any potential negative societal impacts of your work? [No]
   (d) Have you read the ethics review guidelines and ensured that your paper conforms to them? [Yes]

2. If you are including theoretical results...
   (a) Did you state the full set of assumptions of all theoretical results? [Yes] See Sec. 3.3
   (b) Did you include complete proofs of all theoretical results? [Yes] In the appendix
3. If you ran experiments...
   (a) Did you include the code, data, and instructions needed to reproduce the main experimental results (either in the supplemental material or as a URL)? [Yes] Data is described the appendix and code will be uploaded in supplementary materials.
   (b) Did you specify all the training details (e.g., data splits, hyperparameters, how they were chosen)? [Yes] In the appendix
   (c) Did you report error bars (e.g., with respect to the random seed after running experiments multiple times)? [No] Generation is too computational expensive
   (d) Did you include the total amount of compute and the type of resources used (e.g., type of GPUs, internal cluster, or cloud provider)? [Yes] In the appendix
4. If you are using existing assets (e.g., code, data, models) or curating/releasing new assets...
   (a) If your work uses existing assets, did you cite the creators? [Yes]
   (b) Did you mention the license of the assets? [Yes] In the appendix
   (c) Did you include any new assets either in the supplemental material or as a URL? [No]
   (d) Did you discuss whether and how consent was obtained from people whose data you're using/curating? [Yes] In the appendix
   (e) Did you discuss whether the data you are using/curating contains personally identifiable information or offensive content? [N/A]
5. If you used crowdsourcing or conducted research with human subjects...
   (a) Did you include the full text of instructions given to participants and screenshots, if applicable? [N/A]
   (b) Did you describe any potential participant risks, with links to Institutional Review Board (IRB) approvals, if applicable? [N/A]
   (c) Did you include the estimated hourly wage paid to participants and the total amount spent on participant compensation? [N/A]

A Closed-form Token-level Decomposition

A.1 Decomposition with Hard Constraints

The sequence-level solution q^* is given by

$$q^*(\mathbf{y}|\mathbf{x}) = \frac{p(\mathbf{y}|\mathbf{x})C(\mathbf{x},\mathbf{y})}{R_p^C(\mathbf{x})}.$$

Now we prove that

$$q^*(y_i|\mathbf{x},\mathbf{y}_{<i}) = \frac{R_p^C(\mathbf{x},\mathbf{y}_{<i})}{R_p^C(\mathbf{x},\mathbf{y}_{<i-1})}p(y_i|\mathbf{x},\mathbf{y}_{<i}),$$

is the unique token-level decomposition. On one hand, we verify q^* is a valid decomposition, which can be demonstrated by

$$\begin{aligned}\prod_{i=0}^{L} q^*(y_i|\mathbf{x},\mathbf{y}_{<i}) &= \prod_{i=1}^{L} \frac{R_p^C(\mathbf{x},\mathbf{y}_{<i})}{R_p^C(\mathbf{x},\mathbf{y}_{<i-1})}p(y_i|\mathbf{x},\mathbf{y}_{<i}) \\ &= \frac{R_p^C(\mathbf{x},\mathbf{y}_{<L})}{R_p^C(\mathbf{x},\mathbf{y}_{<0})}\prod_{i=0}^{L} p(y_i|\mathbf{x},\mathbf{y}_{<i}) \\ &= \frac{C(\mathbf{x},\mathbf{y})}{R_p^C(\mathbf{x})}p(\mathbf{y}|\mathbf{x}) \\ &= q^*(\mathbf{y}|\mathbf{x}),\end{aligned} \tag{10}$$

together with

$$\sum_{y_i} q^*(y_i|\mathbf{x},\mathbf{y}_{<i}) = \frac{\sum_{y_i} R_p^C(\mathbf{x},\mathbf{y}_{<i})p(y_i|\mathbf{x},\mathbf{y}_{<i})}{R_p^C(\mathbf{x},\mathbf{y}_{<i-1})} = 1 \tag{11}$$

On the other hand, we demonstrate that the decomposition is unique. We generally prove that

Lemma 3 For finite space $\mathcal{X} \times \mathcal{Y}$, if the sequence-level distribution $q(\mathbf{y}|\mathbf{x})$ is determined, the token-level distribution is unique.

Proof We assume the longest sequence in $\mathcal{Y}$ has length L, and pad all the sequence to length L by adding special token at the end. We prove the following statement by induction:

Given input $\mathbf{x}$ and prefix length i, If $q(y_i|\mathbf{x},\mathbf{y}_{<i})$ is determined, there exists a unique distribution $q(y_{i-1}|\mathbf{x},\mathbf{y}_{<(i-1)})$.

When $i = L$, it is true since $y_i \oplus \mathbf{y}_{<i}$ is the full sequence ($\oplus$ denotes the string concatenation), hence $q(y_i|\mathbf{x},\mathbf{y}_{<i}) \propto q(y_i \oplus \mathbf{y}_{<t}|\mathbf{x})$. $q(y_i \oplus \mathbf{y}_{<t}|\mathbf{x})$ is the determined sequence-level distribution, so $q(y_i|\mathbf{x},\mathbf{y}_{<i})$ is unique.

Assume the statement holds when $i >= t$, we consider $i = t-1$. The distribution of prefixes with length $t-1$ is given by

$$q(\mathbf{y}_{<(t-1)}|\mathbf{x}) \propto \frac{q(\mathbf{y}|\mathbf{x})}{\prod_{j=t}^{L} q(y_j|\mathbf{x},\mathbf{y}_{<j})}.$$

Since the sequence distribution and token-level distribution after step t are determined, the prefix distribution is also determined. Thus, the token-level distribution at step $(t-1)$ has unique solution

$$q(y_{t-1}|\mathbf{x},\mathbf{y}_{<(t-1)}) \propto q(\mathbf{y}_{<(t-1)}|\mathbf{x}).$$

A.2 Closed-form Solution and Decomposition with Soft Constraints

To deal with soft constraints, we define the feasible set Q as

$$Q := \{q| \sum\nolimits_{\mathbf{y}:\ C(\mathbf{x},\mathbf{y})=0} q(\mathbf{y}|\mathbf{x}) = r\}.$$

The sequence-level solution is given b

$$
\begin{aligned}
q^*(\mathbf{y}|\mathbf{x}) &= \arg\min_{q\in Q} KL(p(\mathbf{y}|\mathbf{x})\|q(\mathbf{y}|\mathbf{x})) \\
&= \arg\min_{q\in Q}\left[\sum_{\mathbf{y}:C(\mathbf{x},\mathbf{y})=0} p(\mathbf{y}|\mathbf{x})\log\frac{q(\mathbf{y}|\mathbf{x})}{p(\mathbf{y}|\mathbf{x})} + \sum_{\mathbf{y}:C(\mathbf{x},\mathbf{y})=1} p(\mathbf{y}|\mathbf{x})\log\frac{q(\mathbf{y}|\mathbf{x})}{p(\mathbf{y}|\mathbf{x})}\right]
\end{aligned}
$$

The optimal distribution q^* should be proportional to p in both term, respectively. Since $\sum_{\mathbf{y}:C(\mathbf{x},\mathbf{y})=1} p(\mathbf{y}|\mathbf{x}) = R_p^C(\mathbf{x})$, we have

$$
q^*(\mathbf{y}|\mathbf{x}) = \begin{cases} \frac{1-r}{1-R_p^C(\mathbf{x})}p(\mathbf{y}|\mathbf{x}) & C(\mathbf{x},\mathbf{y})=0 \\ \frac{r}{R_p^C(\mathbf{x})}p(\mathbf{y}|\mathbf{x}) & C(\mathbf{x},\mathbf{y})=1 \end{cases}
$$

We denote $\alpha = \frac{r}{R_p^C(\mathbf{x})}$, $\beta = \frac{1-r}{1-R_p^C(\mathbf{x})}p(\mathbf{y}|\mathbf{x})$. Now the sequence-level optimal distribution is determined, by Lemma 3, we have a unique token-level decomposition. Now we verify

$$
q^*(y_i|\mathbf{x},\mathbf{y}_{<i}) = \frac{\alpha R_p^C(\mathbf{x},\mathbf{y}_{<i}) + \beta(1-R_p^C(\mathbf{x},\mathbf{y}_{<i}))}{\alpha R_p^C(\mathbf{x},\mathbf{y}_{<i-1}) + \beta(1-R_p^C(\mathbf{x},\mathbf{y}_{<i-1}))}p(y_i|\mathbf{x},\mathbf{y}_{<i})
$$

is exactly what we want. We have

$$
\begin{aligned}
\prod_{i=1}^{L} q^*(y_i|\mathbf{x},\mathbf{y}_{<i}) &= \prod_{i=1}^{L}\frac{\alpha R_p^C(\mathbf{x},\mathbf{y}_{<i}) + \beta(1-R_p^C(\mathbf{x},\mathbf{y}_{<i}))}{\alpha R_p^C(\mathbf{x},\mathbf{y}_{<i-1}) + \beta(1-R_p^C(\mathbf{x},\mathbf{y}_{<i-1}))}p(y_i|\mathbf{x},\mathbf{y}_{<i}) \\
&= \frac{\alpha R_p^C(\mathbf{x},\mathbf{y}_{<L}) + \beta(1-R_p^C(\mathbf{x},\mathbf{y}_{<L}))}{\alpha R_p^C(\mathbf{x}) + \beta(1-R_p^C(\mathbf{x}))}\prod_{i=1}^{L}p(y_i|\mathbf{x},\mathbf{y}_{<i}) \\
&= \frac{\beta + (\alpha-\beta)C(\mathbf{x},\mathbf{y})}{r+(1-r)}p(\mathbf{y}|\mathbf{x}) \\
&= q^*(\mathbf{y}|\mathbf{x}),
\end{aligned}
$$

and

$$
\sum_{y_i} q^*(y_i|\mathbf{x},\mathbf{y}_{<i}) = 1,
$$

since

$$
\sum_{y_i} R_p^C(\mathbf{x},\mathbf{y}_{<i}))p(y_i|\mathbf{x},\mathbf{y}_{<i}) = R_p^C(\mathbf{x},\mathbf{y}_{<i-1}).
$$

Therefore, q^* is the unique solution.

B Proof of the Error Bounds

Here we prove the bounds in Lemma 1 and Lemma 2. [3]

Proof of Lemma 1 We denote $Z_i(\mathbf{x},\mathbf{y})$ as the normalization term in distribution $q(y_i|\mathbf{x},\mathbf{y}_{<i})$, i.e.,

$$
q(y_i|\mathbf{x},\mathbf{y}_{<i}) = \frac{1}{Z_i(\mathbf{x},\mathbf{y})}\frac{R_\theta(\mathbf{x},\mathbf{y}_{<i})}{R_\theta(\mathbf{x},\mathbf{y}_{<i-1})}p(y_i|\mathbf{x},\mathbf{y}_{<i}),
$$

$$
Z_i(\mathbf{x},\mathbf{y}) = \sum_{y_i}\frac{R_\theta(\mathbf{x},\mathbf{y}_{<i})}{R_\theta(\mathbf{x},\mathbf{y}_{<i-1})}p(y_i|\mathbf{x},\mathbf{y}_{<i}).
$$

Since $\frac{1}{\delta} < \frac{R_\theta(\mathbf{x},\mathbf{y}_{<i})}{R_p^C(\mathbf{x},\mathbf{y}_{<i})} < \delta$,

$$
Z_i(\mathbf{x},\mathbf{y}) < \sum_{y_i}\delta^2\frac{R_p^C(\mathbf{x},\mathbf{y}_{<i})}{R_p^C(\mathbf{x},\mathbf{y}_{<i-1})}p(y_i|\mathbf{x},\mathbf{y}_{<i}) = \delta^2.
$$

[3] There are typos in the main text. Here we correct them. The typos do not affect related conclusions.

Similarly, $Z_i(\mathbf{x}, \mathbf{y}) > \frac{1}{\delta^2}$.

The sequence-level distribution is given by

$$q(\mathbf{y}|\mathbf{x}) = \prod_{i=1}^{L} q(y_i|\mathbf{x}, \mathbf{y}_{<i}) = \frac{1}{\prod_{i=1}^{L} Z_i(\mathbf{x}, \mathbf{y})} \frac{R_\theta(\mathbf{x}, \mathbf{y}_{<L})}{R_\theta(\mathbf{x})} p(\mathbf{y}|\mathbf{x}).$$

Now we bound the KL-divergence as

$$\begin{aligned} KL(q^*(\mathbf{y}|\mathbf{x}) \| q(\mathbf{y}|\mathbf{x})) &= \sum_{\mathbf{y} \in \mathcal{Y}} q^*(\mathbf{y}|\mathbf{x}) \log \left(\frac{q(\mathbf{y}|\mathbf{x})}{q^*(\mathbf{y}|\mathbf{x})} \right) \\ &= \sum_{\mathbf{y}: C(\mathbf{x},\mathbf{y})=1} q^*(\mathbf{y}|\mathbf{x}) \log \left(\frac{1}{\prod_{i=1}^{L} Z_i(\mathbf{x}, \mathbf{y})} \frac{R_\theta(\mathbf{x})}{R_p^C(\mathbf{x})} \frac{C(\mathbf{x}, \mathbf{y})}{R_\theta(\mathbf{x}, \mathbf{y}_{<L})} \right) \\ &< \sum_{\mathbf{y}: C(\mathbf{x},\mathbf{y})=1} q^*(\mathbf{y}|\mathbf{x}) \log(\delta^{(2L+2)}) \\ &< (2L+2) \log \delta. \end{aligned}$$

Proof of Lemma 2 With additional condition, $Z_i(\mathbf{x}, \mathbf{y}) = 1$.. Hence the bound is $2 \log \delta$.

C Experiment Details

C.1 Datasets

In MT formality change experiment, we use Fisher and Callhome Spanish-English translation dataset (Post et al., 2013) and GYAFC formality corpus (Rao and Tetreault, 2018). Both of the datasets are not public. Fisher and Callhome dataset is owned by LDC. To acquire the GYAFC dataset, one need to first gain access to Yahoo Answers corpus.

For unsupervised LCG experiments, we use Yelp Reviews (Cho et al., 2018) and WMT News section datasets (Bojar et al., 2017; Guo et al., 2018). Yelp Reviews is published under its own license [4]. Please refer to the official website of WMT dataset (Bojar et al., 2017) for more information about licenses and legal concerns. We conduct our experiment of supervised LCG on the CommonGen dataset (Lin et al., 2020), whose official repository is published under MIT license.

C.2 Hyperparameters and Training Details

For MT experiments, we load the MarianMT from the es-en checkpoint provided by huggingface. We set a constant learning rate $1e-5$. The NADO shares the encoder with MarianMT, and use MarianDecoder as the decoding architecture. Compared to the 12-layer decoder in MarianMT, we a use 3-layer decoder, and the other configurations follow the Marian decoder. The fully connected output layer is zero initialized. We set the coefficient $\lambda = 0.1$ for the regularization, which is selected from $\{0.01, 0.03, 0.1, 0.3, 1.0\}$. All the hyperparameters are tuned on the development set. We select the best NADO model evaluated on development set in 10-epoch training.

For LCG experiments, we finetune our base models from a GPT-2-Large checkpoint (Radford et al., 2019) for 3 epochs with learning rate $1e-5$. We use a warmup number of 400 and the learning rate decays to 0 in 5000000 steps (which are far more than the actually executed ones). We use NADO to train the auxiliary R models (4-layer, 768-D, 12 headed transformer) with a learning rate of $2e-5$, which is selected from $\{1e-5, 2e-5, 5e-5\}$. We zero-initialize the output layer of auxiliary models. No learning warmup/decay is applied when training R. With the help of KL-regularization, we set $\lambda = 1.0$ and we don't observe very severe overfitting in the second stage of NADO training. We simply report the results after the maximum number of training epochs (usually 20).

For more implementation details and tricks, please refer to our code. [5]

[4] See full license file here.

[5] https://github.com/MtSomeThree/constrDecoding

Table 3: Some qualitative generation results in machine translation formality change experiments. NADO controls the model to be more formal by skipping informal words, fixing the grammar, capitalizing the first letters in base model generation results, etc. Noting that the zero-shot base model can not handle the repeated words in casual source language very well, we observe that the NADO-controlled model, which follows the base model distribution, cannot handle it, either.

Constraint:	The generated (translated) texts should be fluent and formal.
Source	Lo, y las eh usted dice que usted toca instrumentos, eh es- ¿usted su esposo tocan como en una banda, un grupo?
MarianMT	**What**, and **the uh, you say** you play instruments, uh, you're– you're your husband playing like a band, a band?
NADO	**So**, and **you're saying that** you play instruments, uh, you're– you're your husband playing like **in** a band, a band?
Formal Ref.	So, you say you play instruments, you and your husband play in a band or group?
Source	Entonces, ya los programas ya, ya están clasificados, ya ver una escena de de pornografía en la televisión a cualquier hora del día es normal. Y ya para muchos
MarianMT	So, **already the programs are already classified**, and seeing a porn scene on TV at any time of the day is normal. **And already for many**
NADO	So, **the programs already, they're already classified**, and seeing a porn scene on TV at any time of the day is normal.
Formal Ref.	The programs, are classified, to see a scene of pornography on the television at anytime of the day is normal. And for many
Source	donde hay problemas
MarianMT	**where** there's trouble.
NADO	**Where** there's trouble.
Formal Ref.	That's when trouble arises.

C.3 Computational Resources

We run the MT experiments on a NVIDIA GeForce RTX 2080 Ti GPU. We run LCG experiments on a NVIDIA A6000 GPU.

D Qualitative Generation Results

D.1 Machine Translation Formality Change Experiments

In Tab.3 we show some translation text in the best system (NADO+Sampling with $T = 5/4$) and baseline (MarianMT), together with the source and its formal reference.

D.2 Lexical Constrained Generation Experiments

In Tab.3 we show some generated text in best systems and baselines, together with the golden references.

Table 4: Some qualitative generation results in LCG experiments. NADO focuses on making sure all the constraints are imposed, or at least ensuring as many as possible of them. This is in particular more obvious when using weaker base models (e.g. GPT-2-base).

Constraint:	The generated texts should contain all the given concepts in arbitrary order
Concepts	**kid room dance**
Base Model	A boy and girl **dancing** in a **room**. (~~**kid**~~)
NADO	A **kid** is **dancing** in the **room**.
Golden Ref. #1	The silly **kid** loves to **dance** in her **room**.
Golden Ref. #2	the **dance kid**: **room** is full of **kids**
Golden Ref. #3	A **kid** is **dancing** in the **room**.
Golden Ref. #4	A group of **kids** are **dancing** around a living **room**.
Concepts	**create pottery wheel**
Base Model	add a **pottery wheel** to your home. (~~**create**~~)
NADO	**create** a **pottery wheel** in the garden
Golden Ref. #1	**Create pottery** with a **wheel** and clay.
Golden Ref. #2	I **create pottery** on a **wheel**.
Golden Ref. #3	A **pottery wheel** can be used to **create** bowls.
Golden Ref. #4	A man is using a **wheel** to **create pottery**.
Concepts	**bed look sit**
Base Model	A man is **sitting** on a **bed**. (~~**look**~~)
NADO	A man **sits** on a **bed** and **looks** at his reflection in the mirror.
Golden Ref. #1	The girl was **sitting** in the couch and **looking** at a bed in a catalog.
Golden Ref. #2	the woman **look** at her **bed** as she **sits**.
Golden Ref. #3	The man **sat** on the **bed** and **looked** out the window
Golden Ref. #4	**Looking** dejected, someone **sits** on his **bed**.